HAL
open science

Contribution of anthropogenic phosphorus to agricultural soil fertility and food production

Bruno Ringeval, B. Nowak, T. Nesme, Magalie Delmas, S. Pellerin

To cite this version:

Bruno Ringeval, B. Nowak, T. Nesme, Magalie Delmas, S. Pellerin. Contribution of anthropogenic phosphorus to agricultural soil fertility and food production. Global Biogeochemical Cycles, 2014, 28 (7), pp.743-756. 10.1002/2014GB004842 . hal-01708838

HAL Id: hal-01708838

https://hal.science/hal-01708838v1

Submitted on 14 Feb 2018

HAL is a multi-disciplinary open access archive for the deposit and dissemination of scientific research documents, whether they are published or not. The documents may come from teaching and research institutions in France or abroad, or from public or private research centers.

L'archive ouverte pluridisciplinaire **HAL**, est destinée au dépôt et à la diffusion de documents scientifiques de niveau recherche, publiés ou non, émanant des établissements d'enseignement et de recherche français ou étrangers, des laboratoires publics ou privés.

AGU PUBLICATIONS

Global Biogeochemical Cycles

RESEARCH ARTICLE
10.1002/2014GB004842

Key Points:
- Anthropogenic P contribution to French agricultural soil fertility is assessed
- In 2009, 68–91% of soil P involved in plant nutrition was anthropogenic
- This is related to the integral of chemical fertilizer use over time

Supporting Information:
- Readme
- Text S1-S9, Table S1 and Figures S1-S5
- ScriptS1.zip

Correspondence to:
B. Ringeval,
bruno.ringeval@bordeaux.inra.fr

Citation:
Ringeval, B., B. Nowak, T. Nesme, M. Delmas, and S. Pellerin (2014), Contribution of anthropogenic phosphorus to agricultural soil fertility and food production, *Global Biogeochem. Cycles*, *28*, 743–756, doi:10.1002/2014GB004842.

Received 3 MAR 2014
Accepted 19 JUN 2014
Accepted article online 24 JUN 2014
Published online 17 JUL 2014

Contribution of anthropogenic phosphorus to agricultural soil fertility and food production

B. Ringeval[1,2], B. Nowak[1,2], T. Nesme[1,2,3], M. Delmas[4], and S. Pellerin[1,2]

[1]INRA, UMR 1391 ISPA, Villenave d'Ornon, France, [2]Bordeaux Sciences Agro, University of Bordeaux, UMR 1391 ISPA, Gradignan, France, [3]McGill School of Environment, McGill University, Montreal, Quebec, Canada, [4]Montpellier SupAgro, UMR LISAH, Montpellier, France

Abstract Agricultural intensification over the last few decades has been accompanied by the extensive use of anthropogenic phosphorus (P) derived from mined phosphate rock. Given the increasing scarcity of P resources, accurate estimates of the reliance of agriculture on anthropogenic P are required. Here we propose a modeling approach for assessing the contribution of anthropogenic P to agricultural soil fertility and food production. We performed computations at country level, and France was chosen as a typical western European country with intensive agriculture. Four soil P pools were identified based on their bioavailability (labile versus stable) and origin (anthropogenic versus natural). Pool evolution between 1948 and 2009 was estimated by combining international databases and a simple biogeochemical model. An optimization procedure demonstrated the necessity of representing a stable P pool capable of replenishing the labile pool within 14 to 33 years in order to match country-scale observations. Mean simulated P pool sizes for 2009 (0–35 cm soil horizon) were 146, 616, 31, and 156 kgP/ha for natural stable, anthropogenic stable, natural labile, and anthropogenic labile pools, respectively. We found that, on average, 82% (min-max: 68–91%) of soil P (sum of labile and above defined stable) in that year was anthropogenic. The temporal evolution of this contribution is directly related to the integral of chemical fertilizer use over time, starting from 1948. The contribution of anthropogenic P to food production was similar at 84% (min-max: 72–91%), which is greater than budget-based estimates (~50–60%) commonly reported in the literature. By focusing on soil fertility and food production, this study provides a quantitative estimation of human perturbations of the P cycle in agroecosystems.

1. Introduction

Since the end of the Second World War, the doubling of global cereal production has been associated with a significant increase in the use of nitrogen (N) fertilizers and that of phosphorus (P) fertilizers by 7 and 3.5 times, respectively [*Tilman et al.*, 2002]. The ever-rising demand for food/feed/fuel/fiber coupled with the increasing scarcity of resources for fertilizer production has led to the question of the reliance of agriculture on chemical fertilizers [*Tilman*, 2001; *Vitousek et al.*, 2009]. In the literature, efforts to quantify this reliance at large spatial scales (country and larger) are generally based on ratios computed for a given year, e.g., the ratio of chemical fertilizers spread on agricultural soils to overall soil nutrient inputs, or the ratio of chemical fertilizers to nutrients contained in harvested products. Working mainly with the chemical fertilizer : overall-soil-N-inputs ratio, *Smil* [1999, 2002] found that 40% of dietary protein originated from chemical N fertilizer at the global scale. Currently, there are no such figures for P, and yet it has been proposed that future scarcity of this resource could threaten soil fertility, agricultural production, and food security [*Cordell*, 2010; *Van Vuuren et al.*, 2010; but see *Scholz and Wellmer*, 2013; *Van Kauwenbergh*, 2010]. Unfortunately, any attempt to calculate similar per-given-year ratios for P would only provide biased estimates because P, unlike N, accumulates in soils. P contained in chemical fertilizers is commonly called *anthropogenic P*; it is extracted from phosphate rock and subsequently subjected to an industrial treatment to increase its solubility via a chemical reaction with an acid. Twenty three megatons of P (equivalent to 178.5 Mt of phosphate rock) are currently mined every year in only a handful of countries (mainly China, the USA, and Morocco) but are used all over the world with large heterogeneities [*Vitousek et al.*, 2009; *MacDonald et al.*, 2011]. Globally speaking, 90% of anthropogenic P is used for food production as fertilizer (~82%) and feed additives (~8%), while the remainder is used as detergent [*International Fertilizer Industry Association*, 2011].

©2014. American Geophysical Union. All Rights Reserved.

In this paper, we address the issue of the reliance of soil fertility and food production on anthropogenic P at large spatial scales through a modeling approach. While this reliance may be partially assessed at the field scale through long-term in situ experiments [e.g., *Blake et al*., 2003], it would be difficult to extend such conclusions to large spatial scales because of specific field features pertaining to soil order, soil texture, and crop management. Moreover, unlike N [*Sebilo et al*., 2013], the only stable P isotope is naturally preponderant, which makes it impossible to use a tracer to track the long-term fate of anthropogenic P. In light of these difficulties, we built a simple biogeochemical model aimed at estimating (i) the historical evolution of the P fertility status of agricultural soils and (ii) the individual contributions of natural and anthropogenic P to the current nutrient status. We focused on the country scale, which is a relevant scale for assessing nutrient management [*Senthilkumar et al*., 2012b]. France was chosen as a typical Western European country with a history of intensive agriculture and strong reliance on chemical fertilizers spanning the last few decades.

2. Materials and Methods

2.1. Overview

We developed a simple representation of the complex dynamics of P cycling in agricultural soils. The system that was modeled comprised an agricultural soil averaged across France, corresponding to a depth of 0–35 cm over both cropland and grassland. We did not distinguish cropland and grassland because the required information to model them separately was not available. P pool sizes and fluxes were expressed in kgP/ha and kgP/ha/yr, respectively. We ran the model on 1 year time intervals and focused on soil P pool sizes at the end of each growing season. We performed simulations for the 1948–2009 period, which has been associated with a massive rise in chemical fertilizer use until the mid-70s, followed by a sharp decline thereafter. Because of the selected spatial scale, we decided on a simple representation of the complex dynamics of P cycling in soils. This consisted in classifying soil P into two pools based on lability (LP: labile and SP: stable), much like the approach used by *Wolf et al*. [1987] and *Sattari et al*. [2012], followed by an additional distinction according to P origin (Ant: anthropogenic and Nat: natural). Thus, four kinds of pools were considered in all: LP_{Nat}, LP_{Ant}, SP_{Nat}, and SP_{Ant} (Figure 1). Assuming the plant uptake of P to be entirely derived from labile pools, LP was considered to be bioavailable P for plants, commonly defined as the sum of P in solution and P that may be replenished during a growing season [*Harmsen et al*., 2005]. The stable pool served as a slow-release buffer that replenished the labile pool.

Pool evolution between 1948 and 2009 was estimated by combining international databases with our model. The model was used to calculate the status and anthropogenic fraction of soil P according to different inflows and outflows (Figure 1). Following *Dumas et al*. [2011], there are two key relationships in the agricultural P cycle: (i) the relationship between bioavailable and stable P within soils and (ii) the relationship between bioavailable soil P and P in harvested products (hereafter referred to as *P exports*). These fluxes were explicitly simulated. The simulation of P exports provided an estimate of the initial soil P pool size (i.e., at the beginning of the simulation) that was consistent with observations of exports, thereby avoiding uncertainty-related issues in the initial conditions. On the other hand, this explicit simulation required us to assign a value to certain parameters that were difficult to estimate at the country scale—parameters that had the potential to significantly influence the simulated current soil pools and anthropogenic contributions. To overcome this difficulty, we optimized these parameter values by using certain observations representative of France as constraints. More specifically, we calibrated the model (i) to mimic the observed temporal evolution of P exports from harvested crops over the study period and (ii) to make the simulated labile pool size at the end of this period match the P-Olsen measurement given by the French Soil Quality Monitoring Network [*Réseau de Mesures de la Qualité des Sols*, 2009]; [*Arrouays et al*., 2002; *Jolivet et al*., 2006]. One of the optimized parameters was $\mu_{SP\rightarrow LP}$ (yr^{-1}), which characterizes the transfer from SP to LP and plays a key role in the meaning of the represented SP.

The main P inputs to agricultural soils considered in this model correspond to both chemical and organic (animal manure and sludges produced during wastewater treatment and applied to agricultural soil) fertilizers. While all P in chemical fertilizer was considered to be anthropogenic by definition, the proportion of anthropogenic to natural P in organic fertilizer had to be estimated. This was achieved by determining the anthropogenic versus natural composition of various intermediate fluxes (feed and fodder, mineral feed, manures, etc.). To do so, we derived the intensity of total fluxes from country-scale data sets and explicitly computed their anthropogenic versus natural composition. In the following, for a

©2014. American Geophysical Union. All Rights Reserved.

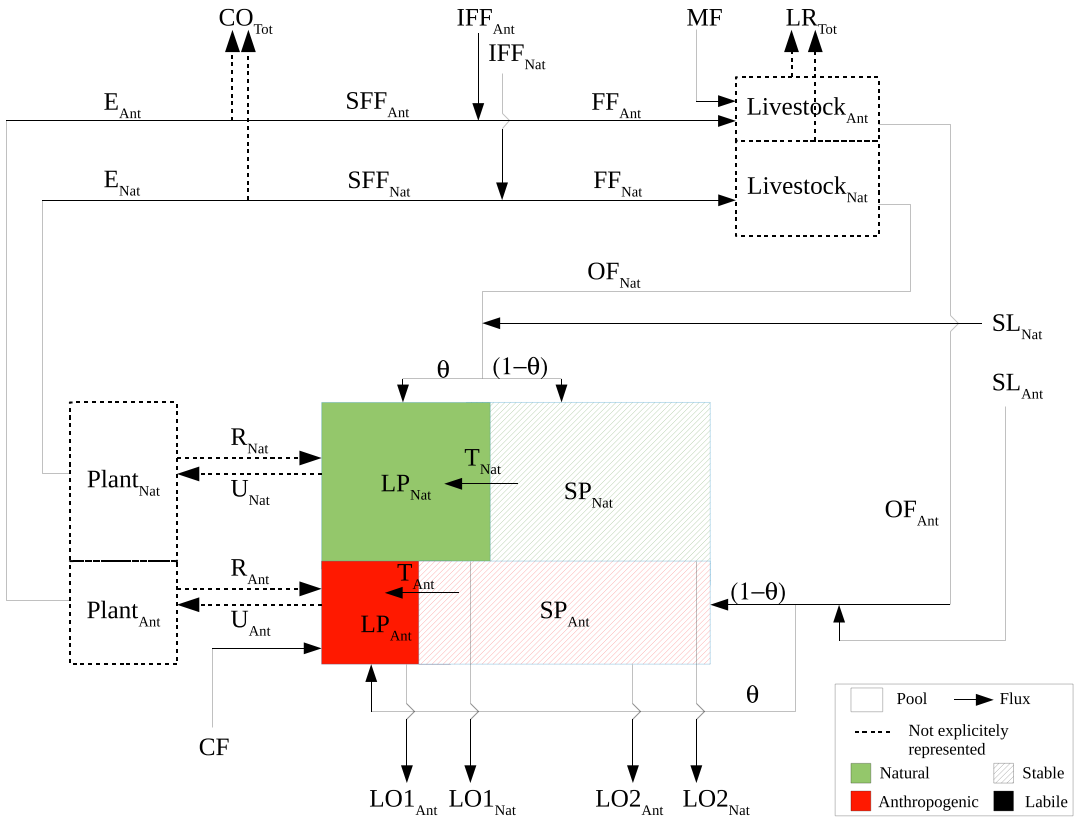

Figure 1. Model design. The model aims to simulate labile (LP, solid color) and stable (SP, hatch pattern) soil P pools of both natural (green) and anthropogenic (red) origin. It should be noted that the relative size of plotted pools and fluxes is of no significance. The P fluxes considered are U (uptake), R (crop residue), export from agricultural soil (E), net transfer from stable to labile pool (T), chemical fertilizer (CF), crops consumed by French population or exportation (CO), imported feed and fodder (IFF), self-produced feed and fodder (SFF), feed and fodder (FF, including both SFF and IFF), mineral feed (MF), livestock product (LR), organic fertilizer (OF), spread sludges (sludges derived from wastewater treatment and applied to agricultural soil, SL), and losses to water bodies (LO). The P stocks considered are vegetation on cropland and grassland (plant), livestock (livestock), labile/bioavailable soil pool (LP), and stable/nonbioavailable soil pool (SP). The subscripts Nat and Ant refer, respectively, to the natural and anthropogenic components of each flux/pool.

given flux or pool X, X_{Tot} is defined as the sum $X_{\mathrm{Nat}}+X_{\mathrm{Ant}}$, while the *anthropogenic signature* of a flux X is defined as the proportion of X of anthropogenic origin (i.e., $X_{\mathrm{Ant}}/X_{\mathrm{Tot}}$).

2.2. Evolution of Soil P Pools

The temporal evolution of each soil pool ($\mathrm{LP_{Nat}}$, $\mathrm{LP_{Ant}}$, $\mathrm{SP_{Nat}}$, and $\mathrm{SP_{Ant}}$) can be described by the following set of equations:

$$\mathrm{LP_{Nat}}(n+1)=\mathrm{LP_{Nat}}(n)+\theta\cdot[\mathrm{OF_{Nat}}(n)+\mathrm{SL_{Nat}}(n)]-\mathrm{E_{Nat}}(n)-\mathrm{LO1_{Nat}}(n)+\mathrm{T_{Nat}}(n) \tag{1a}$$

$$\mathrm{LP_{Ant}}(n+1)=\mathrm{LP_{Ant}}(n)+\mathrm{CF}(n)+\theta\cdot[\mathrm{OF_{Ant}}(n)+\mathrm{SL_{Ant}}(n)]-\mathrm{E_{Ant}}(n)-\mathrm{LO1_{Ant}}(n)+\mathrm{T_{Ant}}(n) \tag{1b}$$

$$\mathrm{SP}_Y(n+1)=\mathrm{SP}_Y(n)+(1-\theta)\cdot[\mathrm{OF}_Y(n)+\mathrm{SL}_Y(n)]-\mathrm{LO2}_Y(n)-\mathrm{T}_Y(n)\ \text{ where }\ Y=\{\mathrm{Nat},\mathrm{Ant}\}. \tag{1c}$$

In these equations, n represents a given year and E, CF, OF, SL, and T denote, respectively, exports, chemical fertilizer, organic fertilizer, sludges, and net transfers from stable to labile pools (Figure 1). LO1 and LO2 correspond to losses to water bodies from labile and stable pools, respectively. Overall, system losses (LO1 + LO2) are hereafter referred to as LO. Parameter θ represents the bioavailable fraction of sludges and manures. E and T were simulated (computation given below) while the other fluxes were obtained from international databases (Text S1 and Fig. S1 in the supporting information). The computation of the anthropogenic versus natural composition of all the fluxes is described below. A summary of the computation of total fluxes and a breakdown of their composition is available in Table S1 in the supporting

©2014. American Geophysical Union. All Rights Reserved.

Table 1. Equation Parameters[a]

Parameter	Description	Equation	Value	Unit
θ	Bioavailable fraction of P sludges (SL_{Tot}) and manures (OF_{Tot})	1	0.8 [*Sattari et al.*, 2012]	-
k	Fraction of P uptake that goes into crop residues	2	Not required	-
β	Potential P export if no P limitation (limit when $LP_{Tot} \rightarrow$ inf)	3	Optimized	kgP/ha/yr
γ	Adjusts the size of LP required to tend to β	3	Optimized	ha/kgP
$\mu_{SP \rightarrow LP}$	Coefficient of P transfer from stable to labile pool	5	Optimized	yr^{-1}
$\mu_{LP \rightarrow SP}$	Coefficient of P transfer from labile to stable pool	5	0.2 [*Sattari et al.*, 2012]	yr^{-1}
p	Proportion of soil P that is lost through erosion + runoff each year	6	Tuned to match estimates of losses over 1999–2009	yr^{-1}
fdet	Detergent fraction of P in plant treatment sludges	7	0.39 [*Senthilkumar et al.*, 2012b]	-
δ	Fraction of P in imported feed and fodder (IFF_{Tot}) with s_1 anthropogenic signature	8	Soy fraction of importation	-
s_1	Anthropogenic signature of IFF_{Tot} fraction δ	8	0	-

[a]"Optimized" means that the parameter value has been estimated through the procedure described in section 2.7.

information. The parameters that were used are shown in Table 1. Our model has been designed such that within a given time step, the soil pools receive first inputs (CF, OF, SL); then exports, losses, and transfers between soil pools are computed successively. The required scripts were written in R [*R Core Team*, 2012] and are made available in the supporting information (ScriptS1.zip).

2.3. Simulated Fluxes

P exported from agricultural soil through harvests (E_{Tot}) could have been obtained from French sources [e.g., *Annuaire rétrospectif de la France 1948-1988, INSEE*, 1990] as well as international databases such as the *FAOSTAT* [2013] database (see Text S1 in the supporting information). But in that case, natural soil P pool sizes in 1948 (hereafter referred to as the *initial conditions*) would have been required, along with a few options to constrain them. Given the large uncertainty in estimating this pool size for an average agricultural soil at the country scale, we chose instead to model E. We made the parameters involved in this computation vary in their range of uncertainty. For a given set of parameter values, the initial conditions were determined by matching the observed and simulated E during the first time step (i.e., in 1948). The range of variation of E parameters was then narrowed down through an optimization procedure, which is detailed in one of the following sections.

In France, ~55% of the Used Agricultural Area (UAA) is covered by annual crops while grasslands represent an additional 38% of the agricultural area [*AGRESTE*, 2010]. Given the predominance of annual crops over pluriannual crops and due to the reduced biomass of grasslands in winter, we chose to assume that the plant P pool was zero at the end of each year. This implied that $Plant_{Tot}$ (see Figure 1 caption and Table S1 for definition) did not vary from year to year, and that its annual inputs (uptake, U) and outputs (E and crop residues, R) were always balanced: $E_{Tot} + R_{Tot} = U_{Tot}$. By assuming crop residue to be proportional to uptake, i.e., $R_{Tot} = k \cdot U_{Tot}$ where k is a constant, we obtained the following:

$$E_{Tot} = (1 - k) \cdot U_{Tot}. \tag{2}$$

The uptake of P by crops could then be expressed as a function of the bioavailable P pool. As long as P strongly limited yield, there was a linear relationship between LP_{Tot} and U_{Tot}. However, such circumstances are rarely encountered in France and we chose instead to work with an alternative relationship leading to the following:

$$E_{Tot} = \beta\left(1 - e^{-\gamma LP_{Tot}}\right), \tag{3}$$

where (β,γ) are constants.

β represents the potential exports without any P limitation while γ adjusts the amount of labile P required to tend to β. It should be noted that LP_{Tot} in this equation corresponds to the LP_{Tot} at the beginning of the time step plus the input (CF, OF, and SL) to the soil during this time step. An additional assumption was required to estimate the contribution of anthropogenic and natural labile pools to E_{Tot}. For the sake of

©2014. American Geophysical Union. All Rights Reserved.

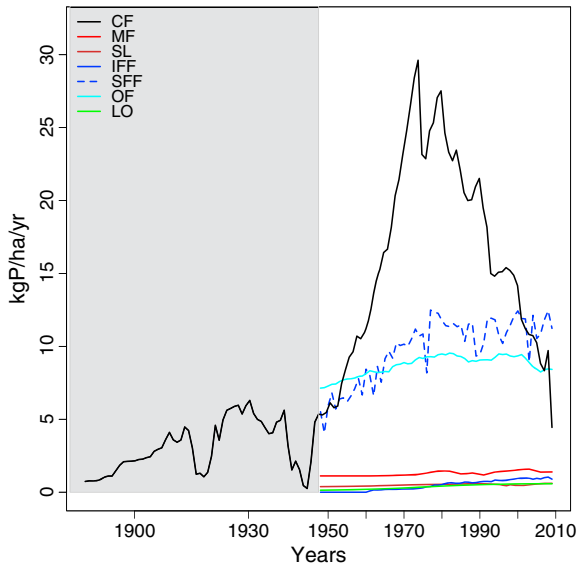

Figure 2. Evolution of the nonsimulated fluxes over the 1948–2009 period: CF (chemical fertilizer), MF (mineral feed), SL (sludges), IFF (imported feed and fodder), SFF (self-produced feed and fodder), OF (organic fertilizer), and LO (losses). Although the present study focuses on the white area (the gray area is beyond the scope of this paper), the use of chemical fertilizer over the 1887–1947 period is also given (see section 4.5).

simplicity, the contribution of the anthropogenic labile pool to total exports was expressed as a function of its contribution to the total labile pool, i.e.,

$$E_{Ant} = \frac{LP_{Ant}}{LP_{Tot}} \cdot E_{Tot}. \quad (4)$$

Another flux that was modeled was the transfers between stable and labile pools. The stable pool served as a slow-release buffer that replenished the labile pool. We also took into account a transfer in the opposite direction, i.e., from labile to stable, which includes all processes that reduce the availability of labile P. According to *Sattari et al.* [2012], the net transfer from the stable to labile pool can be determined by the following:

$$T_Y = \mu_{SP\to LP} \cdot SP_Y - \mu_{LP\to SP} \cdot LP_Y, \quad (5)$$

where $Y = \{Nat,Ant\}$.

Both $\mu_{SP\to LP}$ and parameters involved in the computation of E (i.e., β,γ) were optimized.

2.4. Nonsimulated Fluxes

The fluxes that were not simulated were P fluxes in chemical fertilizer, manures, feed and fodder, spread sludges, and losses, all of which were estimated from available data sets or observations by multiplying the material fluxes by the corresponding P content. Information about the material fluxes was obtained by combining different sources in international [e.g., *FAOSTAT*, 2013] and national databases [e.g., *Annuaire rétrospectif de la France 1948-1988, INSEE*, 1990]. More details are given in the supporting information (Text S1 and Fig. S1). The evolution of the nonsimulated fluxes over the 1948–2009 period is given in Figure 2.

P losses (LO_{Tot}) corresponded to the transfers to the environment and water bodies through (i) erosion + runoff and (ii) leaching processes. The uncertainty about the magnitude of these fluxes is relatively high [*Jetten et al.*, 2003], but leaching can usually be neglected with respect to erosion + runoff processes [*Senthilkumar et al.*, 2012b]. We then assumed that the difference between the total P measured at the outlets of the major river basins of France and the P discharged by isolated sources (wastewater treatment plants and industry) into rivers gave an estimation of diffuse P losses. Diffuse P losses encompass losses from both nonagricultural (defined as forest, urban areas, etc.) and agricultural soils. We assumed that the contribution of nonagricultural soils was insignificant compared to that of agricultural soils, in accordance with observations at various scales [*Cooke and Prepas*, 1998; *Elrashidi et al.*, 2008; *Cerdan et al.*, 2010]. P losses from agricultural soil at the country scale were estimated to be 0.59 kgP/ha/yr during 1999–2009. These losses were incorporated in the model by means of a proportional relationship between total losses (LO_{Tot}) and simulated soil P ($LP_{Tot} + SP_{Tot}$)

$$LO_{Tot} = p \cdot (LP_{Tot} + SP_{Tot}), \quad (6)$$

where p (yr^{-1}) is the proportion of soil P that is lost each year; p was calibrated such that the simulated losses were 0.59 kgP/ha/yr for 1999–2009. Losses corresponding to each soil pool (LP_{Nat}, LP_{Ant}, SP_{Nat}, and SP_{Ant}) were then computed by multiplying LO_{Tot} by the contribution of each soil pool to ($LP_{Tot} + SP_{Tot}$). More details are given in the supporting information (Text S3).

All fluxes were expressed in kgP/ha/yr. The Used Agricultural Area (UAA) from *FAOSTAT* [2013] was used to compute each flux per hectare of agricultural soil. Since the French UAA varied only slightly over the 1948–2009 period (by as much as 17% with respect to the mean value for the whole period), we assumed that the conversion of land to agricultural soils had only a minor effect on the soil P pools.

©2014. American Geophysical Union. All Rights Reserved.

2.5. Anthropogenic Signature of Fluxes

After computing the magnitude of each total flux, we estimated the individual contributions of anthropogenic P and natural P. In this section, we explain how we determined the anthropogenic component, i.e., X_{Ant} for a given flux X. According to the definition given in section 1, the natural component of each total flux (X_{Nat}) can be found by subtracting the anthropogenic component from the total flux X_{Tot}.

CF and mineral feed (MF) were considered to be totally anthropogenic. The anthropogenic component of exports (E_{Ant}) was calculated according to equation (4).

The following relationship was used to determine P in sludges of anthropogenic origin for a given year n:

$$\mathrm{SL_{Ant}}(n) = \mathrm{fdet} \cdot \mathrm{SL_{Tot}}(n) + \frac{\mathrm{E_{Ant}}(n-1)}{\mathrm{E_{Tot}}(n-1)} \cdot (1 - \mathrm{fdet}) \cdot \mathrm{SL_{Tot}}(n), \tag{7}$$

where fdet represents the fraction of sludge P from detergent. Detergent is present in wastewater and ultimately in sludges produced by treatment plants. In our simulations, we considered P in detergent to be entirely anthropogenic (i.e., having an anthropogenic signature of 1). Given the scarcity of data about fdet, we assigned it a value of 0.39 for the whole period [*Senthilkumar et al.*, 2012b]. The anthropogenic signature of exports was assigned to $(1 - \mathrm{fdet})\cdot\mathrm{SL_{Tot}}$, based on the assumption that the anthropogenic signature of human excrement is determined by the food signature. The effect of feed importation on the meat signature was neglected. The anthropogenic signature of the previous year was used to represent the fact that crops were mainly harvested at the end of year $n-1$ and consumed in year n.

For feed and fodder, we may write the following:

$$\mathrm{FF_{Ant}}(n) = \frac{\mathrm{E_{Ant}}(n-1)}{\mathrm{E_{Tot}}(n-1)} \cdot (\mathrm{SFF_{Tot}}(n) + (1-\delta) \cdot \mathrm{IFF_{Tot}}(n)) + s_1 \cdot \delta \cdot \mathrm{IFF_{Tot}}(n), \tag{8}$$

where δ is the fraction of imported feed and fodder ($\mathrm{IFF_{Tot}}$) with the s_1 anthropogenic signature. As a first approximation, δ was defined as the fraction of imported feed corresponding to soy. We assumed that all feed apart from soy was imported from countries with fertilizing patterns and geologic components that were similar to those of France; this then enabled us to use the same signature as that applied to $\mathrm{SFF_{Tot}}$ (i.e., $\mathrm{E_{Ant}}/\mathrm{E_{Tot}}$). We also assumed that most of the imported soy came from South America. Despite the low supply of natural P in tropical soils [*Aragão et al.*, 2009; *Vitousek et al.*, 2010], the use of chemical fertilizer in South America increased only fairly recently (e.g., from 1990 for Brazil [*FAOSTAT*, 2013]), and we considered that $s_1 = 0$. The chosen s_1 value and its temporal variation had a negligible effect on the final results (not shown).

As regards P in organic fertilizer ($\mathrm{OF_{Tot}}$), we assumed that there was no historical year-to-year variation of livestock pools. By applying this assumption to each livestock pool (anthropogenic, natural, and total), then by rearranging the resulting equations, we obtained the following:

$$\mathrm{OF_{Ant}} = \frac{\mathrm{FF_{Ant}} + \mathrm{MF}}{\mathrm{FF_{Tot}} + \mathrm{MF}} \cdot \mathrm{OF_{Tot}}. \tag{9}$$

Details about the strategy to get equation (9) are given in the supporting information (Text S4).

2.6. Initial Conditions

Model simulations were performed for the 1948–2009 period. The size of the soil P pools ($\mathrm{LP_{Ant}}$, $\mathrm{SP_{Ant}}$, $\mathrm{LP_{Nat}}$, and $\mathrm{SP_{Nat}}$) at the beginning of the simulation was required. We chose to assume that there were negligible anthropogenic pools before 1948 (i.e., $\mathrm{LP_{Ant}}(n < 1948) = \mathrm{SP_{Ant}}(n < 1948) = 0$). Our strategy was then to select initial conditions for natural labile pools ($\mathrm{LP_{Nat}}$) that would enable the simulated E_{Tot} to match observed exports in 1948 (hereafter called $E_{Tot}^{obs}(n = 1948)$). $\mathrm{SP_{Nat}}$ was then computed by assuming equilibrium between labile and stable natural P pools in 1948 as in *Sattari et al.* [2012]. More details are given in the supporting information (Text S5 and Fig. S3).

2.7. Optimization

The parameters involved in the computation of $\mathrm{E_{Tot}}$ were (β,γ). Equilibrium between labile and stable pools was determined by a reaction rate constant, defined as the ratio of $\mu_{LP\to SP}$ to $\mu_{SP\to LP}$. Modifying just one of these μ parameters ($\mu_{LP\to SP}$ or $\mu_{SP\to LP}$) was enough to shift the equilibrium toward either the

©2014. American Geophysical Union. All Rights Reserved.

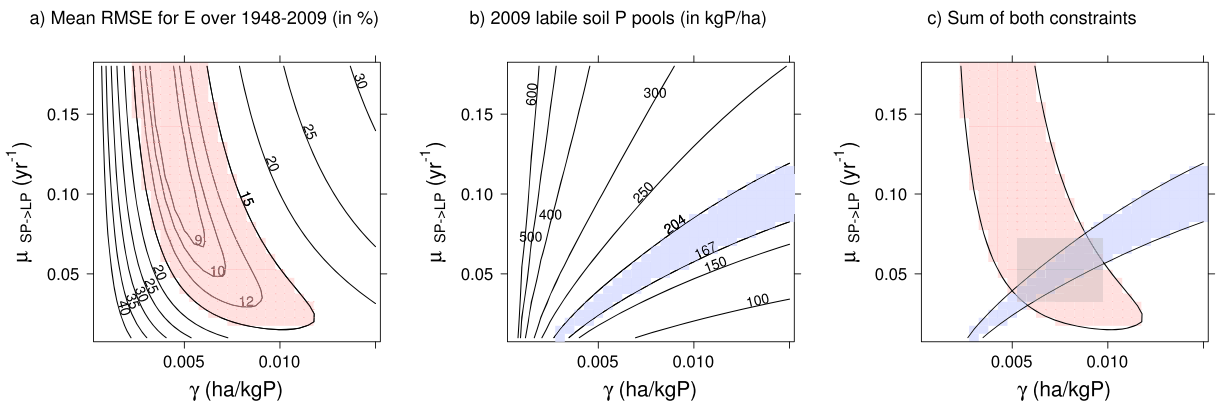

Figure 3. Optimization of parameters γ and $\mu_{SP\rightarrow LP}$ by comparing the simulations with different observations: (a) the export, (b) the current labile soil pool, and (c) the combination of both. In each panel, the *x* axis corresponds to γ (ha/kgP) while the *y* axis corresponds to $\mu_{SP\rightarrow LP}$ (yr^{-1}). In Figure 3a, $1/\mu_{SP\rightarrow LP}$ (yr) is also plotted on a secondary *y* axis. Each panel displays the model results for 1050 simulations performed with different (γ, $\mu_{SP\rightarrow LP}$) combinations and a constant β of 20 kgP/ha/yr (see Text S7 and Fig. S4 in the supporting information). The contours in Figure 3a give the mean RMSE between the simulated and "observed" export (*E*) over the 1948–2009 period (expressed in percent of mean observed *E*), while the contours in Figure 3b correspond to the simulated 2009 labile soil pool (LP_{Tot}, in kgP/ha). In Figure 3a and 3b, the shaded area (red or blue) indicates the range of (γ, $\mu_{SP\rightarrow LP}$) that enables the closest possible simulation of real-world observations. Finally, Figure 3c shows the range of parameters (gray area) obtained by combining constraints based on observations of both exports (*E*) and labile P in soil.

labile or the stable pool. Thus, we chose to assign $\mu_{LP\rightarrow SP}$ a constant value of 0.2 yr^{-1}, in accordance with *Sattari et al*. [2012], while allowing only $\mu_{SP\rightarrow LP}$ to vary. It was difficult to find estimates of such parameters that could be representative of the French situation. For example, the potential yield in the absence of P limitation (β) must have varied over the last 60 years because of such events as changes in crop contribution to total production, genetic improvement of each species, and advances in agricultural techniques [*Brisson et al*., 2010]. We defined potential ranges of variation for each parameter and then narrowed down these ranges by implementing an optimization procedure.

The potential ranges of variation of $\mu_{SP\rightarrow LP}$ and β were, respectively, defined as [0.01–0.18] (yr^{-1}) and [10–26] (kgP/yr/ha), in accordance with values provided by *Sattari et al*. [2012] and current exports according to *FAOSTAT* [2013]. However, it was more difficult to give an agronomic meaning to γ. To obtain an initial range of variability for γ, we made use of information provided in the literature about the contribution of applied (chemical and organic) fertilizer to total exports within a given year (see Text S6 in the supporting information). This led to an interval of [0.0005, 0.0150] (ha/kgP).

Available observations on the scale of France were used as constraints during the optimization procedure, namely, the observed E_{Tot} (i.e., inferred from the data set, E_{Tot}^{obs}) over the 1948–2009 period and the measured current bioavailable soil P. These data were combined to restrict the range of optimized parameter values. Two consecutive steps were taken: first to optimize β and then to optimize $\mu_{SP\rightarrow LP}$ and γ simultaneously. Details about the first step are given in the supporting information (Text S7 and Fig. S4).

The second step consisted in optimizing the (γ, $\mu_{SP\rightarrow LP}$) pair for each optimized value of β (see Figure 3 showing the case of $\beta = 20$ kgP/ha/yr). On the one hand, the (γ, $\mu_{SP\rightarrow LP}$) pairs leading to a root-mean-square error (RMSE) lower than an arbitrary threshold of 15% were selected (red area in Figure 3a). On the other hand, we also used current observations of soil content in bioavailable P to constrain the (γ, $\mu_{SP\rightarrow LP}$) parameter range (Figure 3b). Among the various possible methods for measuring bioavailable P, the Olsen method is the most frequently employed in France. Therefore, we were not inclined to use any other method-derived bioavailable P (e.g., P-Dyer) in the present study. The RMQS (Réseau de Mesures de la Qualité des Sols) soil monitoring network [*Arrouays et al*., 2002; *Jolivet et al*., 2006] carried out measurements on soil samples collected between 2000 and 2009 from 2200 sites distributed over a regular 16 km grid across France. This database provides soil P values that are representative of the national average. The P-Olsen value was measured over 594 agricultural sites (327 cropland and 267 grassland), and an average of 185 ± 6 kgP/ha was estimated for the top 35 cm soil layer (see Text S8 in the supporting information). (γ, $\mu_{SP\rightarrow LP}$) pairs leading to a simulated 2009 labile pool size (LP_{Tot}) of 185 kgP/ha ±10% were selected (blue area in Figure 3b).

©2014. American Geophysical Union. All Rights Reserved.

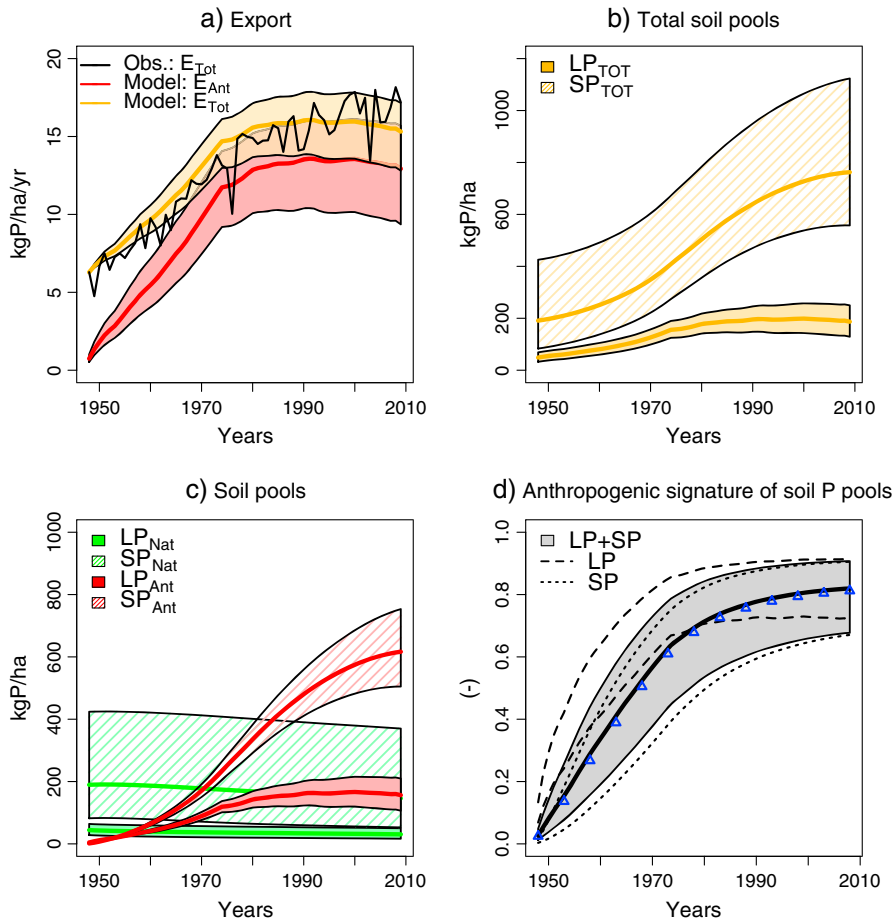

Figure 4. Simulation results for (a) exports, (b) total soil pools, (c) labile and stable soil pools, and (d) the anthropogenic signature of soil P pools. As mentioned in the text, Tot refers to the sum of natural (Nat) and anthropogenic (Ant) components. In each panel, the colored area shows the sensitivity to the chosen parameter pair (γ, $\mu_{SP\rightarrow LP}$). Each parameter has a range of variation that has been defined through an optimization procedure (see section 2.7). Colored areas indicate the min-max range, and the associated curves correspond to average simulations. In Figure 4d, only the mean curve for LP + SP is given (solid black curve). The blue triangles correspond to the results obtained with equation (10).

Finally, we combined the two constraints described above (gray area in Figure 3c). For $\beta = 20$kgP/ha/yr, our optimization procedure narrowed down the range of parameters to γ: [0.0055–0.0095] (ha/kgP) and $\mu_{SP\rightarrow LP}$: [0.035–0.070] (yr^{-1}).

3. Results

3.1. Exports

Thanks to our optimization procedure, the simulated total exports (E_{Tot}) followed the trend of the observed total exports (Figure 4a). However, we were unable to capture the observed year-to-year variability. For example, although extreme climate events such as the 1976 and 2003 droughts had a huge impact on the observed E_{Tot}, this impact could not be simulated because our parameterization only took into account P limitation. The anthropogenic signature of exports increased sharply between 1948 (~0.0) and 1975 (~0.80) then became relatively stable (slight increase to 0.84 in 2009). This temporal pattern is attributed to the variation of the anthropogenic signature of the labile soil pool (see equation (4)).

3.2. Soil Pools

The simulated labile (LP_{Tot}) and stable (SP_{Tot}) soil pool sizes reached 187 [min: 129; max: 250] and 762 [min: 558; max: 1123] kgP/ha, respectively, in 2009 (Figure 4b). The min-max range of optimized $\mu_{SP\rightarrow LP}$ for

©2014. American Geophysical Union. All Rights Reserved.

selected β values was [0.03–0.07], which means that it was necessary to take into account a stable P pool capable of replenishing the labile pool within 14 to 33 years (i.e., $1/\mu_{SP\rightarrow LP}$) in order to match country-scale observations. The large min-max range of the simulated stable pool is related to the uncertainty in the definition of SP_{Tot}, which is dependent on the value of $\mu_{SP\rightarrow LP}$. However, the optimization strongly reduced the propagation of parameter uncertainty on the simulated soil pools. For instance, with preoptimized ranges of (γ, $\mu_{SP\rightarrow LP}$), the simulated soil pool sizes were [min: 42; max: 1241] and [min: 204; max: 15892] for LP_{Tot} and SP_{Tot}, respectively. Overall, both LP_{Tot} and SP_{Tot} increased over the 1948–2009 period, with averages increasing by 283% and 299%, respectively. This increase in total pool size (LP_{Tot} or SP_{Tot}) was faster during the first half of the study than during the second half. In fact, LP_{Tot} decreased over the last 7 years, but this decrease was very small ([−10;−7] kgP/ha).

The simulated temporal evolution of the natural pools is very different from that of the anthropogenic pools, with the former being characterized by a small decrease and the latter by a large increase over the whole time period (Figure 4c). The anthropogenic component exceeded the natural component in labile and stable pools from 1959 and 1970 onward, respectively. The 2009 pool sizes were 146 [min: 53; max: 370] and 616 [505; 753] kgP/ha for stable pools of natural P and anthropogenic P, respectively, and 31 [17; 50] and 156 [106; 210] kgP/ha for labile pools of natural P and anthropogenic P, respectively. The 2009 contribution of labile to labile + stable P was the same for anthropogenic and natural components (~0.20). The slower rise in LP_{Ant} and SP_{Ant} after the mid-1970s and the drop in LP_{Ant} over the last 7 years explain the patterns observed for total soil pools (Figure 4b).

3.3. Anthropogenic Signature

Figure 4d presents the temporal evolution of the anthropogenic signature for stable and labile soil pools as well as that of their sum. The 2009 anthropogenic signature of the sum of labile and stable pools was 0.82 [min: 0.68; max: 0.91]. The historical evolution of the P anthropogenic signature was characterized by two distinct periods: a steep linear increase of approximately 0.024 yr^{-1} ($R^2 = 0.998$) until 1974, followed by a much gentler rise. Given the continuous slight decrease in natural pools over the study period, this historical evolution may be attributed to a buildup of anthropogenic pools (Figure 4c). The 1975 anthropogenic signatures of LP and SP were 74% and 92% of the corresponding 2009 anthropogenic signatures. The anthropogenic signature of LP increased before that of SP mainly for two reasons: (i) chemical fertilizer went into LP first and (ii) LP was smaller than SP and therefore more sensitive to the chemical fertilizer flux. Interestingly, labile and stable pools had almost the same anthropogenic signature in 2009, that is, 0.84 [0.72–0.91] and 0.82 [0.67–0.91], respectively. This can be explained by exchanges between soil P pools and the export-feed-manure loop that led to a convergence of signatures for the labile and stable pools (Figure 1). Another noteworthy aspect is that the average anthropogenic labile pool signature remained constant over the last 7 years despite a decrease in LP_{Ant}. Indeed, the relatively large size of anthropogenic soil pools compared to natural soil pools in the 2000s made the anthropogenic soil signature insensitive to slight variations of LP_{Ant} and SP_{Ant}.

3.4. Role Played by Past Chemical Fertilizer Use

The use of chemical fertilizer (CF) was a driving factor behind the anthropogenic soil P signature and its historical evolution. A sensitivity test carried out with modified anthropogenic signatures for the different P inputs showed that approximately 93% of the 2009 anthropogenic signature of soil pools was linked to chemical fertilizer while the remaining 7% originated from mineral feed (6%) and detergent contained in spread sludges (1%). The integral of CF over time was used to estimate the historical evolution of the soil pool anthropogenic signature. The validity of this estimation was demonstrated by the similitude between the mean anthropogenic signature computed by the model (solid black curve in Figure 4d) and that obtained from the following relationship (blue triangles in Figure 4d):

$$S(n) = \frac{\sum_{1948<y<n} \mathrm{CF}(y)}{\mathrm{LP_{Nat}}(1948) + \mathrm{SP_{Nat}}(1948) + \sum_{1948<y<n} \mathrm{CF}(y)}. \tag{10}$$

The difference between the two curves was even smaller than the above mentioned 7%. Indeed, soil inputs of anthropogenic P corresponding to detergent in sludges and mineral feed were offset by the importation of

©2014. American Geophysical Union. All Rights Reserved.

feed with a slightly lower anthropogenic signature (see section 2). A comparison between the model and equation (10) revealed that losses had no effect on the anthropogenic signature of ($LP_{Tot} + SP_{Tot}$). It also showed that despite a decrease in CF use since 1974 (Figure 2), the anthropogenic signature of soil P continued to increase from the mid-1970s, albeit at a slower rate.

4. Discussion

4.1. Reliance on Anthropogenic P

Our results suggest that in 2009, 82% [min: 68; max: 91] of soil P was of anthropogenic P origin. In the present study, the anthropogenic signature found for labile soil pools (0.84 [0.72–0.91]) also applies to harvested crops. As mentioned in section 1, until now, most attempts to quantify the dependence of food production on chemical fertilizer use have been based on two specific ratios computed for a given year: the ratio of applied chemical fertilizer to overall soil inputs (R1) and the ratio of chemical fertilizer to exports (R2). R1 and R2 for France in the 2000s were 51% and 60%, respectively, which are very different from the anthropogenic signatures found in the present study. Indeed, our model-based estimate of 84% is more realistic than such ratios as it takes into account residuals and the recycling of anthropogenic P. Our estimate could also be compared to the numbers found by *Stewart et al*. [2005], who reviewed long-term comparisons of yield between fertilized and unfertilized treatments. They concluded that crop production in the USA would decline at least around 50% over time without N, P, and K commercial fertilizer. More specifically on P, they estimated that only 30% of P contained in the U.S. crop harvest is from manure. In one UK site reviewed by *Stewart et al*. [2005], the yield reduction of winter wheat consecutive to P chemical fertilizer omission was estimated to 44%. While such experiment could be used to estimate the yield decrease in case of abrupt change in chemical fertilizer supply (with no substitution by manure), it provides only a limited estimate of the current anthropogenic signature of food. First, it implies a deep perturbation of the studied system by strongly reducing the P input to the soil. Also, it neglects the recycling of anthropogenic P in agricultural systems.

4.2. Anthropogenic Perturbation of P Cycle

Our work identifies the buildup of a large soil P pool as a consequence of past chemical fertilizer use in a Western European country. It corroborates the findings of *Sattari et al*. [2012], who concluded that it was necessary to take into consideration residual P in soil instead of merely computing P soil budgets at a single time step [*MacDonald et al*., 2011]. In addition, our methodology enables the estimation of (i) the size of soil P pools involved in plant nutrition and (ii) the contribution of anthropogenic P to these pools. Whereas previous studies [*Galloway et al*., 2008; *Elser and Bennett*, 2011; *Sutton et al*., 2011; *Cui et al*., 2013] have only described major changes in global biogeochemical cycles arising from intensive agricultural practices, we are able to provide actual estimates of these perturbations by quantifying the soil nutrient status of a typical Western country. Thus, our results confirmed the deep perturbation of the global P cycle, not only in terms of P intensity which is cycled within agricultural systems but also in terms of natural versus anthropogenic origin. The building of a large anthropogenic soil P pool in countries with intensive agriculture makes them responsible for global P depletion and may have led to increased risks of water eutrophication.

4.3. Conservative Anthropogenic Signature of P Cycle

We have demonstrated that the current soil signature and its historical evolution are driven by initial soil P pools and the integral of chemical fertilizer over time (equation (10)). Because of the export-feed-manure loop, the anthropogenic signature of organic fertilizer is relatively close to that of exports. According to our results, intermediate fluxes only play a minor role, either because they are negligible (e.g., sludges, imported feed, and fodder) or because they are not distinguishable according to P origin. The same reasoning applies to losses to water, which were found to be relatively low (0.59 kgP/ha/yr during 1999–2009). When combined with the assumption whereby erosion is proportional to each soil pool (Sect. 2.4), the anthropogenic signature of soil P pools can be considered to be very conservative.

This property makes the anthropogenic signature of soil pools remain high despite the decrease in chemical fertilizer use after 1974 (Figure 2). Such decrease was due to fluctuations in World Market of food and chemical fertilizer as well as progress in environmental regulation and fertilization decision making. To assess the effect of potential future changes in anthropogenic P supply, we performed a sensitivity test over the

©2014. American Geophysical Union. All Rights Reserved.

next 50 years in which CF and mineral feed were halted and harvests were forced to be equal at the 2009 level. This sensitivity test predicted that, despite an averaged decrease in total soil pool size of 35% over the 2009–2059 period, the anthropogenic signature of soil P pools would only decrease slightly (by 0.003% yr^{-1} to 0.80 in 2059). This slight dip is wholly explained by the lower anthropogenic signature chosen for feed imports (s_1). The conservative nature of the P cycle accounts for the large anthropogenic perturbation that was found and underlines why past chemical fertilizer use must be taken into account in the estimation of anthropogenic soil signatures.

4.4. Stable Pool Contributing to Plant Nutrition

The reader may recall that in our model, soil P is classified as being either labile or stable. The stable pool encompasses a variety of P forms (e.g., P adsorbed on charged minerals such as Fe and Al oxides, organic P) capable of sustaining the bioavailable pool in different ways. Despite this simplicity, the model was able to match certain country-scale observations, thanks to a finely tuned optimization procedure. The model calibration showed that it was necessary to have a stable P pool capable of replenishing the labile pool within 14 to 33 years in order to mimic observations. In accordance with *Wolf et al*. [1987], we excluded all P that weathered too slowly to be included in the stable pool; unfortunately, this prevents us from making a comparison between the modeled sum of labile and stable pools and measurements of total soil P (Text S9 and Fig S5 in the supporting information). Despite this limitation and in line with the probabilistic description in *Dumas et al*. [2011], we believe that our optimization procedure constitute an interesting alternative to the extension of field-scale models to the global scale, a process that has its own drawbacks, particularly the need for site-specific parameterization.

4.5. Model Caveats

Despite being based on processes, our model remains fairly simple and, like any other model, has its limitations. First, a model assumption is that the use of anthropogenic P before 1948 was negligible. Indeed, although it is considered that synthetic P fertilizers have started being used since circa the beginning of the 20th century [*Grigg* 1987; *Bouwman et al*., 2011], the lack of data about exports, livestock, etc. in the years prior to the Second World War prevented us from extending the study period (Figure 2). However, a simple test was conducted to assess the sensitivity of the results to this assumption: by considering an extreme case, in which the model was run for 30 years under 1948 conditions (i.e., with 1948 levels of CF, manure, etc.) before the transient 1948–2009 run, we found that approximately 95 [87; 98]% of soil P was of anthropogenic P origin in 2009. This indicates that our model may underestimate the anthropogenic signature of soil P, but it does not disprove our conclusion about the large contribution of CF to current soil P fertility. What is even more interesting is that the case in which natural P (e.g., in guano form) was applied to agricultural soils before 1948 was implicitly taken into account in our approach because of the initial conditions that were selected.

We have also considered some of the difficulties associated with the representation of a bioavailable soil P pool. It should be noted that bioavailable P is more of a concept than a physical variable [*Harmsen et al*., 2005]. Chemical values obtained by P-Olsen or P-Bray extraction can provide an accurate relative index of the amount of P that a given crop may utilize from a soil, but rarely, if ever, can they provide an absolute measure of it [*Batjes*, 2011]. However, for the purposes of measurement and comparison, we chose to make LP represent the P-Olsen value. This is particularly appropriated to France where the Olsen method is the most frequently employed. Although specific functions are available for comparing the results obtained from these different methods [*Follain et al*., 2008; *Otabbong et al*., 2009], they have the disadvantage of depending on soil properties [*Lemercier et al*., 2008] and are not relevant at the country spatial scale.

Finally, the represented system is an average French soil. This has its limitations in that France is characterized by large spatial heterogeneity in its agricultural systems [*Senthilkumar et al*., 2012a] and soil types [*Follain et al*., 2008]. Therefore, only measurements that are representative of the whole country (e.g., RMQS) could be used in our optimization. We could overcome these limitations by developing a more mechanistic and spatially explicit approach, but this would require certain adjustments such as the downscaling of various national databases. Besides, croplands and grasslands have been aggregated in our approach. An interesting alternative would be to split these two systems. That would require additional assumptions to make a cropland/grassland distinction in material fluxes derived from national and international databases. E.g.,

©2014. American Geophysical Union. All Rights Reserved.

livestock information provided by *EUROSTAT* [2013] should be divided into animals living in animal housing (whose the manure is spread on cropland) and others. Such approach was used in *Bouwman et al*. [2011]. Note, however, that in France, ~30% of the grasslands are not permanent [*AGRESTE*, 2010] and are rotated with croplands, making the cropland/grassland distinction not straightforward.

Other minor model caveats are discussed in the supporting information (Text S9).

4.6. Application of Our Approach to Other Countries

Our approach at country scale has been applied to France. The found results could likely be extended to most of the European countries with intensive agriculture, in particular due to the historical evolution of chemical fertilizer (peak in mid-1970s) which was common to many Western European countries [*FAOSTAT*, 2013].

Our approach could also be used to investigate contrasting situations that result from differences in both P management [*MacDonald et al*., 2011] and natural soil P pools [*Vitousek et al*., 2010]. Our proposed modeling framework and optimization procedure are generic and would allow the model to be applied in different contrasted contexts. In such case, optimized parameters could significantly differ to the ones found for France: e.g., a lower $\mu_{SP \rightarrow LP}$ (corresponding to a time scale for stable pool larger than 14–33 years) would be likely found for countries with important fractions of Oxisols and Utlisols that have a large P fixation capacity [*Yang and Post*, 2011]. However, the optimization procedure requires measurements of bioavailable P that is representative to the country. In our approach, we chose to make the labile pool represent a P-Olsen value. P-Olsen value representative to country could be found for China [*Zhang et al*., 2005] or Botswana [*Batjes*, 2010], as well as European countries [*Tóth et al*., 2014], but additional investigations are required for other countries. Our approach could also be extended to other measurements techniques (P-dyer, Hedley, etc.) if they provide a reliable estimate of the labile pool at country scale.

However, some assumptions we made to build the model could be limiting for the application to other countries. Thus, few model adjustments are required to fit specific country context. E.g., we assumed that the conversion of land to agricultural soils had only a minor effect on the soil P pools. This is allowed because of limited change in UAA in France from 1948 to 2009. For countries with large increase of UAA, it would be required to take into account the incorporation of soil through the studied time-period that may lead to a reduction of the amount of anthropogenic P per hectare. The same soil P content as the ones used as initial conditions (i.e., in 1948) could be prescribed to incorporated soil. Also, our computation of losses is based on a large amount of measurements (total P measured at the outlets of the major river basins and the P discharged by isolated sources) that could be missing for other countries. A computation of losses based on a combination between erosion estimates for agricultural soils [*Van Oost et al*., 2007] and our simulated soil P concentration could be an alternative to the current method.

The application in parallel of our model to different countries that exchanges between them could allow *in fine* a better estimate of anthropogenic signature of imported feed and fodder while their role is found to be negligible for France.

5. Conclusion

Our results suggest that in 2009, 82% [min: 68; max: 91] of soil P was of anthropogenic P origin. The same anthropogenic signature applies to harvested crops and underlines the agriculture reliance on anthropogenic P. We have demonstrated that the current soil signature and its historical evolution are driven by initial soil P pools and the integral of chemical fertilizer over time. We found that the P cycle is highly conservative. This property made the anthropogenic signature nonsensitive to decreases in chemical fertilizer use in the past (e.g., after 1974) nor to potential decreases in the future, such as those which may arise from global resource depletion or geopolitical reasons.

Our work identifies the buildup of a large soil P pool as a consequence of past chemical fertilizer use in a Western European country. This not only increased the agriculture resistance to changes in P supply but also made it responsible for global P depletion. This resistance needs to be more accurately quantified as it varies from country to country, according to the specific historical fertilizing patterns. The extension of our approach to other countries would allow to investigate where and when fertility has accumulated, where it should be increased, and, with this in mind, how agricultural practices should be oriented on a global scale.

©2014. American Geophysical Union. All Rights Reserved.

Acknowledgments
We are grateful to Celine Ratié, Claudy Jolivet, and Marion Bardy (INRA, US 1106 Infosol) for making the French Soil Quality Monitoring Network (RMQS, Réseau de Mesures de la Qualité des Sols) data available. This work was funded by INRA (Environment and Agronomy Division) and Bordeaux Sciences Agro. The RMQS is supported by the French Group of Scientific Interest in Soil (GIS Sol) that involves the French Ministries in charge of Ecology (MEDDE) and Agriculture (MAAF), the French Environment and Energy Management Agency (ADEME), the Institute of Research for Development (IRD), the National Institute of the Geographical and Forest Information (IGN), and the National Institute for Agronomic Research (INRA). We would like to express our thanks to Philippe Eveillard (UNIFA) and the French water agencies for providing various data sets. Thanks are also due to Chantal Gascuel and Noémie Schaller for meaningful and helpful discussions. We are grateful to Laurent Augusto, Tamara Ben Ari, Elena Bennett, David Makowski, Charlie Koven, Alain Mollier, and Christophe Nguyen for their invaluable comments on earlier versions of the draft. We also thank two anonymous reviewers and one Associate Editor of GBC for providing constructive comments on our manuscript. Finally, we would like to thank Sze Mei Ringeval for her assistance with the linguistic aspects of this paper.

References

AGRESTE, Ministère de l'Agriculture, de l'Agroalimentaire et de la Forêt (2010), (La statistique, l'évaluation et la prospective agricole). [Available from http://agreste.agriculture.gouv.fr/page-d-accueil/article/donnees-en-ligne.]

Annuaire rétrospectif de la France 1948-1988, INSEE (1990).

Aragão, L., Y. Malhi, D. B. Metcalfe, J. E. Silva-Espejo, E. Jiménez, D. Navarrete, S. Almeida, A. C. L. Costa, N. Salinas, and O. L. Phillips (2009), Above-and below-ground net primary productivity across ten Amazonian forests on contrasting soils, *Biogeosciences*, *6*(12), 2759–2778.

Arrouays, D., C. Jolivet, L. Boulonne, G. Bodineau, N. Saby, and E. Grolleau (2002), A new initiative in France: A multi-institutional soil quality monitoring network, *C. R. Acad. Agric. Fr.*, *88*, 93–105.

Batjes, N. H. (2010), Inventory of P-Olsen data in the ISRIC-WISE soil database for use with QUEFTS (ver. 1.0), Report 2010/06, 24 pp., ISRIC, World Soil Information, Wageningen (with data file). [Available at http://www.isric.org/isric/Webdocs/Docs/ISRIC_Report_2010_06.pdf.]

Batjes, N. H. (2011), Overview of soil phosphorus data from a large international soil database, Report 2011/01, 56 pp., Plant Research International (PRI), Wageningen UR, and ISRIC –World Soil Information, Wageningen, with dataset. [Available at http://www.isric.org/isric/Webdocs/Docs/ISRIC_Report_2011_01.pdf.]

Blake, L., A. E. Johnston, P. R. Poulton, and K. W. T. Goulding (2003), Changes in soil phosphorus fractions following positive and negative phosphorus balances for long periods, *Plant Soil*, *254*(2), 245–261.

Brisson, N., P. Gate, D. Gouache, G. Charmet, F.-X. Oury, and F. Huard (2010), Why are wheat yields stagnating in Europe? A comprehensive data analysis for France, *Field Crops Res.*, *119*(1), 201–212, doi:10.1016/j.fcr.2010.07.012.

Bouwman, L., K. K. Goldewijk, K. W. Van Der Hoek, A. H. W. Beusen, D. P. Van Vuuren, J. Willems, M. C. Rufino, and E. Stehfest (2011), Exploring global changes in nitrogen and phosphorus cycles in agriculture induced by livestock production over the 1900–2050 period, *Proc. Natl. Acad. Sci.*, *110*(52), 20,882–20,887, doi:10.1073/pnas.1012878108.

Cerdan, O., et al. (2010), Rates and spatial variations of soil erosion in Europe: A study based on erosion plot data, *Geomorphology*, *122*(1–2), 167–177, doi:10.1016/j.geomorph.2010.06.011.

Cooke, S. E., and E. E. Prepas (1998), Stream phosphorus and nitrogen export from agricultural and forested watersheds on the Boreal Plain, *Can. J. Fish. Aquat. Sci.*, *55*(10), 2292–2299.

Cordell, D. (2010), *The Story of Phosphorus: Sustainability Implications of Global Phosphorus Scarcity for Food Security*, Department of Water and Environmental Studies, Linköping Univ., Linköping, Sweden.

Cui, S., Y. Shi, P. M. Groffman, W. H. Schlesinger, and Y.-G. Zhu (2013), Centennial-scale analysis of the creation and fate of reactive nitrogen in China (1910-2010), *Proc. Natl. Acad. Sci. U.S.A.*, *110*(6), 2052–2057, doi:10.1073/pnas.1221638110.

Dumas, M., E. Frossard, and R. W. Scholz (2011), Modeling biogeochemical processes of phosphorus for global food supply, *Chemosphere*, *84*(6), 798–805, doi:10.1016/j.chemosphere.2011.02.039.

Elrashidi, M. A., C. A. Seybold, D. A. Wysocki, S. D. Peaslee, R. Ferguson, and L. T. West (2008), Phosphorus in runoff from two watersheds in Lost River Basin, West Virginia, *Soil Sci.*, *173*(11), 792–806.

Elser, J., and E. Bennett (2011), A broken biogeochemical cycle, *Nature*, *478*, 29–31.

EUROSTAT (2013), European Commission Statistical database. [Available from http://epp.eurostat.ec.europa.eu/portal/page/portal/statistics/search_database.]

FAOSTAT, Food and Agriculture Organization of the United Nations (2013), Statistical database. [Available from http://faostat3.fao.org/faostat-gateway/go/to/home/E.]

Follain, S., C. Schvartz, P. Denoroy, C. Villette, N. P. A. Saby, D. Arrouays, B. Lemercier, and C. Walter (2008), A method for assessing available phosphorus content in arable topsoils over large spatial scales, *Agron. Sustainable Dev.*, *29*(2), 371–379, doi:10.1051/agro:2008046.

Galloway, J. N., A. R. Townsend, J. W. Erisman, M. Bekunda, Z. Cai, J. R. Freney, L. A. Martinelli, S. P. Seitzinger, and M. A. Sutton (2008), Transformation of the nitrogen cycle: Recent trends, questions, and potential solutions, *Science*, *320*(5878), 889–892, doi:10.1126/science.1136674.

Grigg, D. (1987), The industrial revolution and land transformation, in *Land Transformation in Agriculture*, edited by M. G. Wolman and F. G. A. Fournier, pp. 70–109, John Wiley, New York.

Harmsen, J., W. Rulkens, and H. Eijsackers (2005), Bioavailability: Concept for understanding or tool for predicting, *Land Contam. Reclam.*, *13*(2), 161–171.

International Fertilizer Industry Association (2011), Global phosphate rock production trends from 1961 to 2010: Reasons for the temporary set-back in 1988–1994, Paris, France. [Available from http://www.statistiques.developpement-durable.gouv.fr/environnement/s/ressources-dechets-eau-assainissement.html.]

Jetten, V., G. Govers, and R. Hessel (2003), Erosion models: Quality of spatial predictions, *Hydrol. Processes*, *17*(5), 887–900, doi:10.1002/hyp.1168.

Jolivet, C., L. Boulonne, and C. Ratié (2006), *Manuel du Réseau de Mesures de la Qualité des Sols*, Unité InfoSol INRA Orléans, France.

Lemercier, B., L. Gaudin, C. Walter, P. Aurousseau, D. Arrouays, C. Schvartz, N. P. A. Saby, S. Follain, and J. Abrassart (2008), Soil phosphorus monitoring at the regional level by means of a soil test database, *Soil Use Manage.*, *24*(2), 131–138, doi:10.1111/j.1475-2743.2008.00146.x.

MacDonald, G. K., E. M. Bennett, P. A. Potter, and N. Ramankutty (2011), Agronomic phosphorus imbalances across the world's croplands, *Proc. Natl. Acad. Sci. U.S.A.*, *108*(7), 3086–3091, doi:10.1073/pnas.1010808108.

Otabbong, E., K. Börling, T. Kätterer, and L. Mattsson (2009), Compatibility of the ammonium lactate (AL) and sodium bicarbonate (Olsen) methods for determining available phosphorus in Swedish soils, *Acta Agric. Scand. Sect. B - Plant Soil Sci.*, *59*(4), 373–378, doi:10.1080/09064710902777091.

R Core Team (2012), *R: A Language and Environment for Statistical Computing*, R Found. Stat. Comput., Vienna, Austria.

Réseau de Mesures de la Qualité des Sols (2009). [Available from http://www.gissol.fr/programme/rmqs/rmqs.php.]

Sattari, S. Z., A. F. Bouwman, K. E. Giller, and M. K. van Ittersum (2012), Residual soil phosphorus as the missing piece in the global phosphorus crisis puzzle, *Proc. Natl. Acad. Sci. U.S.A.*, *109*(16), 6348–6353, doi:10.1073/pnas.1113675109.

Scholz, R., and F. W. Wellmer (2013), Approaching a dynamic view on the availability of mineral resources: What we may learn from the case of phosphorus?, *Global Environ. Change*, *23*, 11–27.

Sebilo, M., B. Mayer, B. Nicolardot, G. Pinay, and A. Mariotti (2013), Long-term fate of nitrate fertilizer in agricultural soils, *Proc. Natl. Acad. Sci. U.S.A.*, *110*(45), 18,185–18,189, doi:10.1073/pnas.1305372110.

Senthilkumar, K., T. Nesme, A. Mollier, and S. Pellerin (2012a), Regional-scale phosphorus flows and budgets within France: The importance of agricultural production systems, *Nutr. Cycling Agroecosyst.*, *92*(2), 145–159, doi:10.1007/s10705-011-9478-5.

Senthilkumar, K., T. Nesme, A. Mollier, and S. Pellerin (2012b), Conceptual design and quantification of phosphorus flows and balances at the country scale: The case of France, *Global Biogeochem. Cycles*, *26*, GB2008, doi:10.1029/2011GB004102.

Smil, V. (1999), Nitrogen in crop production: An account of global flows, *Global Biogeochem. Cycles*, *13*(2), 647–662, doi:10.1029/1999GB900015.

Smil, V. (2002), Nitrogen and food production: Proteins for human diets, *Ambio*, *31*(2), 126–131.

©2014. American Geophysical Union. All Rights Reserved.

Stewart, W. M., D. W. Dibb, A. E. Johnston, and T. J. Smyth (2005), The contribution of commercial fertilizer nutrients to food production, *Agron. J.*, *97*(1), 1–6.

Sutton, M. A., O. Oenema, J. W. Erisman, A. Leip, H. van Grinsven, and W. Winiwarter (2011), Too much of a good thing, *Nature*, *472*(7342), 159–161, doi:10.1038/472159a.

Tilman, D. (2001), Forecasting agriculturally driven global environmental change, *Science*, *292*(5515), 281–284, doi:10.1126/science.1057544.

Tilman, D., K. G. Cassman, P. A. Matson, R. Naylor, and S. Polasky (2002), Agricultural sustainability and intensive production practices, *Nature*, *418*(6898), 671–677.

Tóth, G., R.-A. Guicharnaud, B. Tóth, and T. Hermann (2014), Phosphorus levels in croplands of the European Union with implications for P fertilizer use, *Eur. J. Agron.*, *55*, 42–52, doi:10.1016/j.eja.2013.12.008.

Van Oost, K., et al. (2007), The impact of agricultural soil erosion on the global carbon cycle, *Science*, *318*(5850), 626–629, doi:10.1126/science.1145724.

Vitousek, P. M., R. Naylor, T. Crews, M. B. David, L. E. Drinkwater, E. Holland, P. J. Johnes, J. Katzenberger, L. A. Martinelli, and P. A. Matson (2009), Nutrient imbalances in agricultural development, *Science*, *324*(5934), 1519–1520.

Vitousek, P. M., S. Porder, B. Z. Houlton, and O. A. Chadwick (2010), Terrestrial phosphorus limitation: Mechanisms, implications, and nitrogen-phosphorus interactions, *Ecol. Appl.*, *20*(1), 5–15.

Van Kauwenbergh, S. J. (2010), *World Phosphate Reserves and Resources*, IFDC, Muscle Shoals, Ala.

Van Vuuren, D. P., A. F. Bouwman, and A. H. W. Beusen (2010), Phosphorus demand for the 1970–2100 period: A scenario analysis of resource depletion, *Global Environ. Change*, *20*(3), 428–439, doi:10.1016/j.gloenvcha.2010.04.004.

Wolf, J., C. T. De Wit, B. H. Janssen, and D. J. Lathwell (1987), Modeling long-term crop response to fertilizer phosphorus. I. The model, *Agron. J.*, *79*(3), 445–451.

Yang, X., and W. M. Post (2011), Phosphorus transformations as a function of pedogenesis: A synthesis of soil phosphorus data using Hedley fractionation method, *Biogeosciences*, *8*(10), 2907–2916, doi:10.5194/bg-8-2907-2011.

Zhang, C., H. Tian, J. Liu, S. Wang, M. Liu, S. Pan, and X. Shi (2005), Pools and distributions of soil phosphorus in China: Pools and distribution of soil phosphorus, *Global Biogeochem. Cycles*, *19*, GB1020, doi:10.1029/2004GB002296.

©2014. American Geophysical Union. All Rights Reserved.