HAL
open science

Development of an Integrated Fibre Bragg Grating Contact Pressure and Temperature Sensor for Composite Smart Manufacturing

Laurent Maurin, Pierre Ferdinand, Laurent Robert, Jean-José Orteu

To cite this version:

Laurent Maurin, Pierre Ferdinand, Laurent Robert, Jean-José Orteu. Development of an Integrated Fibre Bragg Grating Contact Pressure and Temperature Sensor for Composite Smart Manufacturing. STRUCTURAL HEALTH MONITORING 2011: CONDITION-BASED MAINTENANCE AND INTELLIGENT STRUCTURES, VOL 2, Sep 2011, Stanford, United States. p.1449-1456. hal-01644883

HAL Id: hal-01644883

https://hal.science/hal-01644883v1

Submitted on 21 Jun 2022

HAL is a multi-disciplinary open access archive for the deposit and dissemination of scientific research documents, whether they are published or not. The documents may come from teaching and research institutions in France or abroad, or from public or private research centers.

L'archive ouverte pluridisciplinaire **HAL**, est destinée au dépôt et à la diffusion de documents scientifiques de niveau recherche, publiés ou non, émanant des établissements d'enseignement et de recherche français ou étrangers, des laboratoires publics ou privés.

Development of an Integrated Fibre Bragg Grating Contact Pressure and Temperature Sensor for Composite Smart Manufacturing

L. MAURIN, P. FERDINAND, L. ROBERT and J.-J. ORTEU

ABSTRACT

Polymer matrix composites are widely used as structural materials due to their low weight and high strength vs. metallic ones. However, some issues concern their durability, the possibility of damage detection and prediction, the characterization of residual stresses, and the identification of their global mechanical properties. A better knowledge would help to understand the material's structural integrity and the inevitable variability of properties induced by manufacturing processes. In this way, the monitoring of composite material manufacturing is a key feature for better process understanding and quality improvement. Today, measurements are often limited to global or indirect sensing, but very few are routinely performed locally or in the vicinity of the composite parts during the process. Therefore, controlling curing parameters in such areas where resin flows are complex appears relevant for process optimization [1-3].

In such a context, the research project ELICo-CP devoted to the development of a small and weakly intrusive optical Fibre Bragg Gratings (FBG)-based sensor for both contact pressure and temperature variation measurements has been initiated. Such a sensor will allow the measurement of contact pressures up to 10 bar with surrounding temperatures greater than 200°C in small curvature areas (down to 4 mm radius) inside manufacturing tools (autoclave and moulding processes based on a liquid resin injection). This sensor could be multiplexed and interrogated thanks to a high resolution and fast speed analyser similar to the BraggFIT® FBG measurement system already developed by the CEA LIST [4-5]. Experimental results of the sensor prototype, tested in a dedicated Resin Transfer Moulding (RTM) tool equipped with commercial reference sensors, demonstrate that the contact pressure variation information inside the mould can be measured with 0.1 bar resolution over the 10 bar range with such small sensors. However, for these first contact-pressure sensorprototypes, both hysteresis (10% full scale) and temperature cross-sensitivity shouldbe improved.

Laurent Maurin and Pierre Ferdinand, CEA, LIST, Optical Measurement Laboratory, F-91191
Gif-sur-Yvette, France.
Laurent Robert and Jean-José Orteu, Université de Toulouse ; Mines Albi ; Institut Clément Ader (ICA) ; Campus Jarlard, F-81013 Albi, France.

INTRODUCTION

Today, composite structural parts gain more and more importance in the primary structures of aircrafts (e.g.: sandwiches panel, monolithic stiffeners...) and their weight percentage rises from 5% on the Airbus A300, up to 10% on the A330/340, and greater than 15% on the A380. We anticipate that multi-technological and multi-materials parts, including sub-assemblies composites such as doors, fuselage..., will spread in the future. Similarly, an increasing number of primary structures is already planned to be made of composite materials. Among these, we should mention the A340-500 beam, and more recently the A380 centre wing box, which are two world first innovations in terms of composite-based structural parts highly loaded. As an indication, the number of composite parts manufactured per year for Airbus is huge: 4500 fins, flaps, and radomes, 400 central beams, 180 self-stiffened panels, etc., and these figures increased with both the A350 and the A400M military aircrafts. Taking into account the cost structure of a primary part roughly shared into: 30% (material), 65% (process), and 5% (NDT), it should be possible, from the perspective of a product validation based on a continuous recording of manufacturing parameters, to reduce the need for NDT (5% gain) as well as samples characterization (6% – 10% gain), leading to an overall gain close to 12% of the element cost.

An instrumentation based on optical fibre sensing able to record temperature and contact pressure is a privileged way to access local and crucial information [4-5], since process parameters (temperature, [contact] pressure, degree-of-cure) are related to quality of the final product. Consequently, the availability of sensors which could be placed as close as possible to the composite parts is a matter of concern for a continuous improvement process based, for instance, on Statistical Process Control (SPC) methods. We claim that additional costs due to the integration of such instrumentation would be damped by reductions in NDT time and corresponding costs, NDT which therefore may be partially replaced by process parameters control.

The aim of the ELICo-CP project is to develop and qualify a monitoring system based on Fibre Bragg Grating (FBG)-based sensors, embedded on subsurface of manufacturing tools: such system will precisely enable in situ measurements (temperature, contact pressure) during the curing cycle. Technical goals on short term consist in providing a real-time system to production units for composite manufacturing process monitoring, enabling to i) ensure the production homogeneity, ii) in situ control of any deviation from nominal process (e.g.: raw material batch changes evidence...), iii) check that the polymerisation was locally done in the allowable tolerance, iv) anticipate potential areas of non-compliance, and v) provide a tool for decision making in case of incident during the manufacturing cycle.

SENSOR DEVELOPMENT AND LAB MEASUREMENTS

The need for a non-intrusive sensor able to measure the contact pressure within cavities or areas with small curvature radii requires the use of a sensitive surface, smaller in diameter than the curvature radius itself, typically lower than 3 mm.

It is reminded that a contact pressure variation equal to $\delta P = 0.1$ bar applied on a steel made massive test body (Young's modulus $E \approx 210$ GPa) leads to very small

strain variations $\delta\varepsilon \approx 0.048\ \mu m/m$, usually in the noise measurement, whatever the measurement technique used (figure 1).

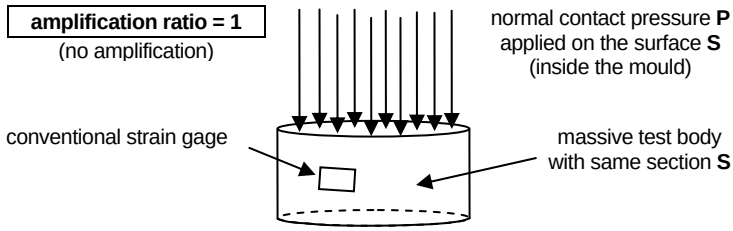

Figure 1. Massive test body equipped with conventional strain gage to measure contact pressure.

There are two main degrees-of-freedom to solve this sensitivity issue:

i. to use a lever arm to amplify the strains of the test body,
ii. to use a lower stiffness material for the test body,

keeping in mind the elevated temperature constraint of the composite manufacturing process: up to 200°C during several hours.

The solution adopted consists in a tubular test-body (Ø 0.8 mm OD) equipped with two FBG strain gages, and a greater sensitive surface S in contact with the pressure P, leading to a strain amplification ratio greater than 14, and a sensitivity $\delta\varepsilon/\delta P$ close to 7 ($\mu m/m$)/bar despite a contact surface diameter smaller than 3 mm, i.e. the maximum size within end-users' specifications (figure 2).

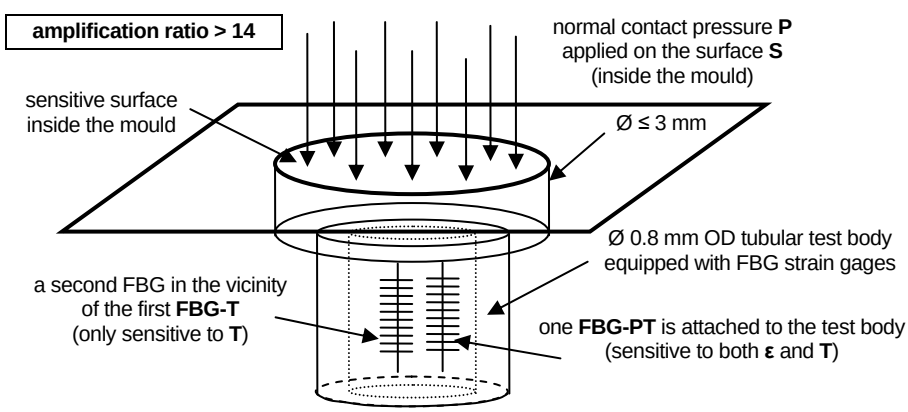

Figure 2. Strain amplification and temperature compensation principle used in ELICo-CP sensor.

Fibre Bragg Gratings (FBG) are, in such a case, very well suited in comparison with traditional strain gages: they can be easily inserted inside the tubular test body, and attached to it for strain measurements; moreover, additional FBGs can be inserted in close contact to the first FBGs for optimal temperature compensation[1]: temperature compensation is a key feature for accurate measurements (figure 3).

[1] FBG are sensitive to both strain and temperature.

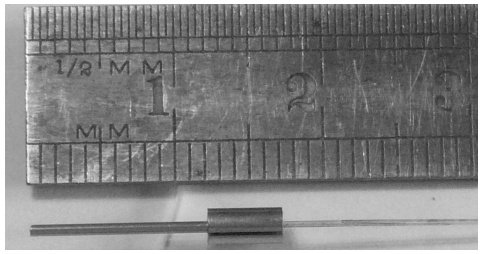

Figure 3. Cylindrical test body developed in ELICo-CP project, with both strain and temperature compensation FBGs located inside.

The mechanical assembly leads to a small sensor which can be easily inserted inside a mould for contact pressure measurements (figure 4); this sensor will provide two kinds of information:

i. the temperature variations, thanks to the temperature compensation FBG transducer,
ii. the contact pressure on the sensitive surface of the strain transducer, which could be:
   - the <u>hydrostatic pressure</u> if the material is liquid (this hydrostatic pressure can be measured with usual membrane sensors),
   - the <u>contact pressure</u> if there is a mix of solid and liquid, or only a solid: this contact pressure is different from the hydrostatic pressure, and cannot be measured with usual membrane sensors.

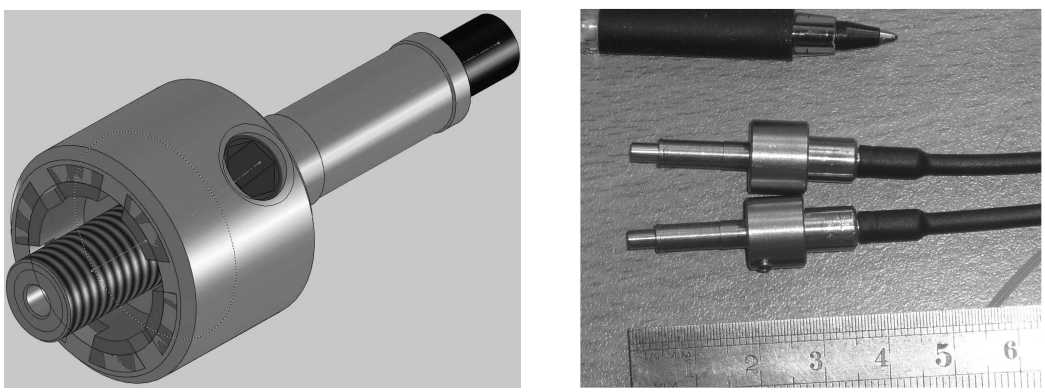

Figure 4. FBG contact pressure and temperature sensor.

This prototype has been first qualified in laboratory, using a very simple procedure consisting in putting calibrated weights on the sensitive surface, according to the equivalence relationship between the contact pressure P and the mass m:

$$P = \frac{4mg}{\pi\Phi^2} \qquad \text{with } \Phi \text{ : the sensitive surface diameter } (g = 9.81\ m/s^2)$$

The experimental data, at ambient temperature, exhibit a high sensitivity in pressure, compatible with targeted 0.1 bar contact pressure resolution, provided that a high resolution FBG measurement system is used (figure 5).

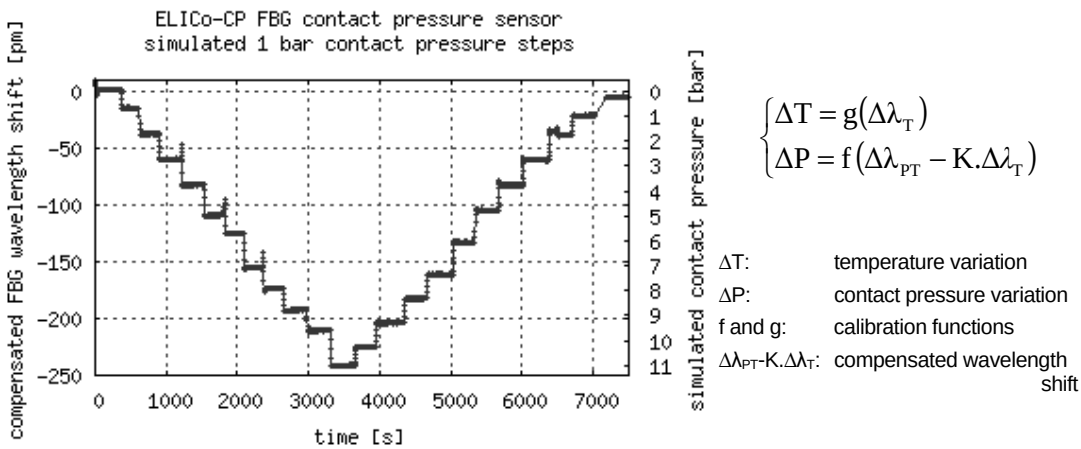

Figure 5. In lab tests with weights applied on the sensor's sensitive surface simulating an equivalent contact pressure.

The hysteresis has been evaluated close to 10% full scale and appears to be reproducible from cycle to cycle; one explanation amongst others may be friction between the sensitive part of the sensor, and the sensor's body itself (figure 6).

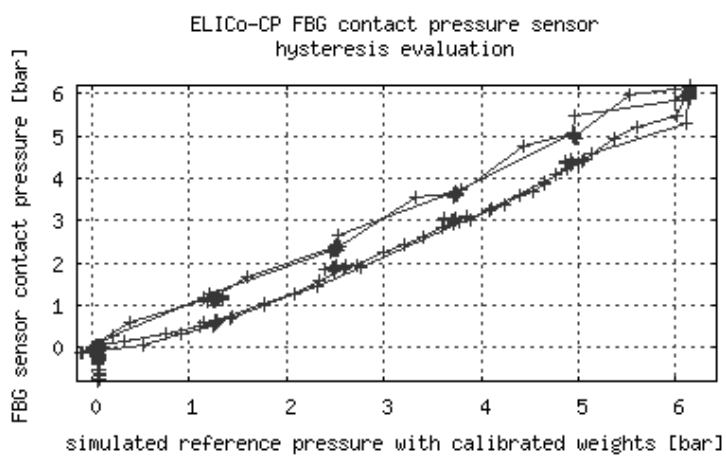

Figure 6. In lab tests: contact pressure hysteresis evaluation.

EVALUATION OF THE SENSOR INSERTED IN AN RTM MOULD

A special test-bed has been designed in order to evaluate performances of the sensor. This experimental set-up is based on a Resin Transfer Moulding (RTM) process. A dedicated RTM mould has been designed and instrumented with the developed sensor and some additional sensors: a conventional strain-gage-based pressure sensor (XPCM10 from FGPSensors®) and PT100 platinum probes, for comparison purpose. Figure 7 shows the experimental demonstrator. The mould, lying on a heating table, is connected to a resin injection unit, which allows to set temperature and pressure steps. This mould is intended to produce injection resin-

based composite parts, but for the first study reported in this paper, we have only injected air-pressure into the mould.

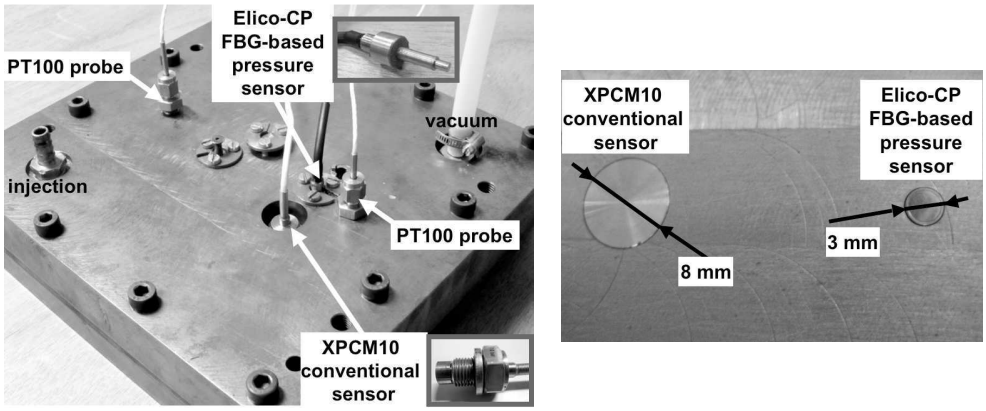

Figure 7. Experimental RTM test-bed designed to evaluate performances of the sensor. The left picture shows the outside instrumented mould, the right picture shows both pressure sensors flushing with the inside surface of the mould.

In situ temperature calibration

Figure 8 (a-b) present the wavelength shift of both FBG sensors vs. the measured temperature during a thermal cycle, showing that the response is somewhat non-linear and slightly different regarding the increase or decrease of temperature.

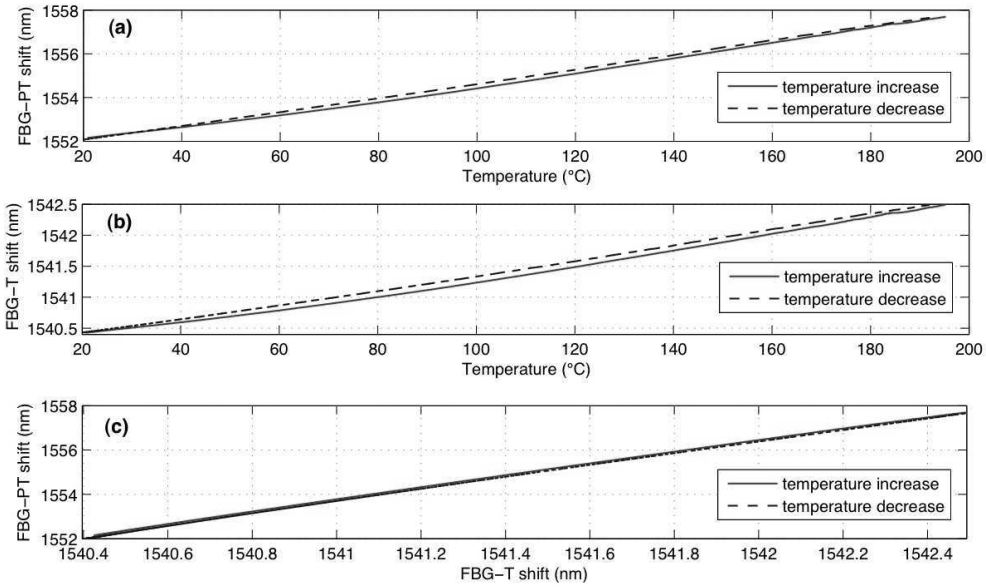

Figure 8. In situ temperature calibration.

Nevertheless, figure 8 (c) shows that both FBG sensors provide a temperature-compensated pressure measurement. A linear fit leads to a sensitivity ratio equal to

2.66 for the temperature increase and 2.75 for the decrease. If needed, a quadratic interpolation leading to a better fit could be used.

Pressure calibration

Pressure calibration was based on increases and decreases of pressure, step-by-step, as depicted in figure 9.

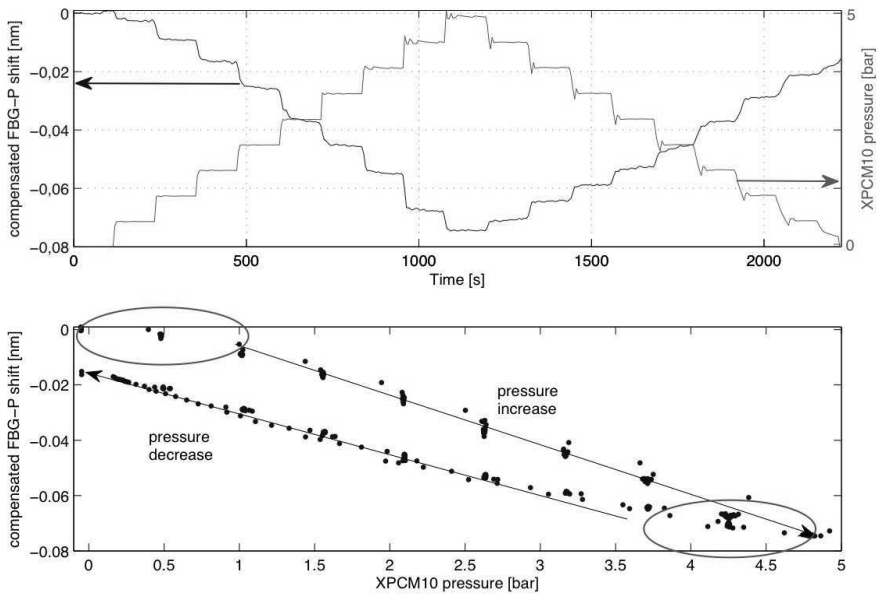

Figure 9. In situ pressure calibration.

Pressure range is around 5 bar and pressure steps are around 0.5 bar. From figure 9 it can be seen that pressure variations are badly detected at the beginning of pressure increase and pressure decrease (see ellipses). Without considering these data, quasi linear responses are obtained for both pressure increase and decrease, with sensitivities values estimated to -18 pm/bar and -16 pm/bar, respectively. This leads to an hysteresis previously discussed, also evaluated close to 10% full scale and almost reproducible in all our tests.

CONCLUSION

We have developed a contact pressure and temperature sensor prototype that can be embedded into composite process moulds. Even if the sensor should be improved, the first results are very encouraging, and a fully operational sensor should be available later. With such innovative instrumentation, gains are anticipated in the short term, as follows: i) reduction of both time and costs of post production controls, ii) enhancement of traceability throughout the production life of composite parts, and iii) a decision support in case of incidents during the manufacturing process. Moreover, on the longer term, gains will also concern both the optimization of performances and the enhancement of products quality. On the long term also, such

sensors will allow a smart monitoring of autoclaves, to optimize properties of structures, area by area, taking into account variations in shape and geometry of composite parts, as well as the variable thermal inertia behaviour of manufacturing tools. In particular, such new sensors should also participate to the local thermal control loop. For sure, such instrumentation will also be useful for the emergence and maturation of new non autoclave processes (e.g.: resin infusion).

ACKNOWLEDGMENT

The authors would like to thank the French National Research Agency (Agence Nationale de la Recherche, ANR) for its financial support within the framework of P2IC projects, and A. Hamasaiid, C. Vergnes, and J.-M. Mouys for their technical support.

REFERENCES

1. Y. Wang, B. Han, D.W. Kim, A. Bar-Cohen, P. Joseph, “Integrated Measurement Technique for Curing Process-Dependent Mechanical Properties of Polymeric Materials Using Fiber Bragg Grating”, Exp. Mech. 48:107–117, 2008.
2. V. Dewynter-Marty, S. Rougeault, P. Ferdinand, M. Bugaud, P. Brion, G. Marc et P. Plouvier, “Contrôle de la fabrication de pièces en matériaux composites réalisées par procédé RTM à l’aide de capteurs à réseaux de Bragg”, 20ièmes Journées Nationales d’Optique Guidée (JNOG 2000), 20-22 nov. 2000, Toulouse, France.
3. S. Triollet, L. Robert, E. Marin, Y. Ouerdane, “Liquid Resin Infusion process monitoring with embedded superimposed long period and short period Bragg grating sensor”, International Conference on Experimental Mechanics (ICEM’14), Poitiers, France, 2010.
4. L. Maurin, P. Ferdinand, G. Laffont, N. Roussel, J. Boussoir and S. Rougeault, “High speed real-time contact measurements between a smart train pantograph with embedded fibre Bragg grating sensors and its overhead contact line”, Structural Health Monitoring 2007, vol. 2, pp. 1808-1815, edited by Fu-Kuo Chang, DESTech pub. Inc., http://www.destechpub.com/, ISBN 978-1-932078-71-8, Stanford Univ., USA, Sept.11-13, 2007.
5. P. Ferdinand, G. Laffont, N. Roussel, J. Boussoir, L. Maurin, and S. Rougeault, “High performance Fiber Bragg Grating systems for Smart Structures: Application to Overhead Contact Line monitoring in the railway industry”, Structural Health Monitoring 2009, vol. 1, pp.641-648, edited by Fu-Kuo Chang, DEStech Pub. Inc. ISBN 978-1-60595-007-5, Stanford Univ., USA, Sept. 9-11, 2009.