HAL open science

Modeling and multi-objective optimization of an Electronic Throttle in open-loop

Mehdi Mcharek, Moncef Hammadi, Jean-Yves Choley, Toufik Azib, Cherif Larouci

To cite this version:

Mehdi Mcharek, Moncef Hammadi, Jean-Yves Choley, Toufik Azib, Cherif Larouci. Modeling and multi-objective optimization of an Electronic Throttle in open-loop. 17th International Conference on Research and Education in Mechatronics (REM), Jun 2016, Compiègne, France. pp.331-335, 10.1109/MECATRONICS.2016.7547164 . hal-01589526

HAL Id: hal-01589526

https://hal.science/hal-01589526v1

Submitted on 26 May 2023

HAL is a multi-disciplinary open access archive for the deposit and dissemination of scientific research documents, whether they are published or not. The documents may come from teaching and research institutions in France or abroad, or from public or private research centers.

L'archive ouverte pluridisciplinaire **HAL**, est destinée au dépôt et à la diffusion de documents scientifiques de niveau recherche, publiés ou non, émanant des établissements d'enseignement et de recherche français ou étrangers, des laboratoires publics ou privés.

Distributed under a Creative Commons Attribution 4.0 International License

Modeling and multi-objective optimization of an Electronic Throttle in open-loop

Mehdi Mcharek, Moncef Hammadi, Jean-Yves Choley
QUARTZ, EA 7393, SUPMECA
Saint-Ouen, France
mehdi.mcharek@supmeca.fr

Toufik Azib, Cherif Larouci
ESTACA`Lab
Saint Quentin, France
firstname.name@estaca.fr

***Abstract*—This paper deals with the preliminary design and optimization of a mechatronic system. We propose to take into account the technology of the system in preliminary design and also to make the optimization of the parametric model separately from the controller system. This approach is illustrated with a simulation model of an Electronic Throttle (ET) using Modelica. This component is challenging due to its nonlinearities and the required fast response time. An optimization of the system is proposed to meet the response time and torque requirements. The contributions of this work lie in the failsafe technology modeling and the optimization in open loop. The presented optimization results demonstrate the efficiency of the proposed methodology.**

Keywords—Electronic Throttle; Mechatronic modeling; Mutli-objective optimization; Modelica; ModelCenter;

I. INTRODUCTION

A mechatronic system commonly consists of an actuator, a transmission, a load and a control system with sensors. Generally, the system design and the controller design are developed and optimized simultaneously. However, a badly designed mechanical system will never be able to give a good performance by adding a good controller [1]. Therefore, it's recommended to make a preliminary optimization of the physical system at an early stage before adding the control system. This will allow the user to get a first idea about the performance of the system and the coherence of the model. To illustrate this methodology, the Electronic Throttle (ET) will be used to establish the optimal system configuration in open loop.

In recent years, research in the ET system and related areas has been very active. The research challenge lies mainly in nonlinearity characteristic of the system caused by the friction and the failsafe mechanism, the unknown parameters identification and the controller design.

Many authors have examined the area of modeling and identification and presented analytical models of the ET [2]. A graphical modeling approach of the ET with Modelica is presented in this paper.

In [3], a friction model is presented based on Coulomb model. A friction dynamic model has been considered in [4] making it more effective.

In another study [5], the author presented the dual spring system of failsafe as a set of linear functions. This representation does not take into account the failsafe technology.

The control strategy was also threated in numerous papers. An adaptive servo control strategy has been pointed out in [6] and a variable structure controller in [7]. These studies contain useful information about response time.

Another challenge is the multi-objective optimization of mechatronic systems. Two techniques are currently used, the first is by aggregating all the criteria in one multi-criteria indicator [8]. The second method is to keep the criteria independent and try to find a Pareto Front.

In this paper, the failsafe technology and the backlash effect of the gear stop are addressed by using Modelica language. The ET model is then connected to ModelCenter to perform a multi-objective optimization separately from the controller.

The paper is therefore organized as following; in section 2 we present globally the ET. In section 3, we consider the system modeling based on the cited methodology with a focus on using the technology early in the preliminary design. In section 4, we propose an optimization scenario in open loop and we discuss the results. The paper is concluded in section 5.

II. SYSTEM DESCRIPTION

Throttle actuator was a mechanical driven valve linked to the accelerator pedal by a cable. In modern models, this system is replaced by an Electronic Throttle (ET) directly related to the Electronic Controller Unit (ECU). The combustion engine torque is proportional to the air flow into the cylinders. Therefore, controlling the airflow with the ET implies controlling the torque and introducing improvements in vehicle emissions and drivability. [9]

In this paper, we study ET for spark ignition engines which are produced by Bosch and Valeo for example. The system consists of a DC motor, a gearbox, a failsafe system with two springs and a position sensor for ECU control as shown in Figure 1.

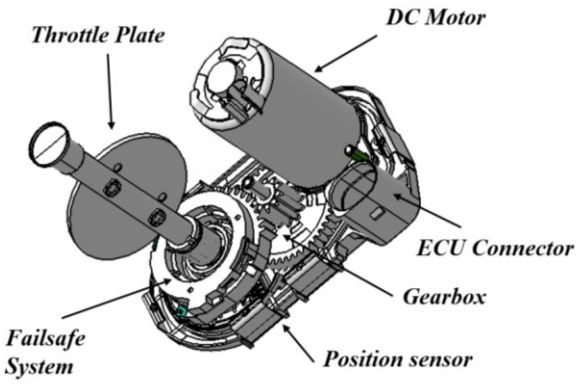

Fig. 1. Electronic Throttle architecture

III. ET SYSTEM MODELING AND TECHNOLOGIES

The system will be presented up to down as following: First the mathematical model with the global architecture of the system. Then, we present our graphical modeling approach with the failsafe system and the friction.

A. Mathematic model

In this section a model for numerical simulation is detailed. The system is illustrated in Figure 2 and all the parameters and the initial values are summarized in Table 1.

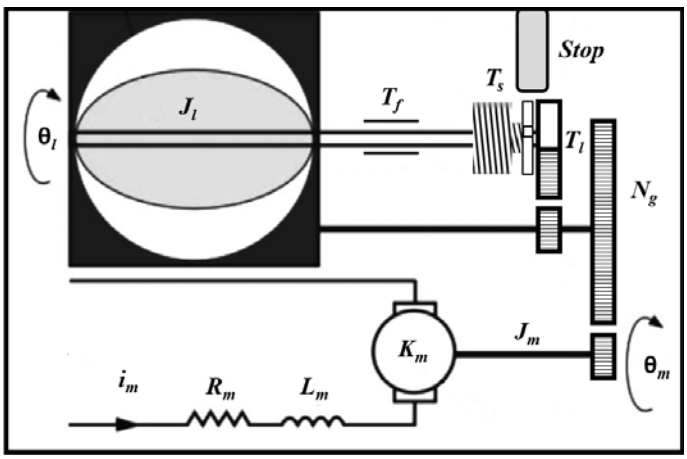

Fig. 2. Electronic Throttle components

TABLE I. SYSTEM PARAMETERS

Parameter	Unit	Description	Value
Motor			
K_m	N.m/A	Motor constant	0.02
K_e	N.m.s/rad	Back emf	0.02
R_m	Ohm	Resistance	1.5
L_m	H	Inductance	0.0015
J_m	Kg.m²	Inertia	4.8e-6
i_m	A	Current	variable
V_m	V	Voltage	variable
θ_m	deg	Motor angle	variable
Gear			
N_g	-	Ratio	20
Stop	deg	Angle interval	[0,90]
Load			
J_l	Kg.m²	Inertia	5.6e-5
T_s	N.m	Springs torque	variable
T_f	N.m	Friction torque	variable
T_l	N.m	Torque after reduction	variable
C_1	N.m/rad	Main spring stiffness	0.3
C_2	N.m/rad	Limp home spring stiffness	0.6
θ_l	deg	Throttle angle	variable

According to Kirchhoff's law, the DC motor circuit can be described as the following equation:

$$L_m.\frac{di_m(t)}{dt} + R_m.i_m(t) + K_e.\dot{\theta}_m(t) = V_m(t) \quad (1)$$

Using to the torque balance law, the kinematic equation of the DC motor is:

$$J_m.\ddot{\theta}_m(t) = K_m.i_m(t) - K_e.\dot{\theta}_m(t) \quad (2)$$

The gearbox reduction equations are:

$$T_l(t) = N_g\,.\,T_m(t) \quad (3)$$

$$\dot{\theta}_m(t) = N_g\,.\,\dot{\theta}_l(t) \quad (4)$$

And finely the torque balance law is applied in the load to obtain the global kinematic equation of the ET:

$$J_l.\ddot{\theta}_l(t) = T_l(t) - T_f(t) - T_s(t) \quad (5)$$

The springs torque (T_s) and the friction torque (T_f) are detailed in next paragraphs.

B. Modelica model

Several multi-domain modeling tools as Bond-Graphs, Matlab/Simulink and Modelica are used for preliminary design of a mechatronic system [10]. If we use a software based on transfer functions we will lose the link with the physical parameters. And one of our objectives is to consider the physical technology in the model. Therefore, Modelica language is used for this system to keep the relation with physical parameters and architecture.

1) Global model:

The global model of the ET is presented in the Figure 3 using components from Modelica library. We can see with this graphical approach that the main physical parameters are preserved like the inertia and the stiffness of springs. Also the architecture and so the physical technology are clear. For example, the Stop of the sector gear that limits the rotation of the valve between 0° and 90° is presented with a Backlash component connected to the gear. In this way, the designer can test many architectures in an early stage. He can also realize optimization and sorting best solutions.

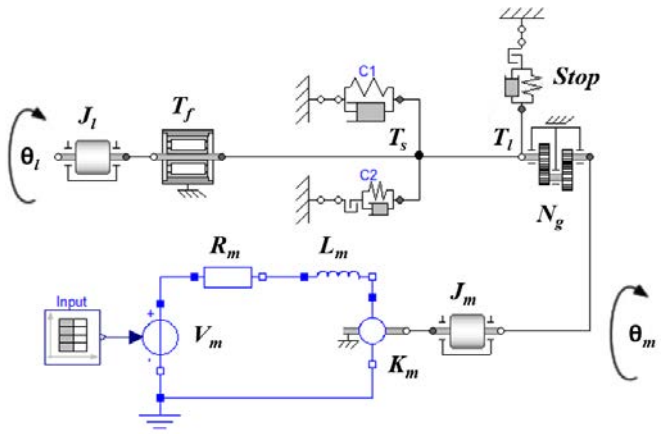

Fig. 3. Modelica model of the Electronic Throttle

2) Failsafe system:

The failsafe system acts when the control system of the ET fails. It brings the valve to a pre-defined angle (limp home position), in order to provide the necessary air flow to keep the engine running. Many technologies of failsafe system exist (one spring and two stops, two springs one stop...). We choose the solution presented in Figure 4.

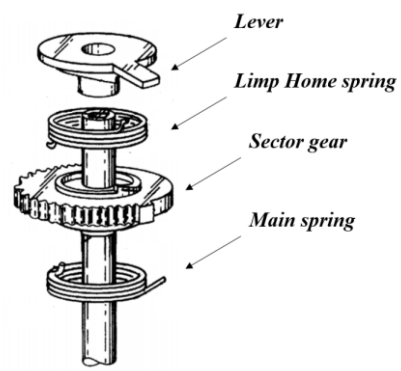

Fig. 4. Failsafe mechanism (source patent US6286481)

The limp home spring is connected to the lever and the sector gear, it acts only when the lever is in contact with the Stop. On the other hand, the main spring is connected to the sector gear and the mass. The role of the main spring (stiffness C1) is to bring the valve from open positon to limp home position. And the role of the second spring (stiffness C2) is to bring the valve from closed position to limp home position. In the two cases the equilibrium position is reached at the limp home position. The Figure 5 shows an example realized with a throttle initially positioned at 90° with 0V supply voltage. The two springs reach the equilibrium position at limp 10deg.

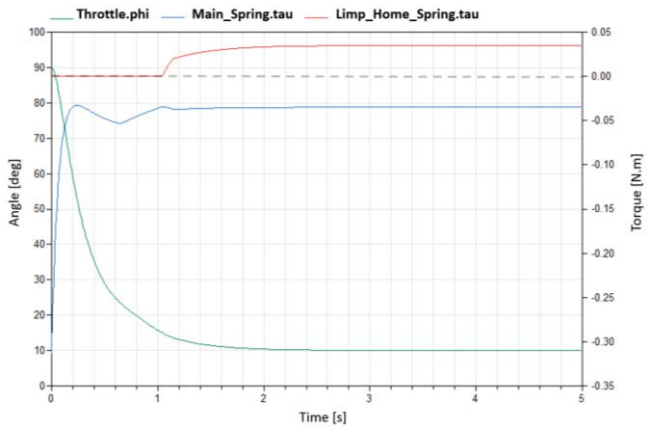

Fig. 5. Failsafe mechanism example

3) Friction model:

The ET like other large-series systems present considerable friction effects. Different models are used in previous works like Coulomb model, Striebeck model and Dynamic viscous model.

For lack of experimental data, a simple Coulomb model is used in this work. This friction emphasizes the nonlinearity of the system and this behavior is realized by the bearing friction component of Modelica library Figure 3.

IV. Model Optimization and Results

A. Problem description

We are searching for the system configuration that respects the following specifications:

- The rise time (0° to 90°) should be lower than 150 ms (12V supply voltage)
- The return time with the failsafe system (90° to 10°) should be lower than 300ms (0V supply voltage and open circuit)
- The maximum torque of the throttle should be between 2N.m and 3.5N.m

The response time specifications may appear very fast for the application but in reality the performances would be lower because of the aerodynamic torque of the airflow. The problem presented contains two contradictory objectives because if we want to decrease the return time we should use a spring with high stiffness and this will delay the rise time. Therefore a multi-objective optimization is applied by combining Modelica with ModelCenter software. The optimization problem formulation is presented in the next table.

TABLE II. OPTIMIZATION PROBLEM FORMULATION

	Unit	Lower bound	Start value	Upper bound
Objectives to minimize				
Rize_time	s	-	0.24	0.15
Return_time	s	-	3.38	0.30
Problem Constraints				
T_l_*max*	N.m	2	1.8	3.5
θ_*max*	deg	89	90	91
Design Variables				
K_m	N.m/A	0.01	0.02	0.08
R_m	Ohm	1	1.5	4
N_g	-	15	20	30
C_l	N.m/rad	0.1	0.3	1

Note that the maximum angle was added to the constraints to force the optimizer to respect the requirement full closed to full open. Furthermore, the return phase with motor is not considered here to simplify the optimization problem. This phase is tested and it is faster than the rise phase because the main spring and the motor work together.

B. Results

To carry out the optimization, Modelica was combined with ModelCenter software. And from the algorithms available in its library, we have chosen the NSGA II algorithm (Nondominating Sorting Genetic Algorithm) [11]. Since the problem is multi-objective, the solution is not unique but we obtain a set of Pareto solutions. The Pareto Front is presented in the Figure 7.

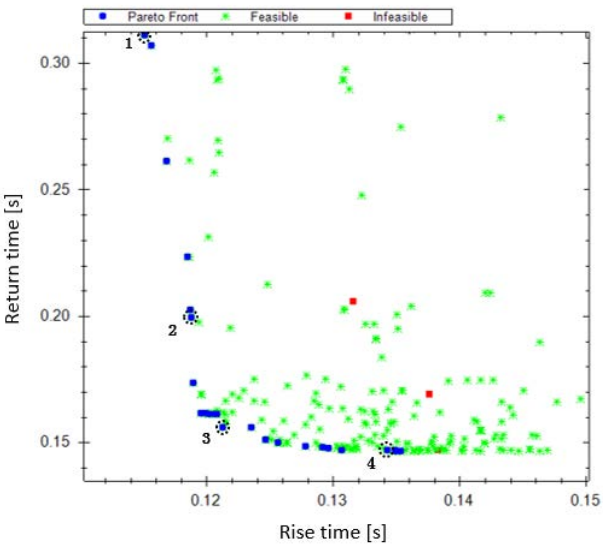

Fig. 6. Optimization result

Four points are selected with the associated design variables in the Table 3 to show that different technological solutions are possible.

TABLE III. DESIGNS SET

	Unit	1	2	3	4
Objectives values					
Rize_time	ms	115	119	121	134
Return_time	ms	302	198	155	147
Constraints values					
T_l_*max*	N.m	2.0	2.8	2.1	2.3
θ_*max*	deg	90	90	90	90
Design Variables					
K_m	N.m/A	0.027	0.019	0.026	0.023
R_m	Ohm	1.34	1.24	1.23	1.14
N_g	-	27.35	24.66.	20.75	23.54
C_l	N.m/rad	0.56	0.67	0.73	0.80

For validation the solution 2 is compared with the initial set as shown in Figure 8.

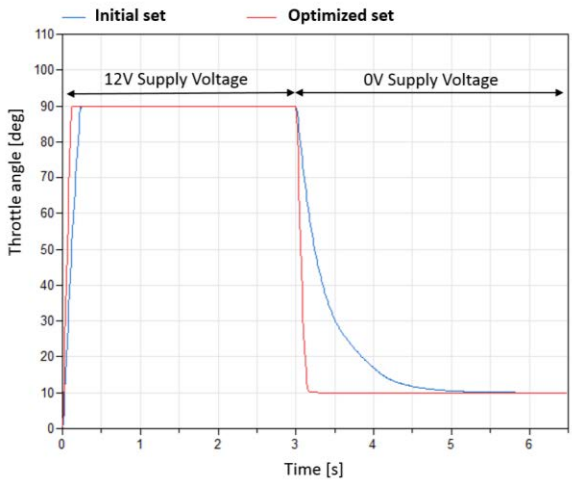

Fig. 7. Comparison between optimized set and initial set

C. Discussions

After 990 iterations, the solutions found present good performances and respect the torque constraint. The rise time can attend 118ms, the return time can attend 150ms and the designer should make the compromise between these two objectives. The torque value is in the range between 2N.m and 3.5N.m and this is sufficient to overcome the resistive torques.

In industrial context, to make the best decision the designer should consider other criteria. The used design variables are related to real components (gear, motor, springs) and for an ET producer the first thing to take into account with the performance is the cost. Therefore, many other constraints should be considered in the decision like components in stock or available components from suppliers.

V. CONCLUSION

This article has presented a novel approach of preliminary design and optimization of a mechatronic system. This approach was applied successfully to an Electronic Throttle.

We first integrated the technology of the system in the preliminary design thanks to Modelica language. Then, a multi-objective optimization was performed to obtain good configurations that respect the response time requirements and the torque constraint with a low time cost.

In our further work, we will try to make experimental tests and identifications to improve the model and make more validations.

ACKNOWLEDGMENT

The presented work has been supported by the research project AAP FUI 19 – MIMe. The author would like to thank the members of this project who contributed to this work by their suggestions and help.

REFERENCES

[1] J. Van Amerongen, "Mechatronic design.," *Mechatronics*, 2003, vol. 13, no 10, p. 1045-1066.

[2] R. N. Loh, W. Thanom, J. S. Pyko and A. Lee "Electronic throttle control system: modeling, identification and model-based control designs," *Engineering*, 2013, vol. 5, no 07, p. 587.J. Clerk Maxwell, A Treatise on Electricity and Magnetism, 3rd ed., vol. 2. Oxford: Clarendon, 1892, pp.68-73.

[3] S. Zhang, J. J. Yang and G. G. Zhu (2015). "LPV Modeling and Mixed Constrained Control of an Electronic Throttle," *Mechatronics, IEEE/ASME Transactions on*, *20*(5), 2120-2132.

[4] M. Vašak, L. Petrović and N. Perić. (2003, December) "State estimation of an electronic throttle body," *Industrial Technology, 2003 IEEE International Conference on* (Vol. 1, pp. 472-477). IEEE.

[5] C. H. Chen, H. L. Tsai and Y. S. Lin "Servo control design for electronic throttle valve with nonlinear spring effect," *Advanced Motion Control, 2010 11th IEEE International Workshop on* (pp. 88-93). IEEE, 2010.

[6] X. Jiao, J. Zhang and T. Shen "An adaptive servo control strategy for automotive electronic throttle and experimental validation,"*Industrial Electronics, IEEE Transactions on*, vol. 61, no 11, p. 6275-6284, 2014.

[7] Y. Pan, Ü. Özgüner and O. H. Dağci "Variable-structure control of electronic throttle valve. *Industrial Electronics,*" *IEEE Transactions on*, *55*(11), 3899-3907, 2008.

[8] M. Hammadi, J. Y. Choley, O. Penas, A. Riviere, J. Louati and M. Haddar "A new multi-criteria indicator for mechatronic system performance evaluation in preliminary design level," in Mechatronics, 9th France-Japan & 7th Europe-Asia Congress on and Research and Education in Mechatronics (REM), 2012 13th Int'l Workshop on(pp. 409-416). IEEE, 2012.

[9] R. Scattolini, C. Siviero, M. Mazzucco, S. Ricci, L. Poggio and C. Rossi "Modeling and identification of an electromechanical internal combustion engine throttle body," *Control Engineering Practice*, *5*(9), 1253-1259, 1997.

[10] M. Hammadi, J. Y. Choley, O. Penas and A. Riviere "Multidisciplinary approach for modelling and optimization of Road Electric Vehicles in conceptual design level," *Electrical Systems for Aircraft, Railway and Ship Propulsion (ESARS), 2012*. IEEE, p. 1-6, 2012.

[11] A. Guizani, M. Hammadi, J. Y. Choley, *T. Soriano, M. S. Abbes and M. Haddar* "Multidisciplinary optimization of mechatronic systems: Application to an electric vehicle," *Mechatronic Systems: Theory and Applications,* Springer International Publishing, p. 1-14, 2014.