HAL
open science

Conversion of Kinetic Energy into an Electromagnetic Pulse by means of Control of the Gravitational Mass

Fran de Aquino

To cite this version:

Fran de Aquino. Conversion of Kinetic Energy into an Electromagnetic Pulse by means of Control of the Gravitational Mass. 2017. hal-01578307

HAL Id: hal-01578307

https://hal.science/hal-01578307v1

Preprint submitted on 29 Aug 2017

HAL is a multi-disciplinary open access archive for the deposit and dissemination of scientific research documents, whether they are published or not. The documents may come from teaching and research institutions in France or abroad, or from public or private research centers.

L'archive ouverte pluridisciplinaire **HAL**, est destinée au dépôt et à la diffusion de documents scientifiques de niveau recherche, publiés ou non, émanant des établissements d'enseignement et de recherche français ou étrangers, des laboratoires publics ou privés.

Conversion of Kinetic Energy into an Electromagnetic Pulse by means of Control of the Gravitational Mass

Fran De Aquino
Professor Emeritus of Physics, Maranhao State University, UEMA.
Titular Researcher (R) of National Institute for Space Research, INPE
Copyright © 2017 by Fran De Aquino. All Rights Reserved.

It is shown a system that, if launched radially into the Earth's gravitational field, it can acquires a ultra high amount of kinetic energy, which can generate a highly intense pulse of electromagnetic energy (EMP) with magnitude of the order of 20 Megatons or more.

Key words: EMP, Kinetic Energy, Gravitational Mass.

In a previous paper we shown that the intensity of the local gravity can be controlled by means of a device called Quantum Controller of Gravity (QCG) [1]. Fundamentally, a QCG can have any spherical form (ellipsoidal, spherical, spherical cylindrical, etc.). Figure 1 shows a system with 1 (one) spherical QCG (shell with thickness Δx).

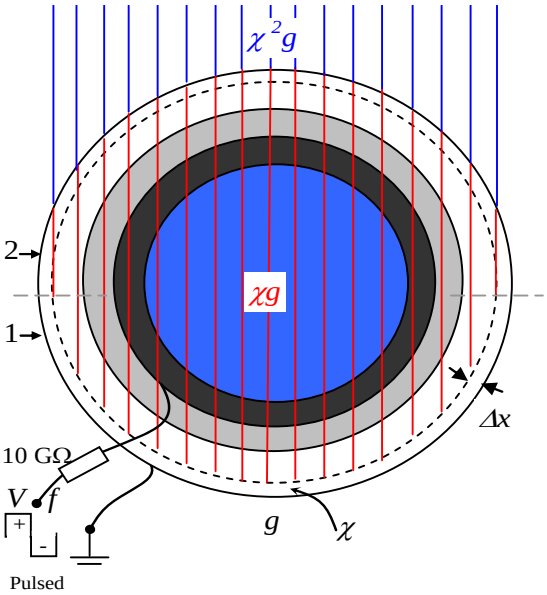

Fig.1 – The shell with thickness Δx works as a *Quantum Controller of Gravity*.

As show in the figure above, the gravity in the blue spherical region becomes χg , where χ is the expression of the correlation between gravitational mass and the rest inertial mass of the QCG, which is given by [1]

$$\chi = \frac{m_g}{m_{i0}} = \left\{1 - 2\left[\sqrt{1 + 2.64 \times 10^{-3} V} - 1\right]\right\} \quad (1)$$

where V is the voltage applied (See Fig.1).

It is possible to build a system with n concentric QCGs (See schematic diagram in Fig. 2.). In this case, the gravity inside the system becomes $\chi^n g$ [2]. Thus, if the rest inertial mass of the nucleus of the system (in blue) is $m_{i0(nucl)}$, and the system is launched from a height H into the Earth's gravitational field, then the weight of the system[1] becomes $P_{(sys)} = m_{g(sys)} g = \chi^n m_{i0(sys)} g \cong \chi^n m_{i0(nucl)} g$, and it will acquire an acceleration $a = \chi^n g$.

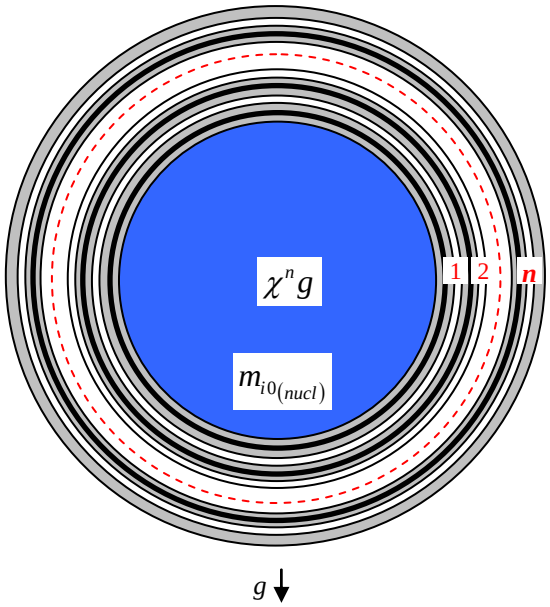

Fig. 2 – A system with *n* QCG

[1] Since the n spherical capacitors are too thin, then the total inertial mass of them is very less than the inertial mass of the *nucleus* of the system. Then, we can write that $m_{i0(sys)} \cong m_{i0(nucl)}$.

Then, the velocity v of the system, at the distance h (starting from the launch point (zero point). See Fig. 3), is $v=\sqrt{2ah}=\sqrt{2\chi^n gh}$, and the time interval to go from the zero point down to the end of the height h is given by $t=\sqrt{2h/\chi^n g}$. At this point, the kinetic energy of the system will be $E=\frac{1}{2}m_{g(sys)}v^2=\frac{1}{2}\chi^n m_{i0(nucl)}v^2$. Therefore, if at this moment the QCGs *are turned off*, then the gravitational mass of the system will sudden reduce to its inertial mass. Consequently, the system will release, in the form of a *high-power electromagnetic pulse*, an amount of energy ΔE

$$\Delta E=\tfrac{1}{2}\left(m_{g(sys)}-m_{i0(sys)}\right)v^2\cong\tfrac{1}{2}\chi^n m_{i0(nucl)}v^2=$$
$$=\tfrac{1}{2}\chi^{2n}m_{i0(nucl)}gh \qquad (2)$$

For example, if $n=6$; $\chi=-8.77$ (obtained from Eq. (1) for $V=12.7kV$); $m_{i0(nucl)}=10kg$; $g=9.8m.s^{-2}$ and $h=10km$, then the released energy is

$$\Delta E=\tfrac{1}{2}\chi^{2n}m_{i0(nucl)}gh=1.0\times10^{17}J\cong24\,Megatons \qquad (3)$$

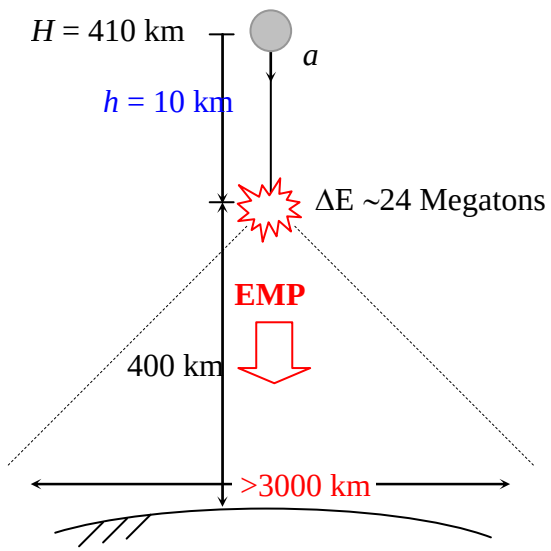

Fig. 3 – EMP of ~24 Megatons produced by the sudden conversion of kinetic energy into electromagnetic energy.

In this case the velocity of the system at the end of the 10km distance is

$$v=\sqrt{2\chi^n gh}\cong3\times10^5\,m.s^{-1} \qquad (4)$$

With this velocity the inertial mass of the system is given by

$$m_{i(sys)}=\frac{m_{i0(sys)}}{\sqrt{1-\frac{v^2}{c^2}}}\cong m_{i0(sys)} \qquad (5)$$

On the other hand, the traveling time of the system (from the zero point down to the end of the10 km distance) is

$$t=\sqrt{2h/\chi^n g}\cong67ms \qquad (6)$$

This time interval is insufficient for that the friction with the rarefied atmosphere heats significatively the system.

It is easy to see that the mentioned system can be launched into outer space (or in an *orbit of Earth*) *by itself* [2]. It is sufficient activates only *one* QCG of the system. In this case, the gravity on the nucleus of the system becomes χg . Then, for $\chi<0$ the direction of the gravity acting on the nucleus becomes *opposite the direction of the Earth's gravity* (g), and consequently the system leaves the Earth's surface and climbs. Thus, by controlling the value of χ it is possible control the ascending speed of the system.

In addition, by using *retrorockets* it is possible to put the system, for example in an *Earth's synchronous orbit* [3].

Note that, if the QCGs *are not turned off* along the distance of the 410km, then the system strikes on the Earth surface in 0.43s, with a velocity of $1.9\times10^6\,m.s^{-1}$ and energy of about 1 *Gigaton*.

[2] Without use of a rocket.

[3] *Synchronous Orbit* — An orbit in which a satellite has a velocity synchronized to the speed of the rotation of the earth and thus remains above a fixed point on the earth's surface.

References

[1] De Aquino, F. (2016) *Quantum Controller of Gravity*. Available at http://vixra.org/abs/1605.0244 and https://hal.archives-ouvertes.fr/hal-01320459

[2] De Aquino, F. (2010) *Mathematical Foundations of the Relativistic Theory of Quantum Gravity*, Pacific Journal of Science and Technology, **11** (1), pp. 173-232.
Available at: https://hal.archives-ouvertes.fr/hal-01128520