HAL
open science

The Theory of Braids and Energetic Lattices (part 1)

B Ravi Kiran, Jean Serra

To cite this version:

B Ravi Kiran, Jean Serra. The Theory of Braids and Energetic Lattices (part 1). 2016. hal-01532880

HAL Id: hal-01532880

https://hal.science/hal-01532880v1

Preprint submitted on 13 Jun 2017

HAL is a multi-disciplinary open access archive for the deposit and dissemination of scientific research documents, whether they are published or not. The documents may come from teaching and research institutions in France or abroad, or from public or private research centers.

L'archive ouverte pluridisciplinaire **HAL**, est destinée au dépôt et à la diffusion de documents scientifiques de niveau recherche, publiés ou non, émanant des établissements d'enseignement et de recherche français ou étrangers, des laboratoires publics ou privés.

The Theory of Braids and Energetic Lattices I - Minimization on Energetic Lattices

B.R. Kiran and J.Serra

3, March 2017

1 Notation

E : space under study; x, y points of E; $\mathcal{P}(E)$: set of the subsets of E, also called classes;
S, A : classes of E; T_j the sibling classes of S;
$\pi = \pi(E)$: partition of E;
$\pi(S)$: partial partition (in short p.p.) of support $S \in \mathcal{P}(E)$); the notation $\tau(S)$ is also used for p.p.
$\{S\}$ p.p. with unique class S (when there is no ambiguity, $\{S\}$ is just written S) ;
$\mathcal{D}(E)$ set of all p.p. for all supports $S \in \mathcal{P}(E)$;
$\leq, \wedge, \vee$: when applied to partitions, are relative to the refinement ordering;
$\sqcup$: concatenation of classes and p.p. i.e. $\pi(S) = S_1 \sqcup S_2 \Leftrightarrow S_1 \cup S_2 = S$ and $S_1 \cap S_2 = \varnothing$;
$H = \{\pi_i, i \in I\}$: hierarchy, i.e. family of increasing partitions;
$\mathcal{S} = \mathcal{S}(H)$ family of all classes of H;
cut π: partition of E into classes taken in H;
$\Pi(E)$ set of all partitions of E, which is a lattice for the refinement ordering;
$\Pi(E, H)$ set of all cuts of H, viewed as a lattice for the refinement ordering;
ω: energy, i.e. scalar function on $\mathcal{D}(E)$;
$\preceq_\omega, \curlywedge_\omega, \curlyvee_\omega$: ω-energetic ordering, infimum, and supremum, w.r.t. energy ω;
$\Pi(\omega, H)$: ω-energetic lattice on the cuts of H;
π^* minimal cut in an energetic lattice.

2 Reminder on Partitions

Partition Intuitively, a partition π, or $\pi(E)$, is a division of image domain E into classes which are pair-wise disjoint and whose union restores E in its entirety.

Definition 1. A partition π of the image domain E is a family of sets S:

$$\pi = \{S \subseteq E\} \tag{1}$$

where $S : E \to \mathcal{P}(E)$, and for each point $x \in E$, we have $x \in S(x)$, and

$$x, y \in E \quad \Rightarrow \quad S(x) = S(y) \quad \text{or} \quad S(x) \cap S(y) = \varnothing \tag{2}$$

These S are called the classes of the partition π

Refinement order and lattice The set of all partitions π of E forms a complete lattice $\Pi(E)$ for the partial ordering of the refinement, where $\pi_i \leq \pi_j$ when each class $S_i(x)$ of π_i is included in the class $S_j(x)$ of π_j at the same point $x \in E$:

$$\pi_i \leq \pi_j \quad \Leftrightarrow \quad S_i(x) \subseteq S_j(x). \tag{3}$$

This refinement lattice is denoted by $\Pi(E)$. The refinement infimum of a family $\{\pi_i, i \in I \subseteq \mathbb{R}\}$ in $\Pi(E)$ is the partition π whose class at point x is $\cap S_i(x)$, and the refinement supremum is the finest partition π' such that $S_i(x) \subseteq S'(x)$ for all $i \in I$ and $x \in E$.

Partial partition First introduced by Ronse in [25], a partial partition is a *local* partitioning of a subset $S \subseteq E$ of the input space.

Definition 2. A partial partition $\pi(S)$ of support $S \in \mathcal{P}(E)$ is a set,

$$\pi(S) = \{A_i | A_i \subseteq S, A_i \cap A_j = \emptyset\} = \pi \sqcap \{S\} \tag{4}$$

where $S = \cup A_i$, is called the support of partial partition $\pi(S)$.

Partial partitions appear in figure 3, for example. The restriction of partition π to those classes whose union forms the set S is denoted by $\pi(S) = \pi \sqcap \{S\}$, and the partial partition of S into the single class S is denoted by $\{S\}$.

Energy An *energy* ω is a real valued function over the family of partial partitions $\mathcal{D}(E)$ of space E:

$$\omega : \mathcal{D}(E) \to \mathbb{R} \tag{5}$$

When the energy ω of a p.p. is the sum of the energies of its classes, then ω is said to be *linear* [26] [14]

$$\omega(\pi(S)) = \sum_{T_i \in \pi(S)} \omega(T_i) \tag{6}$$

3 Reminder on Hierarchies of partitions

Hierarchy Hierarchies of partitions are the matter of an abundant literature (see for example [3], [21]). The definition that we propose here is based on two axioms:

Definition 3. (Hierarchy of Partitions(HOP)) A family $\{\pi_i, i \in I \subseteq \overline{\mathbb{Z}}\}$ of partitions of E defines a hierarchy when,

1. The partitions π_i are nested, i.e. they form a chain for the refinement ordering:

$$H = \{\pi_i, i \in I\} \quad \text{with} \quad i \leq k \;\Rightarrow\; \pi_i \leq \pi_k, \qquad I \subseteq \overline{\mathbb{Z}}, \tag{7}$$

   where the finest partition π_0 is called the leaves, and the coarsest one, is the root;

2. The number of leaves is finite in any class of the hierarchy, except possibly, in the class $\{E\}$.

One often takes the whole space $\{E\}$ for the root.

Classes and cuts A hierarchy can be described from its classes, or nodes. At each point $x \in E$ the family of all classes $S_i(x)$ containing x forms a closed chain of nested elements in $\mathcal{P}(E)$, from the leave $S_0(x)$ to E. This chain is called *the cone at point* x. Let $\mathcal{S} = \{S_i(x), x \in E, i \in I\}$ be the family of all classes of H. Class $\mathcal{S}$ is characterized by the implication

$$i \leq j \text{ and } x, y \in E \quad \Rightarrow S_i(x) \subseteq S_j(y), \text{ or } \; S_i(x) \supseteq S_j(y), \text{ or } S_i(x) \cap S_j(y) = \varnothing. \tag{8}$$

which generalizes the characterization (2) of the partitions. The classes of the partition π_{i-1} included in the class S_i of the partition π_i are *the sons* or *the siblings* of S_i, and hierarchy is said to be binary when each class has two sons exactly. The symbol $\sqcup$ refers to the disjoint union of classes, i.e.

$$S = S_1 \sqcup S_2 \Leftrightarrow S_1 \cup S_2 = S \text{ and } S_1 \cap S_2 = \varnothing.$$

A *cut* of H is a partition of the space E into classes taken in $\mathcal{S}$. The symbol $\Pi(E, H)$ stands for the set of all cuts of H. Clearly, $\Pi(E, H)$ is a sub-lattice of $\Pi(E)$, the lattice of all partitions of E. If $S \in \mathcal{S}(H)$, then $\Pi(S, H)$ denotes the family of all partial partitions of S whose classes are in $\mathcal{S}(H)$.

CART and cuts of minimal energy Classification and Regression Trees (CART) were introduced in the 80's by Breiman et al [6], which creates powerful and simple binary tree based models for classification and regression problems, in statistical learning theory. The method consisted in creating rectangular partition of a feature space (high dimensional $\mathbb{R}^n$), either fit a model over each of these rectangles in case of regression, produce a classification. These trees (now called decision trees) described then the estimator for the regression function, or a linear separator for classification tasks.

Salembier-Garrido and Guigues [26] [14] generalized the CART framework to families of partitions obtained from image segmentations[1]. The first two study binary partition trees, i.e. hierarchies of partitions created by using the max-tree representation, while Guigues considers a hierarchy created from complete linkage on regions of an over-segmentation [13], titled as Cocoons. In both studies a so called "dynamic programing" is used to find a cut of minimal energy, according to the rule described on the toy example of Figure

4 Discussion

The main features of these approaches, from Breiman to Guigues, set a few questions:

1- Number of cuts The principle of the method consists in allocating an energy with each cut, then to minimize the energy, and to state that the minimal energy characterizes a minimal cut. Now consider a binary hierarchy H of $n = 2^p$ leaves, where p is the number of levels. This hierarchy H generates more $2^{2^{P-1}}$ cuts. For example, in a small binary hierarchy

[1] They address the two issues of non-constrained and of constrained optimizations. The first one is presented here, and the second further.

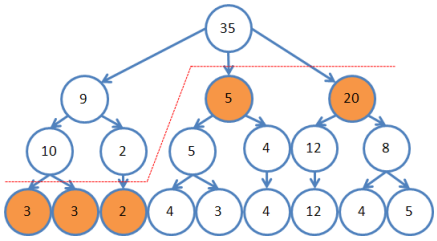

Figure 1: *Dynamic programing works as follows: the energy at any node S is compared to the sum of the energies of the children. If $\omega(S) \leq \sum \omega(T_k)$, T_k children of S, one keeps the class S; if not, one replaces S by its sons. The optimal cut is then the union of the remaining classes. It results here in the partition in dotted lines.*

of six levels, $n = 64$, and one finds $\simeq 10^{11,3}$ cuts, i.e. more than 100 times the population of the earth in 2013 (namely $7,125 \times 10^9$ persons). A basis of $n = 512$ leaves, which is common in image processing, provides $\simeq 10^{90}$ cuts, a number equal to that of all the particles of the universe... Can we really match a scalar energy with so many cuts?

2- An absent energy Moreover, though an energy is "officially" given to each cut, is it really used in the dynamic programing for minimization? The global energies of the cuts never appear during the processing, which just needs local energies to locally compare the cuts, and results in a global minimal cut whose energy is ususlly ignored. Here is an example. Imagine an infinite set of leaves covering the whole plane $\mathbb{R}^2$, like a huge chessboard, and a hierarchy H where all classes but the last one, E, admit a finite number of leaves. Take an additive energy ω equal to 1 on every class, and $+\infty$ for E. Then all cuts have an infinite energy, whereas the dynamic programing of figure **??** still works perfectly well. It is the concern of partial partitions, indeed, and it never needs the energy of the complete cuts to compare them. Again, the notion which is minimized should not be the energy of the cut.

3- Linearity Following Breiman' work, [6] where the energy of a partial partition is the sum of the energies of its constituent classes, most of the authors have adopted this linearity [26] [12] [14]. However other laws of compositions appear in literature, e.g. by supremum [34], [1], [38], or by infimum [30]**.** How to regroup all these modalities in a unique notion ?

4- Hierarchies only? The dynamic programing exclusively requires the comparison between fathers and siblings. It never imposes that a father has a unique set of siblings, i.e. that we are working with a hierarchy. Could we introduce classes which would present several decompositions into partial partitions?

These four comments govern the theoretical development which follows. Dynamic programing opens the way to the energetic ordering; the discrepancy between the numbers of cuts and of energies drives us to energetic lattice; the extension of the linearity directly leads to h-increasingness; and the braids turn out to generalize hierarchies.

5 Braid

To define the braids, we start from the lattice $\Pi(E)$ of the partitions of E, of minimal element the leaves partition π_0. Next we introduce a hierarchy H which serves as a parameter. A braid B is a family of partitions of E. The family B is not arbitrary, but monitored by a non-trivial hierarchy H, in the sense that the refinement supremum of any two elements of $\Pi(E, B)$ is a cut of H. This leads to the more formal definition:

Definition 4. (Braid of Partitions) Let $\Pi(E)$ be the complete lattice of all partitions of set E; let H be a hierarchy in $\Pi(E)$. A *braid* B of monitor H is a family in $\Pi(E)$ where the refinement supremum of any pair π_1, π_2 in B is a cut of H, other than $\{E\}$, and belongs to $\Pi(E, H) \setminus \{E\}$:

$$\forall \pi_1, \pi_2 \in B \quad \Rightarrow \quad \pi_1 \vee \pi_2 \in \Pi(E, H) \setminus \{E\} \tag{9}$$

The partition with one class $\{E\}$ is not considered in Equation 9, since this would imply that any family of arbitrary partitions would form a braid with $\{E\}$ as supremum, thus losing any useful structure. We also assume a locally finite number of classes in such cases, like in the case of hierarchies. Though the classes of supremums $\pi_1 \vee \pi_2$ are classes of monitor hierarchy H, the monitor by itself is not uniquely defined.

Cuts in braids Just as for the cuts of H, which were denoted by $\Pi(E, H)$, we now define the cuts of B as the partitions whose classes are taken in B, and denote the class of all these cuts by $\Pi(E, B)$.The hierarchy H may itself belong to the braid, or not. On the other hand, any hierarchy is a braid with itself as monitor. When $H \subseteq B$, we have $\Pi(E, H) \subseteq \Pi(E, B) \subseteq \Pi(E)$, i.e. the braid cuts $\Pi(E, B)$ are in between the cuts of the hierarchy H and the set of all partitions of E. A braid cannot be represented by a saliency, except when it reduces to a hierarchy whose classes are connected sets.

Braids and hierarchies The braids of partitions (BOP) provide alternatives to hierarchical structure in many ways. We state one direction here, where a composition law on tuples of hierarchies produces a braid.

Proposition 5. *Given three hierarchies H, H_1, H_2 formed from the same leaves, such that, $H_1 \leq H$, $H_2 \leq H$, then the family of partitions given by $\{H_1 \cup H_2\} \setminus \{E\}$ forms a braid with the monitor H.*

Here $H_1 \leq H$ on hierarchies says that each class of hierarchy H_1 is contained in the classes of H. The union of hierarchies form braids, while braids are not necessarily decomposable into hierarchies.

Cones of the monitor Let π_1, π_2, π_3 be three partitions of a braid B. We denote by S_{12}, S_{23}, S_{31} the classes at point x of the suprema $\pi_1 \vee \pi_2, \pi_2 \vee \pi_3$, and $\pi_3 \vee \pi_1$ respectively.

Proposition 6. *The three classes S_{12}, S_{23}, S_{31} are nested and the larger two are identical.*

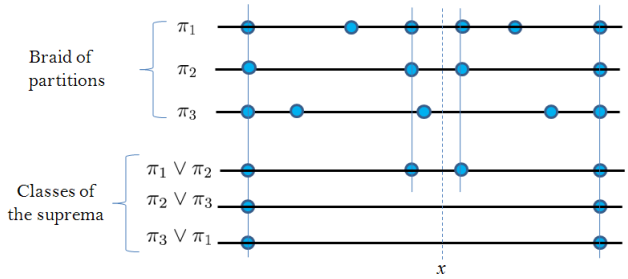

Figure 2: *Three braids and their suprema*

Proof. As S_{12}, S_{23}, S_{31} are classes of a hierarchy containing a same point, they are nested. Suppose for example that $S_{12} \subseteq S_{23} \subseteq S_{31}$. If $S_{12} = S_{23} = S$, then S is a union of classes of π_3 and π_1, and $S \supseteq S_{31}$. But we have also the reverse inequality by hypothesis, thus $S_{12} = S_{23} = S_{31}$. If not, S_{23} as class in a hierarchy, equals the union of the classes smaller than it. Such classes cannot come from $\pi_2 \vee \pi_3$, or $\pi_3 \vee \pi_1$ which are larger or equal to S_{23}. Therefore S_{23} is a union of classes of$\pi_1 \vee \pi_2$ hence of π_1. But by construction, it is also a union of classes of π_3. It thus contains S_{31}, and finally $S_{23} = S_{31}$. □

This property characterizes the braids without making explicit the monitor hierarchy, and can be useful as a starting point. It is illustrated by Figure 2

6 h-increasing energies

An energy $\omega \geq 0$ on p.p. may not lend itself to dynamic programing. For example, take for energy $\omega(\pi) = 1$ (resp. 2) when the number of classes of the p.p. π is 1 (resp. 2), and $\omega(\pi) = 0$ otherwise. Then, as shown in Figure 5 b and c, one finds two cuts of minimal energy, and none of them is reached by dynamic programing. The condition missed by this counter example is that of h-increasingness. It is a property of the energies ω on partial partitions $\mathcal{D}(E)$ which preserves the optimal substructure [28] [18].

h-increasingness is involved in three aspects of the theory. Firstly it serves as corner stone in the construction of energetic lattices, secondly it governs dynamic program for extracting minimal cuts, and, finally, it permits the global to local transition when the objects under study extend much more than the sampling regions, such as in remote sensing.

Definition 7. (h-increasingness) Let (τ_i, τ_i') be elements of two different p.p. of the same support S_i, and $\{S_i, S_i \in E, i \in I\}$ a family of disjoint supports. A finite singular energy ω on the partial partitions $\mathcal{D}(E)$ is *h-increasing* when for every triplet $\{\tau_i, \tau_i',\ S_i \in E, i \in I\}$ one has, $\forall i \in I$:

$$\omega(\tau_i) \leq \omega(\tau_i') \ \Rightarrow\ \omega(\sqcup\tau_i) \leq \omega(\sqcup\tau_i') \tag{10}$$

When in addition one has $\omega(\tau_i) < \omega(\tau_i')$ for one i at least, and when this leads to $\omega(\sqcup\tau_i) < \omega(\sqcup\tau_i')$, then the energy ω is strictly h-increasing.

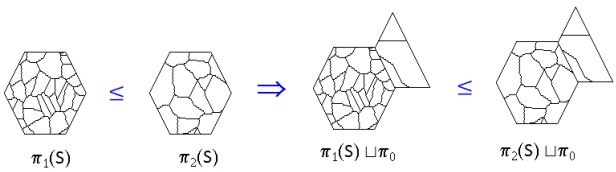

Figure 3: *Hierarchical increasingness*

For example, a linear energy, i.e. an energy where $\omega(\sqcup\tau_i)$ is the sum of the $\omega(\tau_i)$ is h-increasing, an even *strictly* h-increasing since

$$\omega(\tau_i) < \omega(\tau_i') \text{ for all } i \in I \quad \Rightarrow \quad \omega(\sqcup\tau_i) < \omega(\sqcup\tau_i').$$

Unlike, the h-increasing energy $\omega(\sqcup\tau_i) = \sum\omega(\tau_i)$ when $\sum\omega(\tau_i) < K$ and $= K$ when not, is not strictly h-increasing. The energies composed by supremum are also h-increasing, but not strictly.

Finite case When a finite family of partition is under study, then Definition 7 reduces to

$$\omega(\tau_1) \leq \omega(\tau_2) \Rightarrow \omega(\tau_1 \sqcup \tau_0) \leq \omega(\tau_2 \sqcup \tau_0) \tag{11}$$

The energies of two partial partitions τ_1 and τ_2 of same support S are compared. If the energy ω is h-increasing and $\omega(\tau_1) \leq \omega(\tau_2)$, this order is not changed when we concatenate a third p.p. τ_0 of support disjoint from S: Figure 3 shows the geometrical meaning of the h-increasingness.

When, in addition, ω is singular, then $\omega(\pi_1(S)) \neq \omega(\pi_2(S))$, and also $\omega[\pi_1(S) \sqcup \pi_0] \neq \omega[\pi_2(S) \sqcup \pi_0]$, so that Rel.(11) can be written in the reverse sense, i.e. by inverting the indexes 1 and 2:

$$\omega[\pi_1(S) \sqcup \pi_0] \leq \omega[\pi_2(S) \sqcup \pi_0] \Rightarrow \omega(\pi_1(S)) \leq \omega(\pi_2(S)) \tag{12}$$

h-increasingness permits also to concatenate the supports of the partial partitions. Consider two partitions π_1 and π_2 and two disjoint supports S, S' which satisfy the h-increasingness implication (11). We have

$$\begin{aligned} \omega(\pi_1(S)) \leq \omega(\pi_2(S)) &\Rightarrow \omega(\pi_1(S) \sqcup \pi_1(S')) \leq \omega(\pi_2(S) \sqcup \pi_1(S')) \\ \omega(\pi_1(S')) \leq \omega(\pi_2(S')) &\Rightarrow \omega(\pi_1(S') \sqcup \pi_2(S)) \leq \omega(\pi_2(S') \sqcup \pi_2(S)) \end{aligned} \tag{13}$$

hence

$$\omega(\pi_1(S \cup S')) \leq \omega(\pi_2(S \cup S')). \tag{14}$$

Generating h-increasing energies Any weighted sum of h-increasing energies is still h-increasing (they form a vector space). An easy way to generate basic energies in this vector space consists in providing the classes with an arbitrary energy, and to define the energy of the p.p. by composition of their classes. We already saw two laws of composition, by

addition and by supremum. Both laws are indeed particular cases of the classical Minkowski expression

$$\omega(\pi(S)) = \left[\sum_{u \in [1,q]} \omega(T_u)^\alpha \right]^{\frac{1}{\alpha}} \tag{15}$$

which is a norm in $\mathbb{R}^n$ for $\alpha > 0$. Even though over partial partitions $\mathcal{D}(E)$, it is no longer a norm, it yields strictly h-increasing energies for all $\alpha \in]-\infty, +\infty[$:

Proposition 8. *Let $E \in \mathcal{P}(E)$, let $\omega : P(E) \to \mathbb{R}$ be a positive or negative energy defined on $\mathcal{P}(E)$. Then the extension of ω to the partial partitions $\mathcal{D}(E)$ by means of Relation (15) is strictly h-increasing.*

Proof. Let $\pi(S)$ and $\pi'(S)$ be two p.p. of support S, with q, q' elements each, respectively. When $0 \leq \alpha < \infty$, the mapping $y = x^\alpha$ on $\mathbb{R}^+$ is strictly increasing and, according to Relation (15), the inequality $\omega(\pi(S)) < \omega(\pi'(S))$ implies

$$\sum_1^q [\omega(T_u)]^\alpha \leq \sum_1^{q'} [\omega(T'_u)]^\alpha \quad \Rightarrow \quad \sum_1^q [\omega(T_u)]^\alpha + \omega(\pi_0) \leq \sum_1^{q'} [\omega(T'_u)]^\alpha + \omega(\pi_0) \tag{16}$$

hence $\omega(\pi_1 \sqcup \pi_0) < \omega(\pi_2 \sqcup \pi_0)$. When $-\infty < \alpha \leq 0$, the sense of the inequality changes on both sides of implication in (16) but changes again when taking the $(.)^\alpha$. This again lead to $\omega(\pi_1 \sqcup \pi_0) < \omega(\pi_2 \sqcup \pi_0)$, and achieves the proof. .. □

One can easily check that the proposition remains true when $\omega : P(E) \to \mathbb{R}^-$ is a negative energy. For $\alpha = +\infty$ (resp.$-\infty$) Minkowski expression yields the supremum (resp. the infimum), which is h-increasing, but not strictly. A number of other laws are compatible with h-increasingness, such as alternating compositions, etc.[19]. Some particular cases of α are of interest, namely

α	$\omega(T_i)$ Composition Law	Applications
$-\infty$	infimum	Ground truth energies [18]
-1	harmonic sum	-
0	number of classes	CART classifier complexity [6]
$+1$	sum	Salembier-Garrido, Guigues [26], [12]
$+2$	quadratic sum	-
$+\infty$	supremum	Valero[38], Veganzones[39], Soille [34] ,

which all provide h-increasing energies. .

7 Energetic ordering and energetic lattice for braids

7.1 Climbing energies

The energies on partial partitions which allow minimizations by dynamic programing cannot be totally arbitrary. They must satisfy the axioms of *h-increasingness* that we just saw,

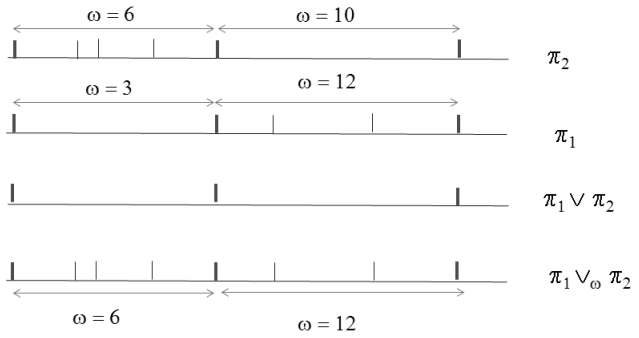

Figure 4: *The energetic ordering induces a lattice where one takes the less energetic partial partition in each class of* $\pi_1 \vee \pi_2$ *(here for a hierarchy).*

and also of *singularity* [28] [18]. Indeed, if some fathers in a braid have the same energies as their siblings, multiple optimal cuts may arise. It is for preventing such occurrences that singularity is introduced.

Definition 9. Let ω be an energy on the partial partitions $\mathcal{D}(E)$, and B be a braid B of monitor hierarchy H. Energy ω is singular when

1. the energy $\omega(\{S\})$ of every class S of H is either strictly smaller, or strictly greater, than the energies of all partial partitions of B of support S:

$$\forall\ \pi(S) \in \Pi(S), \omega(\{S\}) < \omega(\pi(S))\} \text{ or } \omega(\{S\}) > \omega(\pi(S))\}, \tag{17}$$

2. if $\forall \pi_1, \pi_2 \in B$ and $\pi_1 \vee \pi_2 = \{S\} \in \Pi(E, H)$, then $\omega(\pi_1) \neq \omega(\pi_2)$.

When the braid reduces to a hierarchy, the second axiom becomes useless.

Definition 10. An energy on the partial partitions of E is said to be climbing when it is both h-increasing and singular [18].

7.2 Energetic ordering and energetic lattice

Consider two cuts $\pi_1, \pi_2 \in \Pi(B)$ in a braid B of partitions, and their supremum $\pi_1 \vee \pi_2$ (see Figure 4). Intuitively, one may assess that, in some sense, π_1 is less energetic than π_2 for an energy ω when $\omega[\pi_1 \sqcap \{S\}] \leq \omega[\pi_2 \sqcap \{S\}]$ in each class S of $\pi_1 \vee \pi_2$. This intuition is true and has the meaning of an ordering relation if and only if the energy ω is climbing:

Theorem 11. *Let* $\Pi(B)$ *be a braid of partitions of* E*, and let* $\pi_1, \pi_2 \in \Pi$*. Given an energy* ω*, the partition* π_1 *is said to be less energetic than* π_2*, and one writes* $\pi_1 \preceq_\omega \pi_2$ *when in each class of* $\pi_1 \vee \pi_2$ *the energy of the partial partition of* π_1 *is smaller or equal to that of* $\pi_{2:}$:

$$\pi_1 \preceq_\omega \pi_2 \quad \Leftrightarrow \quad \{S \in \pi_1 \vee \pi_2 \ \Rightarrow \ \omega(\pi_1 \sqcap \{S\}) \leq \ \omega(\pi_2 \sqcap \{S\})\} \tag{18}$$

The relation $\preceq_\omega$ *is an ordering relation if and only if the energy* ω *is climbing.*

Proof. "If" part of the proof. The relation $\preceq_\omega$ is obviously reflexive. It is also anti-symmetrical, since the double condition $\pi_1 \preceq_\omega \pi_2$ and $\pi_2 \preceq_\omega \pi_1$ means that in each class S of $\pi_1 \vee \pi_2$ the energies of $\pi_1(S)$ and $\pi_2(S)$ are the same, which implies by singularity that S is a class of both π_1 and π_2, hence $\pi_1 = \pi_2$.

For the concern of transitivity, we consider three partitions π_1, π_2, π_3 of the braid B, and the classes $S_{12}, S_{23}, S_{31}$of the suprema $\pi_1 \vee \pi_2, \pi_2 \vee \pi_3$, and $\pi_3 \vee \pi_1$ at point x. We have to prove that $\pi_1 \preceq_\omega \pi_2$ and $\pi_2 \preceq_\omega \pi_3$ imply $\pi_1 \preceq_\omega \pi_3$. According to Proposition 6, there are three possibilities to order the three nested sets S_{12}, S_{23}, S_{31}depending upon the one taken to be the smaller. Take S_{12} for example. Then $S_{23} = S_{31} = S$ is a union of classes of π_1 and of π_2, hence of $\pi_1 \vee \pi_2$. In each of these classes $S_{12}, S'_{12}, .. \in S$ the energy of π_1 is $\leq$ than that of π_2. These inequalities extend to S by h-increasingness, and we can write $\omega(\pi_1(S)) \leq \omega(\pi_2(S))$. But we also have by hypothesis $\omega(\pi_2(S)) \leq \omega(\pi_3(S))$, hence $\omega(\pi_1(S)) \leq \omega(\pi_3(S))$. As S is an arbitrary class of $\pi_3 \vee \pi_1$, we finally obtain $\pi_1 \preceq_\omega \pi_3$, which proves transitivity when $S_{12} \subseteq S_{23} = S_{31}$. The two other cases admit similar derivations

For the "only if" statement, we must prove that the ordering vanishes either when ω is not singular or when ω is not h-increasing. Consider first an ordering $\preceq_\omega$ whose energy is not singular, and two cuts π and π' identical everywhere except in the class $S'(x)$, which is replaced by the p.p. τ. Suppose that $\omega(\tau) = \omega(S'(x))$. This implies $\pi \preceq_\omega \pi'$ and also $\pi' \preceq_\omega \pi$. However we do not have $\pi' = \pi$ since $\tau \neq S'(x)$. Thus singularity is needed. For proving the need of h-increasingness, take for ω the function equal to 1 on each class, plus the linear composition law and a constraint for the singularity. Introduce now the following exception: when the number of classes of a p.p. is 5, then its energy becomes infinite. ω is no longer h-increasing and transitivity is not satisfied, for example at point x in figure 2. This achieves the proof. □

The "only if" part of the theorem means that the braids and their cuts have the correct level of generality to lend themselves to a lattice. If one wants to build up energetic orderings on other families of partitions, the energy ω must be more specified. In particular, one can think of braids of order II, where the suprema are cuts of a braid (rather than of a hierarchy), braids of order III, etc.. Coming back to our standard braids, we now prove that the energetic order induces on them a complete lattice.

Theorem 12. *Let B be a braid of partitions of E, and ω be an energy on the partial partitions. The set of all cuts of B forms a complete lattice $\Pi(\omega, B)$ for the energetic ordering $\preceq_\omega$ if and only if the energy ω is climbing. Given a family $\{\pi_j, 1 \leq j \leq p\}$ of cuts in $\Pi(\omega, B)$, the infimum $\curlywedge_\omega \pi_j$ (resp. supremum $\curlyvee_\omega \pi_j$) is obtained by taking the p.p. of lowest energy (resp. highest energy) in each class of the refinement supremum $\vee \pi_j$.*

Proof. If the energy ω is not climbing, there is no energetic ordering, thus no possible lattice. We now suppose that ω is climbing and we treat the finite case in the first place.

A- *Finite number of leaves.* Let $\{\pi_i, i \in I\}$ be a finite family in $\Pi(\omega, B)$, and π_j, π_k two members of this family. Define the partition $\pi_j \curlywedge_\omega \pi_k$ by taking the less energetic of the two p.p. in each class of $\pi_j \vee \pi_k$. The partition $\pi_j \curlywedge_\omega \pi_k$ is a member of the set $\Pi(\omega, B)$, and it is $\preceq_\omega$-smaller than both π_j and π_k. Moreover, suppose that another partition $\pi_m \in \Pi(\omega, B)$ be

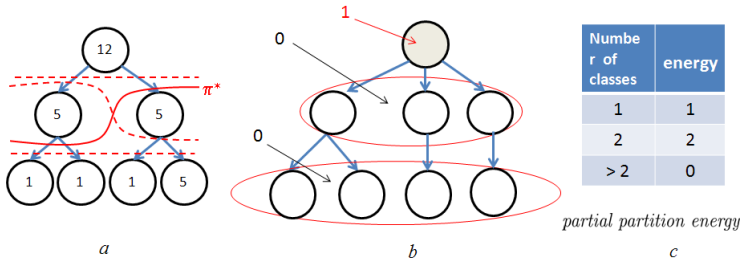

Figure 5: *a) in case of $\vee$-composition, there is a unique minimal cut π^* and its energy is minimal, but other cuts have also the same energy. b) and c) depict a non h-increasing energy $\omega(\pi)$ which depends on the number of classes of the p.p. π. The two cuts surrounded by ellipses are minimal (hence no energetic lattice), and none of them is obtained by dynamic program, which gives the cut in grey.*

also $\preceq_\omega$-smaller than both π_j and π_k. According to Proposition 6, at point x two of the three classes S_{jk}, S_{km}, and S_{mj} are identical. If $S_{jk} = S_{km} = S$, then this class S is the support of partial partitions of π_j, π_k, and π_m, and by h-increasingness $\omega(\pi_m(S) \leq \omega[(\pi_j \curlywedge_\omega \pi_k)(S)]$. For the same reason, we find the same inequality when $S_{km} = S_{mj}$ and when $S_{mj} = S_{jk}$. Therefore $\pi_j \curlywedge_\omega \pi_k$ is the largest lower bound of π_j and π_k.

As the number of leaves of B is finite, the number of partitions $\pi_j \curlywedge_\omega \pi_k$ with $i, k \in I$ is also finite, and their iterated minimizations lead to a partition $\pi_0 \in \Pi(\omega, B)$ smaller than all π_i. This π_0 is also the greatest lower bound of the π_i since if there exists in $\Pi(\omega, B)$ another π_{00} smaller or equal to all π_i, then it is also smaller or equal to the iterated $(\pi_j \curlywedge_\omega \pi_k) \curlywedge_\omega (\pi_{j'} \curlywedge_\omega \pi_{k'})$, etc., and finally to π_0. By duality, the family $\{\pi_i, i \in I\}$ admits a lower upper bound $\pi_1 \in \Pi(\omega, B)$,

B- *Infinite case* Let $\{S_j(x)\}$ be set of all classes at point x of a (possibly infinite) family $\{\pi_j, j \in J \subseteq I\}$ of cuts of B. We saw that these classes form a cone, and that their union $S_M(x) = \cup S_j(x)$, which belongs to H, has a finite number of leaves. Therefore the number of possible partitions of these leaves is finite, as well as the number of different partitions $\pi_j \sqcap \{S_M(x)$. The results of the finite case applies and leads to the local infimum $\wedge[\pi_j \sqcap \{S_M(x)\}]$. The global infimum is obtained by making x vary. Then, by h-increasingness, the partition $\wedge \pi_j = \sqcup\{\wedge[\pi_j \sqcap \{S_M(x)\}], x \in E\}$ is smaller than any other partition (Rel.(10)). By duality, we have also $\vee \pi_j = \sqcup\{\vee[\pi_j \sqcap \{S_M(x)\}], x \in E\}$, which achieves the proof. $\square$

As a consequence, the theorem indicates that dynamic programing no longer works as son as ω is not h-increasing, as depicted in Figure 5 b and c.

7.3 The two orderings $\preceq$ and $\leq$

h-increasingness allows us to bridge the gap between the energetic ordering $\preceq_\omega$ for partitions and the numerical ordering of their energies. Consider two cuts π and π' of a braid B, and denote by $\{S_i, i \in I\}$ the set of all classes of $\pi \vee \pi'$. If τ_i and τ'_i stand for the p.p. of support S_i of π and π' respectively, and ω for ah-increasing energy, then the left member of (10)

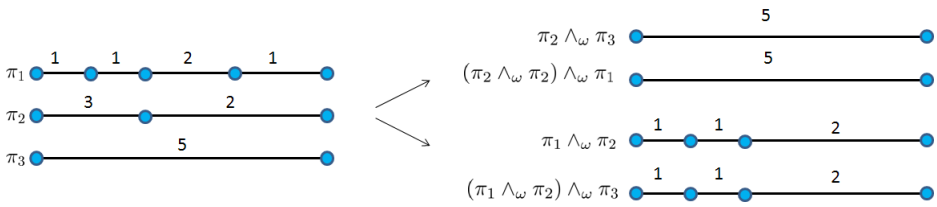

Figure 6: *Hierarchy with three levels.The energies of the classes are indicated. Those of the partial partitions are obtained by sums of their classes. the* $\curlywedge_\omega$*of the three partitions is not* $(\pi_2 \curlywedge_\omega \pi_3) \curlywedge_\omega \pi_1$

means that $\pi \preceq_\omega \pi'$ and the right one that $\omega(\pi) \leq \omega(\pi')$, hence:

$$\pi \preceq_\omega \pi' \quad \Rightarrow \quad \omega(\pi) \leq \omega(\pi'), \tag{19}$$

with in particular

$$\pi^* = \curlywedge_\omega\{\pi \in \Pi(E,B)\} \quad \Rightarrow \quad \omega(\pi^*) = \wedge\{\omega(\pi), \pi \in \Pi(E,B)\} \tag{20}$$

The inverse implication may be false, since several cuts can share the same energy, as demonstrated in figure 5. However in case of a climbing energy, the minimal cut is unique, and it is nothing but the infimum π^* of the energetic lattice.

Proposition 13. *When energy* ω *is climbing, when* $\omega(\pi)$ *is finite for one* ω *at least, and when the set* $\Pi(E,B)$ *is finite, then implication (20) becomes an equivalence.*

Proof. As energy ω is climbing, the set $\Pi(E,B)$ of all cuts of the braid B form a ω-lattice. By uniqueness of the minimum in this energetic lattice, $\pi^* \prec \pi$ for $\pi \in \Pi(E,B)\backslash\pi^*$. It means that there is a class S of $\pi^* \vee \pi$ such that $\omega(\pi^* \sqcap \{S\}) < \omega(\pi \sqcap \{S\})$. Moreover we draw from the second assumption of the proposition and from Rel. (19) that $\omega(\pi^*)$ is finite. As ω is climbing, this gives $\omega(\pi^*) < \omega(\pi)$, and by finiteness $\omega(\pi^*) < \wedge\{\omega(\pi), \pi \in \Pi(E,B)\backslash\pi^*\}$. Therefore, if a cut $\pi \in \Pi(E,B)$ has ω for energy, it can only be π^*. □

8 Climbing energies and local knowledge

In earth sciences, most phenomena largely exceed the regions Z in which they are studied. Air-borne and satellites images are of this type. Optimal segmentation of such phenomena must be reached by local, or regional information, and not via a global energy, which would involve the whole space. Here the second axiom of a hierarchy (in definition 3), which states that the number of leaves is finite in any class of the hierarchy, except possibly, in the class $\{E\}$, opens the door to a regional approach.

A toy example is given by the following hierarchy of nested partitions of $\overline{\mathbb{Z}}$ where the

central class enlarges:

$$
\begin{array}{ll}
i=0 & \pi_0 = \text{ all points of } \overline{\mathbb{Z}} \\
i=1 & \pi_1 = \{-\infty\}...\{-3\};\{-2\};[-1,+1];\{+2\};\{+3\}...\{+\infty\}. \\
i=2 & \pi_2 = \{-\infty\}...\{-4\};\{-3\};[-2,+2];\{+3\};\{+4\}...\{+\infty\}. \\
i=3 & \pi_3 = \{-\infty\}...\{-5\};\{-4\};[-3,+3];\{+4\};\{+5\}...\{+\infty\} \\
\multicolumn{2}{l}{\dots\dots\dots\dots\dots\dots}
\end{array}
$$

Though $|I| = \infty$, the number of leaves at any class $S_i(x)$, $x \in \mathbb{Z}$ remains finite as soon as the label $i < \infty$.

Take now the case of a satellite image accessible in the window Z, small w.r.t. the surface of the earth. Some previous processing of this image results in a hierarchy H_Z with $n+1$ levels i ($i = 0$ for the leaves and $i = n$ for Z) and we want to find its minimal cut according to a h-increasing energy. H_Z is the restriction to Z of the hierarchy H of infinite extension which should be obtained if we could access the whole space, i.e. $H_Z = H \sqcap \{Z\}$. It is composed by all classes of H included in Z. We admit that the objects of interest are small enough so that every class of the level $n-1$ can be covered by a convenient Z. The minimal cut π_Z^* of H_Z is computed by the usual dynamic program. As ω is $H_Z = H \sqcap \{Z\}$, and as the implication (19 accepts an infinite number of operands, all classes of π_Z^* different from Z itself are also classes of the minimal cut π^* of the *whole hierarchy* H.

9 Rebuilding

Theorem 12 shows also that given the finite family $\{\pi_i, i \in I\}$ of partitions, there are two ways for calculating its $\curlywedge_\omega$-infimum. If we do not order them, we must take $\pi_j \curlywedge_\omega \pi_k$ for *all* pairs π_j, π_k in the family, but not calculate $(((\pi_j \curlywedge_\omega \pi_k) \curlywedge_\omega \pi_l) \curlywedge_\omega \pi_m$ etc., as demonstrated by Figure 6. Alternatively, we can exhibit a sub-hierarchy generated by all classes of the π_i and only by them, and minimze it by dynamic programing. We now develop this second solution.

9.1 Case of a hierarchy

Consider the family $\Pi_J = \{\pi_j, 1 \leq j \leq J < \infty\}$ of J cuts of an unknown hierarchy H of set of cuts Π. We propose to build up a sub-hierarchy H' of H made of all classes of Π_J and uniquely with them.

Put $\pi_0 = \wedge \pi_j$. The classes $a, b,$ etc. of π_0 form the leaves of H', and, as J is finite, each class $a, b,$ etc. of π_0 turns out to be a class of one π_j at least.

Define the cones $\{a_k, 1 \leq k \leq J\}$ of summits a, b, etc. whose increasing classes are taken in the π_j (see figure 7). At each level k the classes a_k, b_k, etc. form a partition. Indeed, they are nested or disjoint, and they cover the space because each of them contains one leaf at least. Moreover, these partitions increase with k because they classes come from increasing sections of cones. Hence they form a hierarchy, and we can state

1. *Let $\Pi_J = \{\pi_j, 1 \leq j \leq J < \infty\}$ be a family of cuts of a hierarchy H, and $\mathcal{S}_J$ be the set all all classes of the π_j. Then there exists a unique hierarchy H' with J levels and whose classes are exclusively all elements of $\mathcal{S}_J$.*

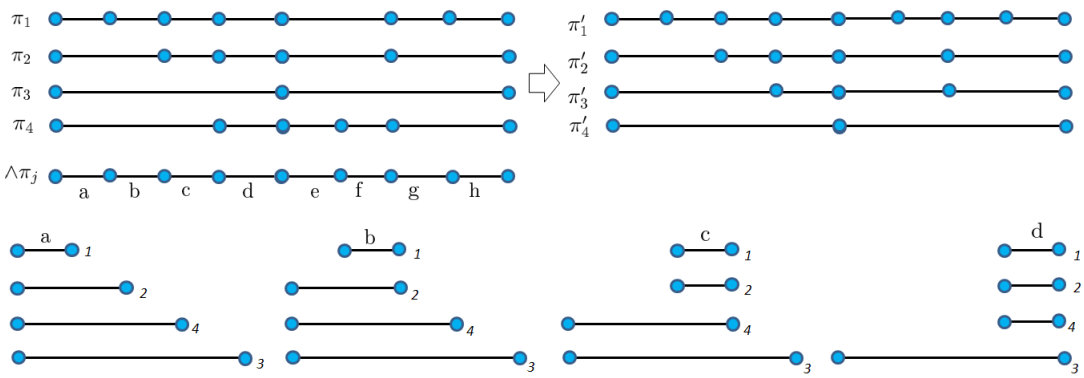

Figure 7: *Four cuts π_j in an unknown hierarchy H'. The associated cones allow to find the four levels π'_j of H'.*

Note that it is a purely geometric property of the hiearchies, which does not requires any energy.

9.2 Case of a braid

In case of a braid we must construct the smallest partial monitor H'' whose classes are suprema of the π_j. For each leave, e.g. b, when ascending the cone of summit b, we must replace the first two classes which are not nested, e.g. b_2 and b_4, by the class of the supremum $\pi_2 \vee \pi_4$ which contains b.

The algorithm which gives the partial monitor H' must determine the children of each class of the $\{\pi_k\}$:

- Consider the infimum$\pi_0 = \wedge\{\pi_j\}$,
- Determine all cones of summits the classes (or leaves) of π_0,
- for each class c in π_0; consider the cone at c. For each level k in this cone, if $c_k \subseteq c_{k+1}$, then keep c_k. If $c_k \nsubseteq c_{k+1}$then replace both of them by the class of $\pi_k \vee \pi_{k+1}$ that contains c
- Continue by going up from all leaves to the root.

At the end the monitor hierarchy for family $\{\pi_j\}$ is completely determined (see figure 8)

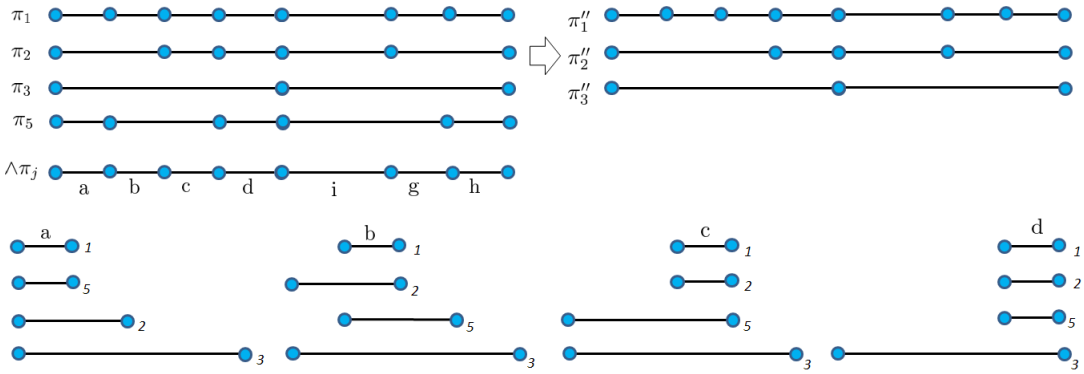

Figure 8: *Four cuts π_j in an unknown braid of an unkown partial monitor H''. The associated cones allow to find the three levels π''_j of H''.*

References

[1] Akcay, H.G., Aksoy, S.: Automatic detection of geospatial objects using multiple hierarchical segmentations. *IEEE T. Geoscience and Remote Sensing* 46 (2008) pp.2097-2111

[2] Angulo, J., Jeulin, D.: Stochastic watershed segmentation. In: Banon, G.J.F., Barrera, J., Braga-Neto, U.d.M., Hirata, N.S.T. (eds.) Proceedings, (ISMM), Rio de Janeiro. vol.˜1, pp. 265–276. Universidade de Sao Paulo (USP), Instituto Nacional de Pesquisas Espaciais (INPE), Sao José dos Campos (Oct 2007)

[3] Arbelaez, P., Maire, M., Fowlkes, C., Malik, J.: Contour detection and hierarchical image segmentation. IEEE Trans. PAMI 33(5), 898–916 (may 2011)

[4] E.T.Bell, Exponential numbers, American Mathematical Monthly 41(7) (1934) 411-419.MR1523147. /http://oeis.org/A000110

[5] §§§

[6] Breiman, L., Friedman, J.H., Olshen, R.A., Stone, C.J.: Classification and Regression Trees. Wadsworth (1984)

[7] Ballester, C., Caselles, V., Igual, L., Garrido, L.: Level lines selection with variational models for segmentation and encoding. Journal of MathematicalImaging and Vision 27(1), 5–27 (2007)

[8] Cousty, J., Najman, L.: Incremental algorithm for hierarchical minimum spanning forests and saliency of watershed cuts. In: Soille, P., Pesaresi, M.,Ouzounis, G.K. (eds.) ISMM. LNCS, vol. 6671, pp. 272–283. Springer (2011)

[9] §§§ (Cousty Najman Serra 2008 Icip Raising)

[10] E. Diday Spatial Pyramidal Clustering Based on a Tessellation. Proceedings IFCS'2004, in Banks et al (Eds.): *Data Analysis, Classification and Clustering Methods* Springer-Verlag, Heidelberg (2004).

[11] Everett, H.: Generalized lagrange multiplier method for solving problems of optimum allocation of resources. Operations Research 11(3), 399–417 (1963)

[12] Guigues L., *Modèles multi-échelles pour la segmentation d'images.*Thèse doctorale Université de Cergy-Pontoise, décembre 2003.

[13] §§§ (Guigues Cocoons)

[14] Guigues L., Cocquerez J.P., Le Men H., Scale-Sets Image Analysis, *Int. Journal of Computer Vision* 68(3), 289-317, 2006.

[15] Haxhimusa, Y., Kropatsch, W., 2004. Segmentation graph hierarchies, in: Fred, A., Caelli, T., Duin, R., Campilho, A., de Ridder, D. (Eds.), Structural, Syntactic and Statistical Pattern Recognition. Springer Berlin Heidelberg. volume 3138 of Lecture Notes in Computer Science, pp. 343–351.

[16] Climbing: A unified approach for global constraints on hierarchical segmentation, ECCV 2012 Workshop.

[17] B. R. Kiran, J. Serra**,** Ground truth energies for hierarchies of segmentations, in *Mathematical Morphology and Its Applications to Signal and Image Processing*, C.J. Luendo Hendricks, G. Borgefors Robin Strand (Eds.) *LNCS 7883* Springer, pp. 123-134, 2013.

[18] Kiran B. R., Serra J., Global-local optimizations by hierarchical cuts and climbing energies, *Pattern Recognition* 47 (2014) 12–24

[19] Kiran, B.R.: *Energetic Lattice based optimization.* Ph.D. thesis, Université Paris-Est, LIGM-A3SI, ESIEE (2014)

[20] §§§ (Meyer 2007 Flooding)

[21] Meyer, F., Adjunctions on the lattice of dendrograms, submitted to *GBR2013*

[22] J. Morel and S. Solimini. Variational Methods in Image Segmentation. Birkhauser, 1995.

[23] Mumford D. and Shah J., Boundary Detection by Minimizing Functionals, in *Image Understanding*, S. Ulmann and W. Richards Eds, 1988.

[24] §§§ (Najman 1996 saliency)

[25] Ronse, C., Partial partitions, partial connections and connective segmentation. Journal of Mathematical Imaging and Vision 32 (2008) 97–125

[26] Salembier P., Garrido L., Binary Partition Tree as an Efficient Representation for Image Processing, Segmentation, and Information Retrieval. *IEEE Trans. on Image Processing,* 2000.

[27] J. Serra, B. R. Kiran, Optima on Hierarchies of Partitions *in* Mathematical Morphology and Its Applications to Signal and Image Processing*, C.J. Luendo Hendricks, G. Borgefors Robin Strand (Eds.)* LNCS 7883 Springer pp. 147-158, 2013

[28] Serra J., Hierarchy and Optima, in *Discrete Geometry for Computer Imagery*, I. Debled-Renneson et al.(Eds) LNCS 6007, Springer 2011, pp 35-46

[29] B. R. Kiran, J. Serra**,** Scale Space Operators on Hierarchies of Segmentations, *SSVM,*August 2013

[30] B. R. Kiran, J. Serra, Fusions of Ground Truths and of Hierarchies of Segmentations, *Pattern Recognition Letters* 2014, 63-71

[31] B. R. Kiran, J. Serra, Optimal Cuts on Hierarchies and on Braids of Partitions Tech. Report ESIEE, May 2014

[32] B. R. Kiran, J. Serra, Braids of partitions in Mathematical Morphology and Its Applications to Signal and Image Processing*, J. A.Benediktsson, J. Chanussot, L.Najman, H.Talbot (Eds.)* LNCS 9082 Springer 217-228, 2015

[33] J. Serra, B. R. Kiran, Constrained Optimization on Hierarchies and Braids of Partitions in Mathematical Morphology and Its Applications to Signal and Image Processing*, J. A.Benediktsson, J. Chanussot, L.Najman, H.Talbot (Eds.)* LNCS 9082 Springer 229-240, 2015

[34] Soille, P., Constrained connectivity for hierarchical image partitioning and simplification. IEEE Transactions on Pattern Analysis and Machine Intelligence 30 (2008)1132–1145

[35] Tochon G., Dalla Mura M., Chanussot J., Segmentation of Multimodal Images based on Hierarchies of Partitions in Mathematical Morphology and Its Applications to Signal and Image Processing*, J. A.Benediktsson, J. Chanussot, L.Najman, H.Talbot (Eds.)* LNCS 9082 Springer 241-252, 2015

[36] Xu Y., Géraud T., Najman L., Context-based energy estimator: application to object segmentation on the tree of shapes. ICIP 2012

[37] Tomasz Malisiewicz, Alexei A. Efros: Improving Spatial Support for Objects via Multiple Segmentations. BMVC 2007: 1-10

[38] Valero, S.: Hyperspectral image representation and Processing with Binary Partition Trees. phd, Universitat Politecnica de Catalunya (UPC) (2011)

[39] Veganzones, M., Tochon, G., Dalla-Mura, M., Plaza, A., Chanussot, J.: Hyperspectral image segmentation using a new spectral unmixing-based binarypartition tree representation. ITIP 23(8), 3574–3589 (Aug 2014)