HAL
open science

Decentralized control strategy of a fuel cell/secondary storage element power supply system

Imad Eddine Aiteur, Cristina Vlad, Emmanuel Godoy

To cite this version:

Imad Eddine Aiteur, Cristina Vlad, Emmanuel Godoy. Decentralized control strategy of a fuel cell/secondary storage element power supply system. 16th International Conference on Control, Automation and Systems (ICCAS 2016) 2016, Oct 2016, Gyeongju, South Korea. 10.1109/ICCAS.2016.7832326 . hal-01472853

HAL Id: hal-01472853

https://hal.science/hal-01472853v1

Submitted on 16 Mar 2020

HAL is a multi-disciplinary open access archive for the deposit and dissemination of scientific research documents, whether they are published or not. The documents may come from teaching and research institutions in France or abroad, or from public or private research centers.

L'archive ouverte pluridisciplinaire **HAL**, est destinée au dépôt et à la diffusion de documents scientifiques de niveau recherche, publiés ou non, émanant des établissements d'enseignement et de recherche français ou étrangers, des laboratoires publics ou privés.

Decentralized control strategy of a fuel cell/secondary storage element power supply system

Imad Eddine Aiteur, Cristina Vlad and Emmanuel Godoy
Laboratoire des Signaux et Systèmes (L2S, UMR CNRS 8506)
CentraleSupélec-CNRS-Université Paris-Sud
Automatic Control Department
3, rue Joliot Curie
91192, Gif-sur-Yvette cedex, France
E-mail: {imad-eddine.aiteur, cristina.vlad, emmanuel.godoy}@centralesupelec.fr

***Abstract*—This article presents a decentralized control strategy applied to a multi-source power system having a fuel cell (FC) system as a main power source and a secondary storage element (SSE) for peak current supply during transients and energy recovery during braking. The dedicated control structure aims to assure an optimal operation of the FC system and a desired energy level of the SSE. To attain these objectives, a dynamic model of the FC system (stack and auxiliary devices necessary to fuel cell operation) is used, in addition to the SSE dynamics. The FC system regulation and the control of the SSE state of energy are performed separately with two different controllers, both designed using a model predictive control (MPC) approach. A first controller is employed in order to ensure a high efficiency of the FC system while respecting the compressor physical limits (limited voltage of the compressor motor, bounded operation region). The performances of the MPC strategy are evaluated in simulation and compared to the ones of a classic PID regulator. A second controller is used to obtain a desired SSE charge level for a given load profile, by guaranteeing a positive FC current and a bounded state of energy. The decentralized control approach proposed for this multivariable system allows to reduce the computational complexity, compared to a centralized approach. The validation of the control structure is performed in simulation using a nonlinear model of the FC system.**

I. INTRODUCTION

Over the last few years, the use of fuel cell systems associated with additional storage/supply power sources (batteries or supercapacitors) has become an attractive alternative to fossil fuels in transport applications, in particular for electric traction vehicles. Certainly, the FC system has many advantages such as high efficiency, high power density, long cell and stack life and low CO_2 emissions [1]. However, it is also characterized by a slow dynamics (response time of $\sim$ a few seconds). Therefore, secondary storage elements (battery, super-capacitor) are necessary to supply the power demand during fast transients and to recover energy during braking phases.

Generally, the fuel cell system represents the main power source of a multi-source system of an electric vehicle. For power generation, the FC stack is supplied with air (oxygen) by a compressor via a supply manifold, and compressed hydrogen (supposed available in a hydrogen tank). The global multi-source system efficiency depends essentially on the fuel cell system efficiency but also the compressor operating conditions and the power losses in the system auxiliaries (valves, pumps, expander vanes, compressor motors, fan motors, humidifiers and condensers). In order to maintain optimal performance of the fuel cell, the oxygen starvation phenomenon [2] should be avoided. For fast variations of power demand, due to the limited air supply rate, the partial oxygen pressure decreases below a critical limit, causing stack voltage degradation, efficiency reduction and possibly stack damage. Thus, it is necessary to control the air flow provided to the cathode, or more precisely the excess oxygen ratio in the cathode λ_{O_2}, defined as the ratio between the supplied and reacted oxygen. Moreover, the air supply rate depends on the manifold dynamics and the compressor operation within a nominal region, specified by the surge and choke constraints [3]. The surge constraint represents a bound for air flow variations, whereas the choke constraint is given by the maximum amount of air that the compressor can provide. Usually, these constraints become active during hard braking and rapid acceleration respectively.

In the literature, the operating constraints of a FC system have been highly investigated [2], [4] and discussed in the context of multi-source power systems used for electric vehicle propulsion. Furthermore, different control approaches have been adopted to prevent the oxygen starvation problem at the cathode of the FC and to satisfy the compressor operating constraints. In [5], Pukrushpan applies LQR control strategy to the linearized 9th order model in order to maintain the excess oxygen ratio to its optimal value. In [6], a fast reference governor approach is proposed, based on the definition of a maximal constraint admissible set and a reduced linear model of the FC, to satisfy the surge and choke constraints and to achieve an optimal level of λ_{O_2} ratio. In addition to this, in [7], a stability-based control strategy is developed for the air supply system control using a reduced non-linear FC model.

On the other hand, this issue has also been considered for a multi-source FC/ultracapacitor system. Vahidi proposes two approaches to prevent oxygen starvation and to control the ultracapacitor state of charge: a centralized model predictive control [8] and a decentralized MPC approach [9] for which the power split between the two sources in managed by a supervisor. However, these solutions use a linear model of the FC system and cannot be applied for load profiles that correspond to real driving cycles.

The proposed decentralized MPC approach has the following objectives: regulate the excess oxygen ratio to an optimal reference value while the nominal operation of the compressor is guaranteed (i.e. the air pressure in the supplied manifold evolves within an admissible region) and maintain the energy level of the SSE to a desired value in presence of load variations. In this article, the linear MPC algorithm is developed, based on a reduced order model of the FC system, linearized around an operating point. This approach can further be improved to take into account the non-linear behaviour of the system such that it can be applied in real driving conditions. Besides, as this solution allows to optimize the global efficiency of the multi-source system, the hydrogen consumption would also be reduced. Various studies have already addressed energy management issues between different sources in order to optimize the overall system performance. However, the optimization approaches [10]-[12] are usually based on static models of the FC, constraints being added to take into account the physical limitations of the system without considering the fuel cell dynamics.

This work is organized as follows: the FC control model and the dynamics of the SSE state of energy are described in Section II. In Section III, the decentralized control structure is presented, by designing predictive controllers to achieve each objective. Simulation results using the non-linear reduced order model of the FC system are shown in Section IV. The control structure is compared to a similar one, where the FC control is realized with a PID regulator. Finally, conclusions and perspectives of this work are given in Section V.

II. Modeling

For the multi-source power system, a parallel architecture [13] is considered. The fuel cell and the secondary storage element are connected to DC bus through a step-up DC-DC converter and a bi-directional DC-DC converter respectively, as illustrated in Fig 1.

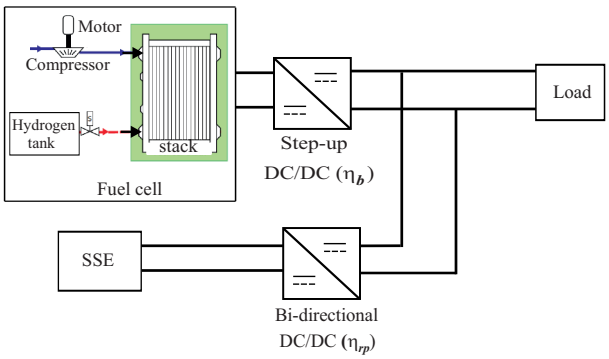

Fig. 1. FC/SSE multi-source power system.

A. Fuel cell model

The fuel cell (FC) is an electrochemical system that converts the chemical energy into electrical energy, generated as a result of the redox reaction between hydrogen and oxygen from air.

The chosen FC system consists of a polymer electrolyte membrane fuel cell (PEMFC) stack, air compressor, hydrogen tank and humidifier [4]. Its dynamic behavior has already been modeled by Pukrushpan and represented by a 9th order non-linear model [4]. In [2], simplifying assumptions allowed to obtain a reduced 4th order model of the FC system given as follows:

$$\begin{cases} \dot{x}_1 = d_1(x_4 - x_1 - x_2 - d_2) - \frac{d_3 x_1 \psi(x_1,x_2)}{d_4 x_1 + d_5 x_2 + d_6} - d_7 i_{fc} \\ \dot{x}_2 = d_8(x_4 - x_1 - x_2 - d_2) - \frac{d_3 x_2 \psi(x_1,x_2)}{d_4 x_1 + d_5 x_2 + d_6} \\ \dot{x}_3 = -d_9 x_3 - \frac{d_{10}}{x_3}\left[\left(\frac{x_4}{d_{11}}\right)^{d_{12}} - 1\right] W_{cp}(x_3,x_4) + d_{13} v_{cm} \\ \dot{x}_4 = d_{14}\left[1 + d_{15}\left[\left(\frac{x_4}{d_{11}}\right)^{d_{12}} - 1\right]\right][W_{cp}(x_3,x_4) \\ \qquad -d_{16}(x_4 - x_1 - x_2 - d_2)] \end{cases} \tag{1}$$

with: $x(t) = (P_{O_2}(t) \quad P_{N_2}(t) \quad \omega_{cp}(t) \quad P_{sm}(t))'$,
$\psi(x_1,x_2) = d_{20}(x_1 + x_2 + d_2)$,
$W_{cp}(x_3,x_4) = d_{25}\left[1 - e^{d_{26}\left(\left(\frac{x_4}{d_{11}}\right)^{d_{12}} - 1\right) x_3^{-2} - \beta}\right] x_3$,

P_{O_2} - the oxygen partial pressure, P_{N_2} - the nitrogen partial pressure, ω_{cp} - the compressor velocity, P_{sm} - pressure downstream of the compressor, $\psi(x_1,x_2)$ - the cathode output mass flow, $W_{cp}(x_3,x_4)$ - the compressor mass flow, i_{fc} - the fuel cell current, v_{cm} - the compressor voltage, $d_i, i = 1:26$ - constant parameters given in [7].

Even after simplification, the reduced model is highly non-linear because of the term that contains the cathode output mass flow. Yet, by considering the assumptions stated in [7]: (i) the term $(d_4 x_1 + d_5 x_2 + d_6)$ can be approximated by $k(x_1 + x_2 + d_2)$ with k a positive constant, (ii) the cathode output mass flow can be written as a linear expression that depends on the oxygen and nitrogen partial pressures such that $\psi(x_1,x_2) = d_{20}(x_1 + x_2 + d_2)$, the simplified state space model can be obtained:

$$\begin{cases} \dot{x}_1 = d_1(x_4 - x_1 - x_2 - d_2) - \frac{d_3 d_{20}}{k} x_1 - d_7 i_{fc} \\ \dot{x}_2 = d_8(x_4 - x_1 - x_2 - d_2) - \frac{d_3 d_{20}}{k} x_2 \\ \dot{x}_3 = -d_9 x_3 - \frac{d_{10}}{x_3}\left[\left(\frac{x_4}{d_{11}}\right)^{d_{12}} - 1\right] W_{cp}(x_3,x_4) + d_{13} v_{cm} \\ \dot{x}_4 = d_{14}\left[1 + d_{15}\left[\left(\frac{x_4}{d_{11}}\right)^{d_{12}} - 1\right]\right][W_{cp}(x_3,x_4) \\ \qquad -d_{16}(x_4 - x_1 - x_2 - d_2)] \end{cases} \tag{2}$$

Based on model (2), the excess oxygen ratio is expressed as:

$$\lambda_{O_2} = \frac{d_{23}}{d_{24} i_{fc}}(x_4 - x_1 - x_2 - d_2) \tag{3}$$

Let us consider the steady state operating point given by the nominal fuel cell current $I_{fc,0}$, the compressor voltage value $V_{cm,0}$, the corresponding equilibrium point $(X_{10}, X_{20}, X_{30}, X_{40})$ and the optimal $\lambda_{O_2,0}$ value equal to 2. At this value, the fuel cell provides the maximum net power with respect to the chosen nominal current. The linearization around this operating point yields a linear model of the FC

system:

$$\begin{cases} \dot{\tilde{x}}(t) = A\tilde{x}(t) + B_u\tilde{v}_{cm}(t) + B_w\tilde{i}_{fc}(t) \\ \tilde{y}(t) = C\tilde{x}(t) + D_u\tilde{v}_{cm}(t) + D_w\tilde{i}_{fc}(t) \end{cases} \quad (4)$$

with: $\tilde{y}(t) = \lambda_{O_2}(t) - \lambda_{O_2,0}$, $\tilde{v}_{cm}(t) = v_{cm}(t) - V_{cm,0}$, $\tilde{i}_{fc}(t) = i_{fc}(t) - I_{fc,0}$.

B. Secondary storage element model

According to control objectives, the secondary storage element (SSE) behavior is given by the dynamics of its state of energy (SoE). The normalized SoE is defined as $SoE(t) = \frac{E_{sse}(t)}{E_{sse,max}}$, where $E_{sse}(t)$ and $E_{sse,max}$ are the instantaneous energy stored in the SSE and the maximum SSE energy level, respectively. Thus, the SoE dynamics is the following:

$$\frac{dSoE}{dt}(t) = -\frac{P_{sse}(t)}{E_{sse,max}} = -\frac{P_{load}(t) - \eta_b P_{fc,net}(t)}{\eta_{rp} E_{scmax}} \quad (5)$$

where $P_{fc,net}(t) = i_{fc}(t)v_{fc}(t) - P_{loss}(t)$ represents the net power drained of the FC system, v_{fc} is the fuel cell voltage calculated as a function of the stack current, oxygen and nitrogen partial pressures [3] and P_{loss} is the compressor power loss, obtained based on the knowledge of the compressor voltage (v_{cm}) and pressure downstream of the compressor (P_{sm}) [3]. η_b, η_{rp} are the efficiencies of step-up and bi-directional DC-DC power converters and P_{load}, P_{sse} represent the power demand and the power supplied by the SSE, respectively.

Using the previous operating point, the SoE linearized model is:

$$\dot{\tilde{SoE}}(t) = \frac{\eta_b V_{fc,0}}{\eta_{rp} E_{sse,max}}\tilde{i}_{fc}(t) + \frac{\eta_b I_{fc,0}}{\eta_{rp} E_{sse,max}}\tilde{v}_{fc}(t) - \\ -\frac{1}{\eta_{rp} E_{sse,max}}(\tilde{P}_{load}(t) + \eta_b \tilde{P}_{loss}(t)) \quad (6)$$

where $\tilde{SoE}(t)$, $\tilde{v}_{fc}(t)$, $\tilde{P}_{load}(t)$ and $\tilde{P}_{loss}(t)$ are the variables deviation from their operating conditions.

The models given in equations (4) and (6) are used subsequently in Section III for FC system and SoE control.

III. Decentralized Control Strategy

The decentralized control approach consists in designing a model predictive controller for each source of the multi-source power system. The advantage of a decentralized control stategy is that it reduces the online computations and allows the parallel computation of control variables, which is convenient for real time implementation. Fig. 2 illustrates the proposed control structure.

First, a MPC strategy is applied to control the excess oxygen ratio λ_{O_2} by taking into account the operating constraints of the compressor, which improves the FC system efficiency. The dedicated controller (MPC 1) computes the compressor output voltage v_{cm} while the fuel cell current i_{fc} is considered as a known disturbance.

Secondly, a predictive controller (MPC 2) is designed to maintain the SSE state of energy (SoE) to the desired value SoE_{ref}. Using this control approach, the SoE evolution is bounded between its minimum and maximum values (SoE_{min}, SoE_{max}). This condition is necessary when power demand is representative of real driving conditions, as it prevents a complete discharge or overcharge of the SSE. The controller computes the fuel cell current i_{fc}, whereas the power demand P_{load} and the FC output voltage v_{fc} are considered as measured disturbances. Then, the FC current is transmitted to MPC 1 controller.

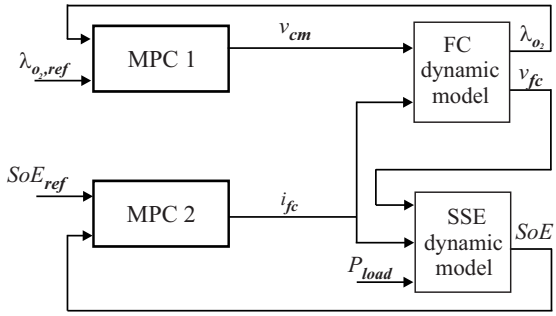

Fig. 2. Decentralized control structure.

A. Fuel cell system control

The controller used for the FC system should be able to cope with operational constraints which ensure a high efficiency of the system and its safe operation. The control objectives are the following:

- maximize the FC net power by keeping the excess oxygen ratio λ_{O_2} to its optimal reference value (i.e. $\lambda_{O_2} = 2$);

- minimize the compressor power consumption. This objective is accomplished as long as the compressor operates within a nominal region, which avoids power loss and even compressor damage. Around an operating point, the nominal operating region is defined by two lines: the surge (pumping) line and the choke (locking) line. These lines are expressed in function of the mass flow W_{cp} and the pressure downstream of the compressor P_{sm} [14] as follows:

$$\alpha_1 W_{cp} + \alpha_2 \leq P_{sm} \leq \alpha_3 W_{cp} + \alpha_4 \quad (7)$$

with $\alpha_i, i = 1:4$ constant parameters.

To attain the stated goals, a model predictive controller is designed. Its performance is evaluated in Section IV in comparison to the one of a classic PID controller.

1) Model Predictive Control: MPC is an open loop optimal control strategy that minimizes a quadratic cost function over a finite horizon, subject to a dynamic model of the system to be controlled and its constraints. The prediction of the system future behavior allows to compute, at each sampling instant, an optimal control sequence from which only the first element is applied to the system [15].

In this case, the prediction model is represented by the linearized model (4), which has been discretized with the sampling period T_s and extended by an additional state (the previous control action $v_{cm}(k-1)$). The input of the discrete prediction model becomes the control increment $\triangle\tilde{v}_{cm}(k) = \tilde{v}_{cm}(k) - \tilde{v}_{cm}(k-1)$, defined as the control variation between

two successive sampling instants. This formulation is equivalent to adding an integral action that suppresses the steady state error. The state space representation of the prediction model is the following:

$$\begin{cases} \tilde{x}_e(k+1) = A_e\tilde{x}_e(k) + B_{u,e}\triangle\tilde{v}_{cm}(k) + B_{w,e}\tilde{i}_{fc}(k) \\ \tilde{y}(k) = C_e\tilde{x}_e(k) + D_{u,e}\triangle\tilde{v}_{cm}(k) + D_{w,e}\tilde{i}_{fc}(k) \end{cases} \tag{8}$$

with: $A_e = \begin{pmatrix} A_d & B_{u,d} \\ 0 & 1 \end{pmatrix}$; $B_{u,e} = \begin{pmatrix} B_{u,d} \\ 1 \end{pmatrix}$; $B_{w,e} = \begin{pmatrix} B_{w,d} \\ 0 \end{pmatrix}$

$$C_e = \begin{pmatrix} C_d & D_{u,d} \end{pmatrix};\ D_{u,e} = D_{u,d};\ D_{w,e} = D_{w,d}$$

The extended state vector is defined as $\tilde{x}_e(k) = [\tilde{x}(k), \tilde{v}_{cm}(k-1)]'$ and $A_d, B_{*,d}, C_d, D_{*,d}$ matrices are obtained by discretization.

The fixed objectives are formulated by defining the following cost function J to be minimized:

$$J = \sum_{i=1}^{N} \|Q_1\tilde{\lambda}_{O_2}(k+i)\|_2 + \|R_1\triangle\tilde{v}_{cm}(k+i-1)\|_2 \tag{9}$$

where N represents the prediction horizon and Q_1, R_1 are weight matrices.

Using the prediction model (8), the cost function (9) can be rewritten in a compact form:

$$J = 0.5\triangle\tilde{V}_{cm}{}^T(k)H\triangle\tilde{V}_{cm}(k) + \triangle\tilde{V}_{cm}{}^T(k)F \tag{10}$$

with: $H = \Gamma^T\overline{Q}\Gamma + \overline{R}$, $F = \Gamma^T\overline{Q}(\Phi\tilde{x}_e(k) + \Psi\tilde{I}_{fc}(k)$, $\triangle\tilde{V}_{cm}(k) = [\triangle\tilde{v}_{cm}(k), \cdots, \triangle\tilde{v}_{cm}(k+N-1)]'$, $\tilde{I}_{fc}(k) = [\tilde{i}_{fc}(k), \cdots, \tilde{i}_{fc}(k+N-1)]'$, $\overline{Q} = \text{diag}(Q_1, \cdots, Q_1)$, $\overline{R} = \text{diag}(R_1, \cdots, R_1)$.

The optimal control input is computed at each time instant by solving a quadratic programming (QP) optimisation problem, formulated using the cost function (10):

$$\min_{\triangle\tilde{V}_{cm}(k)} J \tag{11}$$

subject to: dynamics (8)

$$\alpha_1\tilde{W}_{cp}(k) + \alpha_2 \leq \tilde{P}_{sm}(k) \leq \alpha_3\tilde{W}_{cp}(k) + \alpha_4$$
$$\tilde{V}_{cm,min} \leq \tilde{V}_{cm}(k) \leq \tilde{V}_{cm,max}$$

where $\tilde{V}_{cm,min}$, $\tilde{V}_{cm,max}$ are column vectors with elements defined as the difference between the minimal/maximal bound of the compressor voltage and its nominal value $V_{cm,0}$.

It can be noticed that the computation of the state-feedback control law $\triangle\tilde{v}_{cm}(k)$ requires the knowledge of the extended state vector. However, the FC system state variables are usually quite difficult to measure (especially the oxygen and nitrogen partial pressures). In order to have access to necessary information, the extended state vector has to be estimated.

2) Observer-based MPC: An observer is required not only for state vector estimation, but also to overcome the diferences between the predicion model and the non-linear model of the FC system in presence of disturbances (i.e. FC current variations generated by load power variations). Indeed, the control variable of the prediction model is the increment $\triangle\tilde{v}_{cm}(k)$, which can be seen like an integral action at the input of the process. Due to state-feedback control, the integral action cannot handle disturbances. This problem is solved by considering a disturbance on the compressor voltage v_{cm} that is actually applied to the procces and that needs to be estimated.

Thus, a state observer is used to estimate the fuel cell extended state vector $\hat{\tilde{x}}_e(k) = [\hat{\tilde{x}}(k), \hat{\tilde{v}}_{cm}(k-1)]'$, by considering the compressor mass flow W_{cp}, the FC voltage v_{fc} and the excess oxigen ratio λ_{O_2} measurable. The observer dynamics is the following:

$$\begin{cases} \hat{\tilde{x}}_e(k+1) = A_e\hat{\tilde{x}}_e(k) + B_{u,e}\triangle\tilde{v}_{cm}(k) + B_{w,e}\tilde{i}_{fc}(k) + \\ \qquad +K(\tilde{y}(k) - \hat{\tilde{y}}(k)) \\ \hat{\tilde{y}}(k) = C_e\hat{\tilde{x}}_e(k) + D_{u,e}\triangle\tilde{v}_{cm}(k) + D_{w,e}\tilde{i}_{fc}(k) \end{cases} \tag{12}$$

where K is the observer gain.

Hence, the MPC strategy uses the estimated extended state vector to compute the control variable v_{cm}.

It should be mentioned that the oxygen ratio cannot be measured in real applications and it also needs to be estimated. So, the choice of measured outputs of the FC system should provide necessary information to estimate the state variables and the oxygen ratio, but also reduce the sensors costs. Thus, an observer based on the compressor velocity, supply manifold pressure and fuel cell voltage measures can be considered.

B. Secondary storage element control

The state of energy is controlled to a reference level SoE_{ref} using the same control strategy (MPC), as it allows to incorporate constraints systematically during the design phase. The SSE state of energy must be bounded to a limited interval $[SoE_{min}, SoE_{max}]$, determined by the SSE sizing. The MPC optimization problem is formulated in a similar way, based on the approach described in Section III-A1. The prediction model is a second order discrete model. After discretizing the linear SSE dynamics (6) (T_s sampling period), the model is increased with the FC current dynamics $\hat{\tilde{i}}_{fc}(k) = \hat{\tilde{i}}_{fc}(k-1) + \Delta\hat{\tilde{i}}_{fc}(k)$ and $\Delta\hat{\tilde{i}}_{fc}(k)$ becomes the new control input. The QP optimization problem to be solved online is formulated in equation (13).

$$\min_{\triangle\tilde{I}_{fc}(k)} \sum_{i=1}^{N} \|Q_2\tilde{SoE}(k+i)\|_2 + \|R_2\triangle\tilde{i}_{fc}(k+i-1)\|_2 \tag{13}$$

subject to: 2nd order discret model

$$\tilde{i}_{fc,min} \leq \tilde{i}_{fc}(k) \leq \tilde{i}_{fc,max}$$
$$\tilde{SoE}_{min} \leq \tilde{SoE}(k) \leq \tilde{SoE}_{max}$$

with: $\triangle\tilde{I}_{fc}(k) = [\triangle\tilde{i}_{fc}(k), \cdots, \triangle\tilde{i}_{fc}(k+N-1)]'$, $\tilde{i}_{fc,*} = i_{fc,*}(k) - I_{fc,0}$ and $\tilde{SoE}_* = SoE_*(k) - SoE_{ref}$. At each time instant, the controller computes the FC current needed to control the SSE energy level using instantaneous values of the power demand $P_{load}(k)$ and FC voltage $v_{fc}(k)$, which are kept constant over the prediction horizon. Once the predicted control sequence $\triangle\tilde{I}_{fc}$ is obtained, the disturbance current $\tilde{I}_{fc}$ defined in eq. (10) is computed and used as information for the observer-based MPC of the FC system.

IV. SIMULATION RESULTS

The control structure is applied to the FC/SSE power system used for electric vehicles. The simulation results are obtained using the non-linear FC model (1). The parameters and constraints of the power system, as well as the operating point chosen for linearization are presented in Table I. The simulations are done with a sampling time T_s of 0.01s and a power demand P_{load} with values between 13 kW and 20 kW (see Fig. 3).

TABLE I
MULTI-SOURCE SYSTEM CONSTRAINTS, PARAMETERS AND NOMINAL VALUES

$i_{fc,max} = 300$ [A]	$\eta_b = 0.95$	$X_{10} = 0.062$ [bar]
$i_{fc,min} = 0$ [A]	$\eta_{rp} = 1$	$X_{20} = 0.76$ [bar]
$v_{cm,max} = 300$ [V]	$\alpha_1 = 1.55 \cdot 10^6$	$X_{30} = 5200$ [rad s^{-1}]
$v_{cm,min} = 0$ [V]	$\alpha_2 = 6.07 \cdot 10^4$	$X_{40} = 1.4$ [bar]
$SoE_{max} = 1$	$\alpha_3 = 5.06 \cdot 10^6$	$I_{fc,0} = 140$ [A]
$SoE_{min} = 0.25$	$\alpha_4 = -10^4$	$V_{cm,0} = 94$ [V]
$E_{sse,max} = 350$ [kJ]		$V_{fc,0} = 120$ [V]

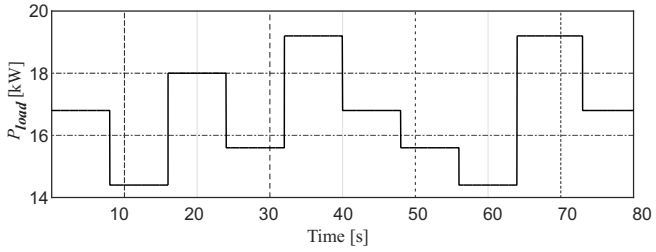

Fig. 3. Power demand.

The observer-based MPC parameters used for oxygen ratio control are : the prediction horizon $N = 100$ and the weight matrices $Q_1 = 1000$ and $R_1 = 0.01$. The observer gain K was determined using the pole placement method.

The predictive controller of the FC system is compared to a PID controller in order to highlight the advantages of the proposed control strategy. The classic controller handles the compressor voltage v_{cm} constraints using a saturation. Thus, the PID controller, given by the transfer function $H_{PID} = k(1 + \frac{1}{\tau_i s} + \tau_d s)$, is implemented with an anti-windup scheme to avoid integrating the tracking error when the control input is saturated. The controller parameters are chosen as: $k = 30$, $\tau_i = 0.067$s, $\tau_d = 0.017$s and the anti-windup is regulated by tuning the time constant τ_t associated. In this application, the value of τ_t is 0.014s.

Fig. 4 and Fig. 5 show the excess oxygen ratio and compressor output voltage obtained in simulation using both controllers. The desired value $\lambda_{O_2} = 2$, which maximizes the net power supplied by the fuel cell, is maintained. A time response of 4s and a maximum 20% overshoot are observed when applying the observer-based controller MPC 1. Moreover, the compressor operates within the nominal region defined by the surge and choke lines, as illustrated in Fig. 6. Fig. 7 shows that these constraints cannot be respected with a PID controller.

The second controller (MPC 2) is designed to control the SSE state of energy to a desired value of 75% of the maximum capacity using the weight matrices $Q_2 = 100$ and $R_2 = 1$.

The SSE state of energy (SoE) and the FC current evolution are illustrated in Fig. 8 and Fig. 9 respectively, applying either MPC 1 either PID controller to regulate the oxygen ratio in the fuel cell system. The control of SoE is realized with an overshoot of less than 1% and a time response of 4s. For the chosen power load profile, the computed fuel cell current varies between 100A and 220A.

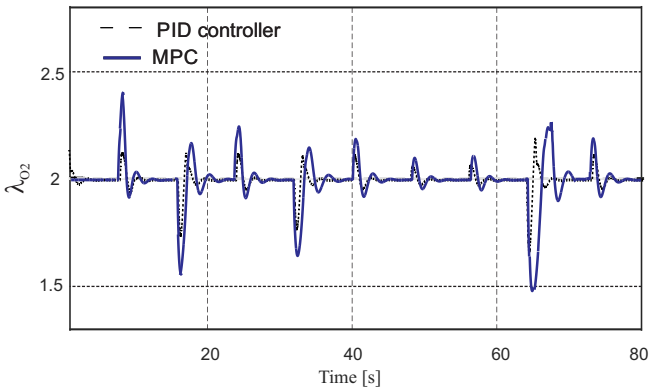

Fig. 4. Oxygen ratio λ_{O_2}: MPC (solid line), PID (dashed line).

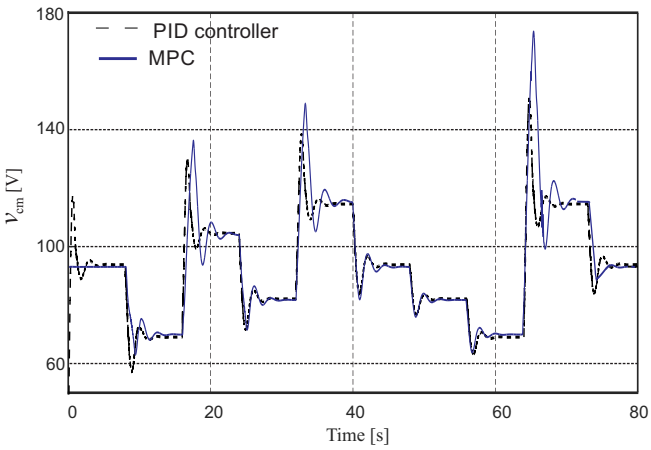

Fig. 5. Compressor voltage v_{cm}: MPC (solid line), PID (dashed line).

V. CONCLUSIONS

A decentralized control structure is considered to increase the efficiency of the FC/SSE power system while maintaining a desired level of charge for the additional power source. This particular control structure, allows to control the level of charge of the SSE and the FC system separately. In this way, both optimization problems can be solved simultaneously, reducing the computational load compared to a centralized approach that requires to solve a more complex optimization problem. The dedicated control maximizes the FC system efficiency by keeping the excess oxygen ratio to its optimal value and assures the compressor operating within its nominal

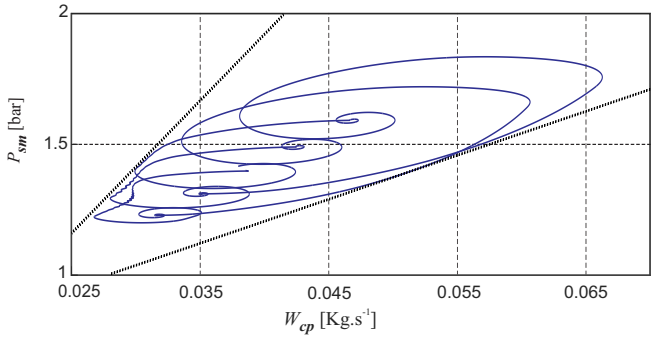

Fig. 6. MPC: compressor pressure and mass flow evolution (solid line), compressor operating zone (dashed line).

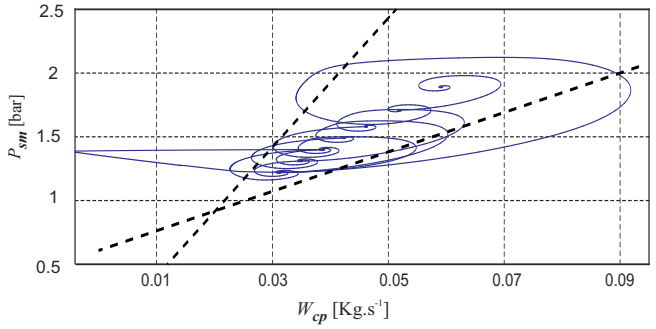

Fig. 7. PID: compressor pressure and mass flow evolution (solid line), compressor operating zone (dashed line).

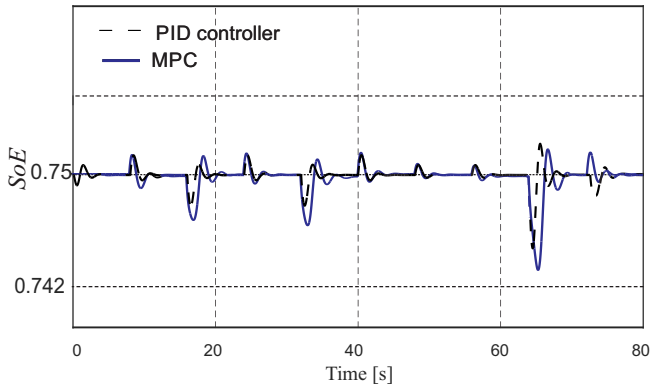

Fig. 8. SSE state of energy (SoE): MPC (solid line), PID (dashed line).

region, which reduces the power losses. Simulations run on the non-linear model of the FC system show the benefits of the model predictive approach compared to PID control.

Nevertheless, the application of the proposed control is limited to power load profiles with bounded variations around the nominal value used for the FC model linearization, since the performances of the MPC strategy rely on the prediction model accuracy. In order to account for the non-linear behavior of the FC system, a linear time-varying (LTV) model can be developed by successive linearization along a desired trajectory, generated over the prediction horizon at each sampling step. Thus, the control strategy can be improved by using a LTV prediction model.

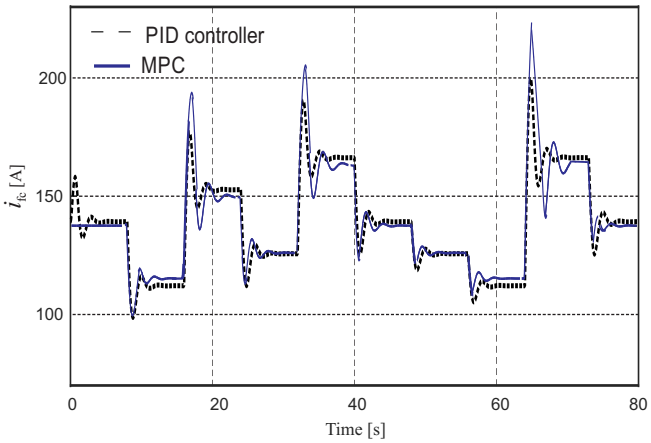

Fig. 9. Fuel cell current i_{fc}: MPC (solid line), PID (dashed line).

Another perspective of this work would be to consider the explicit minimization of the hydrogen consumption among the control objectives and to validate the improved control approach on a relevant driving cycle. In

References

[1] P. García, J. P. Torreglosa, L. M. Fernández, and F. Jurado. Control strategies for high-power electric vehicles powered by hydrogen fuel cell, battery and supercapacitor. *Expert Systems with Applications*, 40:4791–4804, 2013.

[2] K. W. Suh. *Modeling, Analysis and Control of Fuel Cell Hybrid Power Systems*. PhD thesis, University of Michigan, Ann Arbor, Michigan, 2006.

[3] A. G. Stefanopoulou J. T. Pukrushpan, H. Peng. Control-oriented modeling and analysis for automotive fuel cell systems. *Journal of Dynamic Systems, Measurement, and Control*, 2004.

[4] J. T. Pukrushpan. *Modeling and control of fuel cell systems and fuel processors*. PhD thesis, University of Michigan, 2003.

[5] L.T. Pukrushpan, H. Peng, and A. G. Stefanopoulou. Control-oriented modeling and analysis for automotive fuel cell systems. *Transactions of the ASME*, 126:14–25, 2004.

[6] A. Vahidi, I. Kolmanovsky, and A. Stefanopoulou. Constraint handling in a fuel cell system: A fast reference governor approach. *IEEE Transactions on Control Systems Technology*, 15:86 – 98, 2007.

[7] R. Talj, R. Ortega, and M. Hilairet. Control of the air supply system of a pem fuel cell with guaranteed stability properties. *International Journal of Control*, 82(9):1706–1719, 2009.

[8] A. Vahidi, A. Stefanopoulou, and H. Peng. Current management in a hybrid fuel cell power system: A model-predictive control approach. *Control Systems Technology*, 14:1047 – 1057, 2006.

[9] A.Vahidi and W. Greenwell. A decentralized model predictive control approach to power management of a fuel cell-ultracapacitor hybrid. In *American Control Conference*, 2007.

[10] L. Johannesson and B. Egardt. Approximate dynamic programming applied to parallel hybrid powertrains. In *IFAC*, 2008.

[11] I. E. Aiteur, C. Vlad, and E. Godoy. Optimization-based energy management strategies for electric vehicles. In *IECON*, 2015.

[12] I. E. Aiteur, C. Vlad, and E. Godoy. Energy management and control of a fuel cell/supercapacitor multi-source system for electric vehicles. In *ICSTCC*, 2015.

[13] M. Cacciato, F. Caricchi, F. Capponi, and E. Santini. A critical evaluation and design of bi-directional dc/dc converters for super-capacitors interfacing in fuel cell applications. In *Industry Applications Conference*, 2004.

[14] W. Greenwell A. Vahidi. A decentralized model predictive control approach to power management of a fuel cell-ultracapacitor hybrid. In *Proceedings of the American Control Conference*, 2007.

[15] M. V. Kothare, V. Balakrishnan, and M. Morari. Robust constrained model predictive control using linear matrix inequalities. *Automatica*, 32:1361–1379, 1996.