HAL
open science

Reducing process cost and CO2 emissions for extractive distillation by double-effect heat integration and mechanical heat pump

Xinqiang You, Ivonne Rodriguez-Donis, Vincent Gerbaud

To cite this version:

Xinqiang You, Ivonne Rodriguez-Donis, Vincent Gerbaud. Reducing process cost and CO2 emissions for extractive distillation by double-effect heat integration and mechanical heat pump. Applied Energy, 2016, 166, pp.128-140. 10.1016/j.apenergy.2016.01.028 . hal-01339941

HAL Id: hal-01339941

https://hal.science/hal-01339941v1

Submitted on 12 Jul 2016

HAL is a multi-disciplinary open access archive for the deposit and dissemination of scientific research documents, whether they are published or not. The documents may come from teaching and research institutions in France or abroad, or from public or private research centers.

L'archive ouverte pluridisciplinaire **HAL**, est destinée au dépôt et à la diffusion de documents scientifiques de niveau recherche, publiés ou non, émanant des établissements d'enseignement et de recherche français ou étrangers, des laboratoires publics ou privés.

Open Archive TOULOUSE Archive Ouverte (OATAO)
OATAO is an open access repository that collects the work of Toulouse researchers and makes it freely available over the web where possible.

This is an author-deposited version published in : http://oatao.univ-toulouse.fr/
Eprints ID : 15863

To link to this article : DOI : 10.1016/j.apenergy.2016.01.028
URL : http://dx.doi.org/10.1016/j.apenergy.2016.01.028

To cite this version : You, Xinqiang and Rodriguez-Donis, Ivonne and Gerbaud, Vincent *Reducing process cost and CO2 emissions for extractive distillation by double-effect heat integration and mechanical heat pump*. (2016) Applied Energy, vol. 166. pp. 128-140. ISSN 0306-2619

Any correspondence concerning this service should be sent to the repository administrator: staff-oatao@listes-diff.inp-toulouse.fr

http://dx.doi.org/10.1016/j.apenergy.2016.01.028

Reducing process cost and CO_2 emissions for extractive distillation by double-effect heat integration and mechanical heat pump

Xinqiang You, Ivonne Rodriguez-Donis, Vincent Gerbaud *

Université de Toulouse, INP, UPS, LGC (Laboratoire de Génie Chimique), 4 allée Emile Monso, F-31432 Toulouse Cedex 04, France
CNRS, LGC (Laboratoire de Génie Chimique), F-31432 Toulouse Cedex 04, France

HIGHLIGHTS

- We study heat integration and mechanical heat pump processes for the extractive distillation.
- We propose a new objective function for optimizing heat integrated extractive distillation processes.
- We propose a novel partial heat integration process and two partial mechanical heat pump processes.
- The proposed optimal partial HI process gives the lowest TAC and the full BF process produces the lowest CO_2 emissions.
- The novel mechanical heat pump processes can effectively reduce initial investments and total annual cost.

Keywords:
Extractive distillation
Acetone–methanol–water
Heat integration
Heat pump
CO_2 emissions
Double-effect

ABSTRACT

Double-effect heat integration and mechanical heat pump technique are investigated for the extractive distillation process of the acetone–methanol minimum boiling azeotropic mixture with entrainer water and compared from the economical view by the total annual cost (TAC) and environmental aspect by CO_2 emissions. Firstly, A novel optimal partial heat integration (OPHI) process is proposed and optimized through the minimization of a newly defined objective function called OF2 that describes the energy consumption used per product unit flow rate and allows comparison with the literature direct partial and full heat integration processes. We find that the minimum TAC is not achieved by the full heat integration process as intuition, but by the new OPHI process. Secondly, the vapour recompression (VRC) and bottom flash (BF) mechanical heat pump processes are evaluated with respect to energy and CO_2 emissions. We proposed a new partial VRC and a new partial BF process in order to reduce the high initial capital cost of compressors. Overall the results show that compared to the conventional extractive distillation process the proposed OPHI process gives a 32.2% reduction in energy cost and a 24.4% saving in TAC while the full BF process has the best performance in environmental aspect (CO_2 emissions reduce by 7.3 times).

1. Introduction

Distillation is a leading separation technology in chemical industry but it is also very energy-intensive [1]. Therefore, developing alternative processes is interesting with the sake of reducing the excessive energy (causing pollutants and global warming gases) and the waste (e.g., waste forming in the column itself) [2]. The evaluation of the environmental impacts is the key reasons that drive the cleaner technologies which may seem not attractive but are strongly competitive in an overall scenario [3].

For the common azeotropic mixtures special distillation processes are required such as extractive distillation, which is the most applied method in industry together with azeotropic distillation [4]. Thermodynamic insight for extractive distillation allows one to assess which component will be withdrawn as product, what the adequate column configuration is, and whether or not it exists limiting operating parameter in both batch [5,6] and continuous modes [7,8].

In literature and industry, two approaches are commonly used to improve the energy efficiency and reduce the total annual cost (TAC) of distillation process: double-effect heat integration (DEHI see Fig. 1) and heat pumps technology although they have drawback of high investment cost [9].

Firstly, regarding DEHI, literature results are equivoque in terms of TAC savings while the energy savings are evident compared with

* Corresponding author at: Université de Toulouse, INP, UPS, LGC (Laboratoire de Génie Chimique), 4 allée Emile Monso, F-31432 Toulouse Cedex 04, France.
E-mail address: vincent.gerbaud@ensiacet.fr (V. Gerbaud).

Nomenclature

A_C	condenser heat transfer area [m^2]
A_R	reboiler heat transfer area [m^2]
BF	bottom flash (heat pump)
COP	coefficient of performance (heat pump process)
COP_c	the critical (upper) theoretical value of COP
$Cost_{cap}$	capital cost [10^6 \$]
$Cost_{ope}$	operating cost [10^6 \$]
$Cost_{CA}$	column annual cost [10^6 \$]
$Cost_{HA}$	cost of heater for cooling recycling entrainer [10^6 \$]
D	distillate flow [kmol/h]
$D1$	distillate flow of extractive column
$D2$	distillate flow of regeneration column
Diameter	diameter of column
DPHI	direct partial heat integration
E	entrainer
ED	extractive distillation
F	feed flow rate [kmol/h]
F_{AB}	original azeotropic mixtures feed flow rate [kmol/h]
F_E	entrainer feed flow rate [kmol/h]
F_E/F	feed ratio, continuous process
$Fuel_{factor}$	the fuel factor, reflecting the types of the fuels
h_{proc}	the enthalpy of steam delivered to the process [kJ/kg]
Height	height of column
I_{cs}	column shell investment cost [10^6 \$]
I_{HE}	heat exchanger investment cost [10^6 \$]
k	product price factor for A vs B
m	energy price difference factor for condenser vs reboiler
MHP	mechanical heat pump
N	number of theoretical stages
N_E	number of theoretical stages of extractive column
N_{FE}	entrainer feed stages
N_{FF}	original mixture feed stages
NHV	the net heating value of a fuel with a carbon content [kJ/kg]
N_R	number of theoretical stages of regeneration column
OF	objective function (the energy consumption per product flow rate)
OPC_1	outlet pressure of compressor for extractive column [atm]
OPC_2	outlet pressure of compressor for regeneration column [atm]
OPHI	optimal partial heat integration
OFHI	optimal full heat integration
OPT_1	outlet pressures of throttle for extractive column [atm]
OPT_2	outlet pressures of throttle for regeneration column [atm]
p	pressure [Hg mm] [atm]
Q_{c1}	condenser heat duty of extractive column [MW]
Q_{c1}	condenser heat duty of regeneration column [MW]
Q_{fuel}	the amount of fuel burnt [MW]
Q_{HA}	heat duty of heater for cooling recycling entrainer [MW]
Q_{r1}	reboiler heat duty of extractive column [MW]
Q_{r2}	reboiler heat duty of regeneration column [MW]
R	reflux ratio
SQP	sequential quadratic programming
T	temperature [K]
T_C	top temperature of column [K]
T_D	temperature difference [K]
T_{FTB}	the flame temperature [°C]
T_R	bottom temperature of column [K]
T_0	the ambient temperature [°C]
T_{stack}	the stack temperature [°C]
TAC	total annual cost
V	vapour flows [kmol h^{-1}]
VRC	vapour recompression
W	bottom product flow rate [mol/h]
x_D	distillate fraction
x_i	liquid mole fraction of component i
x_F	original mixture liquid mole fraction
x_E	entrainer liquid mole fraction

Greek letters

α	the molar masses content of carbon in CO_2
α_{ij}	volatility of component i relative to component j
γ_i	activity coefficient of component i
λ_{proc}	the latent heat of steam delivered to the process [kJ/kg]
τ	binary interaction parameter in NRTL model
η	the Carnot efficiency

conventional extractive distillation (CED). Gutierrez-Guerra et al. [10] showed that thermally coupled extractive distillation can achieve significant reductions of CO_2 emissions due to the energy savings. For the extractive distillation of the acetone–methanol minimum boiling azeotropic mixture with entrainer water, Knapp and Doherty [11] found that the DEHI process decreased the energy cost by 40% but found little decrease in TAC whereas Luyben [12] noted a 20.5% reduction in TAC. However, we showed that Luyben's CED design could be further optimized with a 17% savings in energy [13]. For ethanol dehydration, the DEHI process reduced the utility demand by 15% [14], but the increase in a DEHI equipment cost may overcome the reduction of the utility cost and lead to a less profitable process than a CED process [15]. Similarly, DEHI extractive distillation for the separation of Diisopropyl ether and isopropyl alcohol increases the TAC instead of decreasing it [16] compared with CED. Therefore, benefits of DEHI process in terms of TAC remain debatable.

Besides, all DEHI processes mentioned above are direct partial integration processes. In this study, we discuss whether a further optimization of other variables would decrease the TAC; whether full DEHI behaves similarly and whether there is an optimal heat duty to be integrated? What is the influence of the TAC payback period?

Secondly, mechanical heat pump technologies like vapour compression (VC) and vapour recompression (VRC) and bottom flash (BF) shown in Fig. 2 [17] are useful way to improve energy quality and reduce the greenhouse emissions in spite of disadvantages like high investment cost and process complexity.

In VC, a working fluid absorbs the heat from condenser and gives it off to the reboiler. In VRC, the working fluid is the top vapour flow. It is directly compressed and condensed in the reboiler after reducing pressure by valve, and then it is partially refluxed to the column top while the other part is taken out as distillate. In order to balance the heat input mainly generated by the compressor, a small condenser is needed. The advantage of VRC over VC is that a smaller condenser heat transfer area and a lower temperature lift are used because the heat is exchanged only once. Modla and Lang [18] showed that the use of an external heat exchanger in VRC batch distillation reduced a lot the payback times. Alternatively, in the bottom flash heat pump (BF) [19], the bottom liquid is cooled down by expansion over a throttle valve to a temperature below that of the condenser. Then, it is evaporated at the

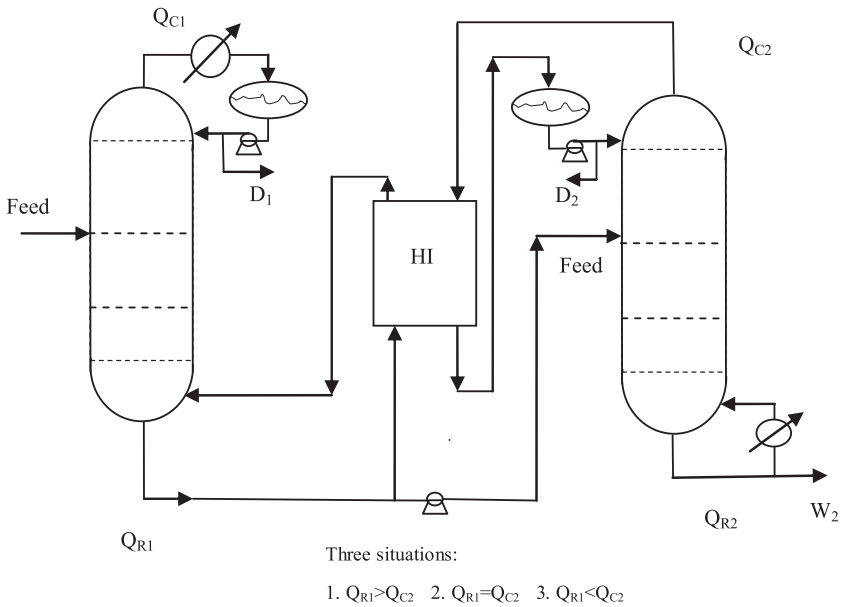

Fig. 1. Sketch for extractive distillation heat integration process.

condenser to cool down the top vapour and then compressed to reenter the column as bottom vapour flow.

In mechanical heat pumps, several studies [19–22] show that VRC process seems to have better performance in economical view over the VC and BF processes but it depends on the electricity price [23] and on the temperature lift [24]. However, there is no unanimous thermodynamic reason to prefer VRC process [25]. Useful selection schemes [26] and performance maps [27] for a preliminary choice of different heat pump technologies must be supplemented by comparison of each process simulation. Besides, all the mentioned heat pump processes are usually used for low overall column temperature [28] difference whereas in extractive distillation process, relatively high temperature differences exist between the extractive and regeneration columns.

In this study, Section 2 presents the methods for assessing the performance of the processes, Section 3 is devoted to study DEHI processes for extractive distillation and Section 4 to VRC and BF mechanical heat pump processes. We consider the extractive distillation of the acetone – methanol azeotrope with water which process without integration we have recently optimized and to which we can compare. We propose for the first time an optimization methodology with an objective function that allows to compare in Section 3 all DEHI processes, including a new optimized partial heat integration process optimizing the heat amount integrated. In Section 4, we study a new mechanical heat pump sequences that take advantage of the small temperature differences between the bottom of the extractive column and the top of the regeneration column and in which we perform the heat integration between both columns. Since the top vapour components of the two columns are compressed, the VC heat pump will not be considered due to additional heat exchanger capital cost compared with the VRC heat pump process.

2. Evaluation method of heat pump performance and CO_2 emissions

2.1. Heat pump performance

Bruinsma and Spoelstra [17] gave a detail derivation of the coefficient of performance (COP) in order to evaluate the heat pump technique in distillation process. For heating application, it is the ratio of the heat rejected at high temperature to the work input:

$$\mathrm{COP} = \frac{Q_h}{W} \tag{1}$$

The upper theoretical value of COP obtainable in a heat pump is $\mathrm{COP_c}$, related to the Carnot cycle:

$$\mathrm{COP_C} = \frac{T_h}{T_h - T_c} \tag{2}$$

where the temperature lift ($T_h - T_c$) is the sum of the temperature difference over the column and the temperature difference over the heat exchanger.

Plesu et al. [29] provide an easy way to check whether or not the use of a heat pump can provide a more sustainable distillation process decreasing its energy requirements in the early stages of design. The simplified equation is as follow:

$$\mathrm{COP_S} = \frac{Q}{W} = \frac{T_C}{T_R - T_C} \tag{3}$$

where Q is the reboiler duty of column, W the work provided, T_R and T_C temperature (K) of reboiler and condenser. They also pointed out that when the Q/W ratio exceeds 10, a heat pump is clearly recommended, between 5 and 10 it should be evaluated more detail, and if it is lower than 5, using a heat pump should not bring any benefits.

2.2. Evaluation of CO_2 emissions for distillation column

Evaluation of CO_2 emissions for distillation column with heat pump process is a complex issue because the steam used for reboiler could be generated from the traditional energy resources such as coal, heavy fuel oil, nature gas, and the compressor for heat pump could be steam turbine driving or electricity driving. Further, the electricity could be generated by traditional energy resources or new energy resources like wind, solar, biological energy. In this study, heavy fuel oil is assumed for the steam used in reboiler, and a given CO_2 emissions value for the electric compressor.

In 1991, Smith and Delaby [30] have related energy targets to the resulting flue gas emissions from the utility system for a given process with fixed process conditions by considering the typical process industry utility devices such as boilers, furnaces and

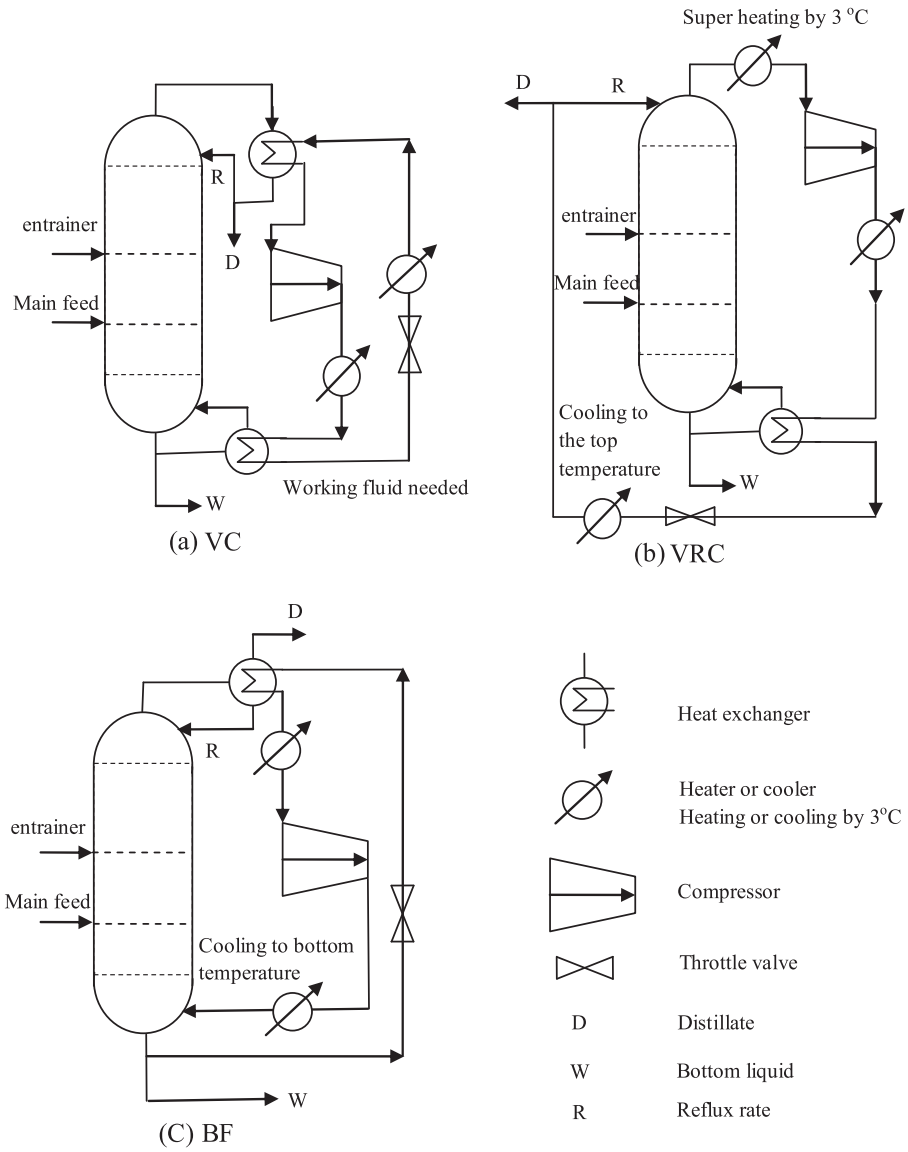

Fig. 2. Mechanical heat pump flow sheet for extractive distillation columns (a) vapour compression (VC) and (b) vapour recompression (VRC), (c) bottom flash (BF).

turbines; the emitting gas being CO_2, SO_2 and NO_2. Based on their works, Gadalla et al. [31] proposed a simple model for the calculation of CO_2 emissions for heat-integrated distillation system. The model for calculating CO_2 emissions is as follow, based on the assumption that no carbon monoxide is formed during combustion since the air is regarded as in excess.

$$[CO_2]_{emiss} = Q_{fuel} \cdot Fuel_{factor} \tag{4}$$

where Q_{fuel} is the amount of fuel burnt, reflecting the heating device and $Fuel_{factor}$ is the fuel factor, reflecting the types of the fuel. It is defined as follow:

$$Fuel_{factor} = \left(\frac{\alpha}{NHV}\right) \cdot \left(\frac{C\%}{100}\right) \tag{5}$$

where α (=3.67) is the molar masses content of carbon in CO_2, NHV (kJ/kg) means the net heating value of a fuel with a carbon content of C%. $Fuel_{factor}$ takes the effect of the fuel on the process in terms of C%, NHV and α. In this study, assume heavy fuel oil is used and NHV = 39771 kJ/kg, C% = 86.5% [31].

In distillation system, steam is used for heating in reboiler. The steam is produced by a boiler from the combustion of fuel. The theoretical flame temperature and the stack temperature are assumed as 1800 °C and 160 °C. So Q_{Fuel} can be calculated from following equation:

$$Q_{fuel} = \frac{Q_{proc}}{\lambda_{proc}} \cdot (h_{proc} - 419) \cdot \frac{T_{FTB} - T_0}{T_{FTB} - T_{stack}} \tag{6}$$

where λ_{proc} (kJ/kg) and h_{proc} (kJ/kg) are the latent heat and enthalpy of steam delivered to the process, respectively, while T_{FTB} (°C), T_{stack} (°C) and T_0 (°C) are the flame temperature, the stack temperature and the ambient temperature. The boiler feed water is assumed to be at 100 °C with an enthalpy of 419 kJ/kg [31]. The above equation is obtained from a simple steam balance around the boiler to relate the amount of fuel necessary in the boiler to provide a heat duty of Q_{proc}. After calculating the CO_2 emissions of steam in reboiler (heavy fuel oil) are 89.6 kg/GJ, the value agrees with the study of Gutiérrez-Guerra et al. [10]. The CO_2 emissions for the electricity power of a compressor is taken as 51.1 kg CO_2/GJ [32], that is 184 kg CO_2/h for 1000 kW power which we use in this study.

2.3. Economic assessment

The total annualized cost TAC is used for the comparison of the different designs. TAC includes capital cost per year and operating costs and is computed from the following formula:

$$\mathrm{TAC} = \frac{\text{capital cost}}{\text{payback period}} + \text{operating cost} \tag{7}$$

The payback period is considered as 3 years in the base case, and is later changed. Douglas' cost formulas are used [33] with Marshall and Swift (M&S) inflation 2011 index = 1518.1 [34]. The energy cost of the reboiler is 3.8$ per GJ, after consulting a chemical company in Chongqing China. The price of electricity is assumed the same as the one used for the column reboiler duty. The operating cost means the energy cost in reboiler and condenser, and more detail information is found in our previous works [13,35]. To emphasize the effect of the entrainer flow rate recycle on the process, the heat exchanger annual cost for cooling recycling entrainer is taken into account. Other costs such as pumps, pipes, valves are neglected at the conceptual design tray that we consider. The price of electricity is the same as that of the one used for the column reboiler duty based on the region of Chongqing in China.

3. Extractive distillation with double-effect heat integration

Our basic case design used for comparison is shown in Fig. 3. It is an extractive distillation process optimized in our previous works by focusing on the energy saving of the process itself for the separation of the minimum azeotropic mixture acetone–methanol with heavy entrainer water [36]. That typical 1.0-1a class extractive separation [37] is favored in energy cost at low operating pressure of the extractive column and the $P = 0.6$ atm is chosen in order to use cooling water for the condenser [13].

The bottom temperature of extractive column is 348.3 K at 0.6 atm and the condenser temperature of entrainer regeneration column is 337.7 K at 1 atm. The heat integration is therefore impossible as there is no temperature difference. Hence, the operating pressure of regeneration column P_2 is adjusted to a suitable pressure to give a heat integration feasible condenser temperature.

Aiming at optimizing the two columns together, we proposed the objective function OF for extractive distillation process in our work [37] Based on OF, OF2 is used for the DEHI extractive distillation process and it is as follow:

$$\begin{aligned} &\min && \mathrm{OF2} = \frac{(Q_{r1} - Q_{c2}) + Q_{r2} + m \cdot Q_{c1}}{k \cdot D_1 + D_2} \\ &\text{Subject to :} && x_{\text{acetone},D1} \geqslant 0.995 \\ &&& x_{\text{acetone},W1} \leqslant 0.001 \\ &&& x_{\text{methanol},D2} \geqslant 0.995 \\ &&& x_{\text{water},W2} \geqslant 0.9999 \end{aligned} \tag{8}$$

The meanings of the variables are shown in Fig. 3. Factors k and m respectively describe the price differences between acetone and methanol products and between the condenser cooling and reboiler heat duties respectively: $k = 3.9$ (product price index), $m = 0.036$ (energy price index). The meaning of OF2 is the energy consumption used per product unit flow rate (kJ/kmol). In OF2, the direct partial and full heat integration could be regarded as the extremely conditions where (Q_{r1}–Q_{c2}) taking the maximal value and the minimal value zero, respectively.

3.1. Direct partial heat integration

Direct partial heat integration (DPHI) of extractive distillation means that the design variables of extractive column are taken from Fig. 3, just adjusting the operating pressure of the regeneration column from 1 atm to P_2 atm and increasing R_2 to make methanol product satisfy the purity specification. The reboiler/condenser heat exchanger is sized by using an overall heat transfer coefficient of 0.00306 GJ h^{-1} m^{-2} K^{-1} [38]. The effect of P_2 on the process TAC and OF2 of DPHI is shown in Fig. 4 and Table 1 shows the TAC, OF and temperature difference (TD) of the reboiler/condenser heat exchanger (see Fig. 2).

From Fig. 4 and Table 1, we know that (1) when heat integration is taken into account, both TAC and energy cost per unit product flow rate OF2 decrease drastically, up to more than 15% and 30%, respectively. It shows the strong interest to consider heat integration of the process. (2) OF2 increases linearly following the increase of P_2. This is because the separation of methanol and water in regeneration column becomes more and more difficult as shown in Fig. 5, the relative volatility of methanol-water at different pressure. (3) TAC firstly decreases quickly and then increases when P_2 increases. For the reboiler/condenser heat exchanger, the heat transfer area decreases quickly as the temperature difference increase from its small value, leading to the

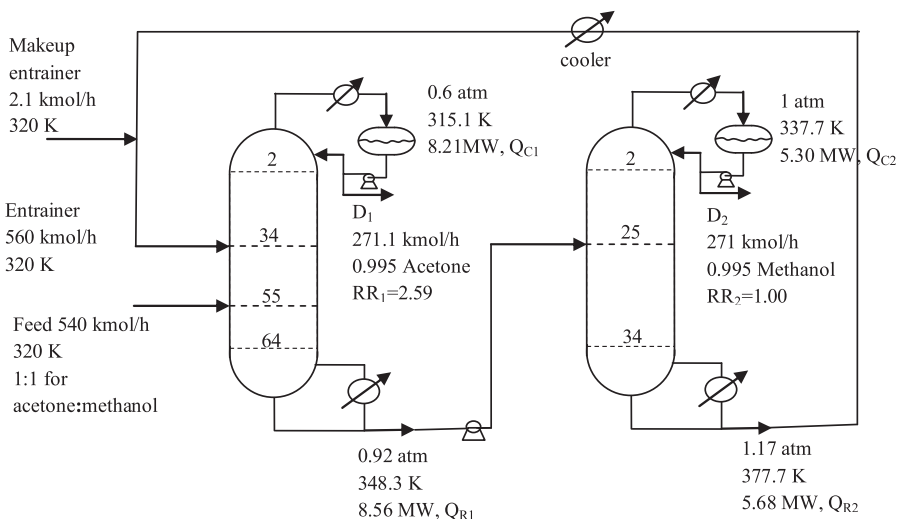

Fig. 3. Extractive distillation of acetone–methanol with water, base case.

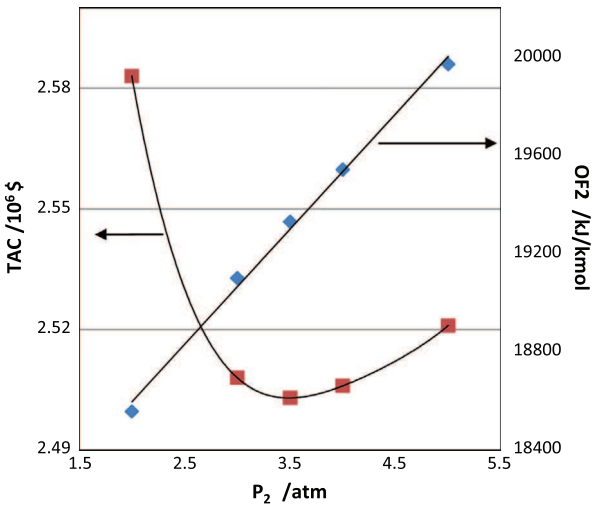

Fig. 4. Effect of regeneration column pressure P_2 on TAC and OF2, the performance of the DPHI.

Table 1
Temperature difference, OF and TAC of the reboiler/condenser heat exchanger following P_2.

P_2/atm	1 (base case)	2	3	3.5	4	5
TD/K	−10.6	8.1	20.2	25.1	29.4	36.8
OF2/kJ/kmol	28326.3	18556.2	19100.1	19329.4	19541.9	19970.2
TAC/10^6 $	3.107	2.583	2.508	2.503	2.506	2.521

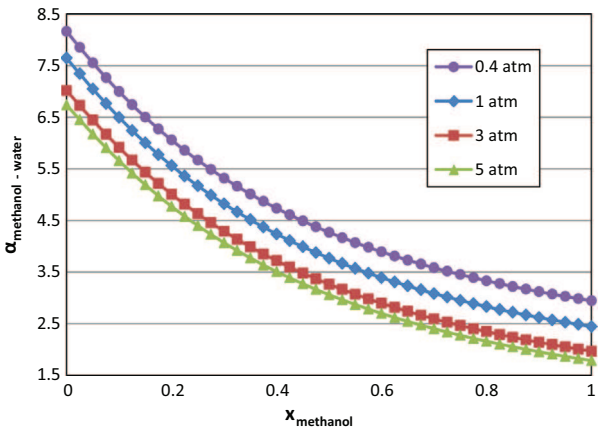

Fig. 5. Relative volatility of methanol over water at different pressures.

decrease of its capital cost and the TAC of the whole process. When TD is high enough (29 K for P_2 = 4 atm), the benefit of the increase of TD on the process is lessened, meanwhile, the cost penalty in the regeneration column caused by the increase of operating pressure becomes more obvious and overcomes the benefit from the heat exchanger smaller. (4) As the value with minimal TAC, P_2 = 3.5 atm is used hereafter which will give the reductions of TAC and OF2 by 19.4% and 31.8%. The heat exchanger duty for heat integration is 6.04 MW and the corresponding heat transfer area is 283 m^2. (5) The differential temperature driving force is 25.1 K. The results agree with the fact that the reasonable differential temperature driving force is more than 20 K [38].

Based on the feasibility and univolatility analysis that led us to select P_1 = 0.6 atm [13,35], the choice of a lower pressure allows us to choose P_2 = 3.5 atm instead of P_2 = 5 atm as used in Luyben's heat integrated design for the separation systems, our design with P_1 = 0.6 atm and P_2 = 3.5 atm results in 16% TAC saving and 27.6% OF2 (energy cost) saving compared to Luyben's heat integrated design with P_1 = 0.6 atm and P_2 = 3.5 atm.

Fig. 5 shows that following the increase of the pressure, the volatility of methanol over water decreases. That means that more energy is needed for their separation in the regeneration column. This suggests that it is better to keep the pressure in the regeneration column as low as possible from the separation point of view.

3.2. Optimal partial heat integration

Optimal partial heat integration (OPHI) of extractive column means all the design variables are being optimized with objective function OF2 after the operating pressure of regeneration column is changed to 3.5 atm from above results.

The two-step optimization procedure [13] for extractive distillation is used since we keep fixing the two columns stage number as base case. The results after recheck in closed loop flow sheet are shown as OPHI in Tables 2 and 3. There is a small decrease of OF2 when more variables are taken into account. The optimal values of F_E, R_1, D_1 D_2, N_{FE} and N_{FF} are almost similar to the DPHI case. Differences are seen in the R_2 and N_{FR} values. Indeed, the new regeneration column design leads to a more suitable heat exchange duty for heat integration and reduces the operating cost and the capital cost, giving rise to the drops of TAC by 6%.

3.3. Optimal full heat integration

In optimal full heat integration of extractive distillation (OFHI), the reboiler heat duty of extractive column equals to the condenser heat duty of regeneration column. The process is achieved in Aspen Plus by using *design specification* with the $Q_{r1} - Q_{c2} = 0$ as specification and the reflux ratio of regeneration column R_2 as variable. In order to do a fair comparison, the variable of F_E, R_1, R_2 (keep $Q_{r1} - Q_{c2} = 0$), D_1, D_2, N_{FE}, N_{FF}, and N_{FREG} are also optimized by two step optimization procedure [13]. After recheck in closed loop flow sheet, the design parameters and the cost data of three DEHI extractive distillation processes are shown in Tables 2 and 3.

From Tables 2 and 3, we know that (1) comparing heat integration process with no heat integration base case, TAC and energy cost for per unit product decreases by 31.8% and 19.4% respectively. (2) A counter-intuitive result is obtained: compared with direct partial heat integration, optimal full heat integration is not recommended because it gives a little increase in TAC although the energy cost decreases a little. The reason is that in order to achieve full heat integration, R_2 increases a lot to make the condenser duty in regeneration column match the reboiler duty in extractive column, leading to the increase of heat exchanger area and the capital cost that overcome the operating cost reduction

Table 2
Design parameters of three double-effect heat integration extractive distillation processes, acetone–methanol with water.

	Case DPHI	Case OPHI	Case OFHI
N_E	65	65	65
N_R	35	35	35
P_1/atm	0.6	0.6	0.6
P_2/atm	3.5	3.5	3.5
F/kmol/h	540	540	540
F_E/kmol/h	560	552	574.3
R_1	2.59	2.56	2.53
R_2	1.46	1.78	2.44
D_1/kmol/h	271.1	270.9	270.7
D_1/kmol/h	271.0	271.1	271.1
N_{FE}	34	35	36
N_{FF}	55	56	55
N_{FR}	25	19	20

Table 3
Sizing parameters and cost data of three double-effect heat integration extractive distillation processes, acetone–methanol with water.

Column	Case DPHI		Case OPHI		Case OFHI	
	C_1	C_2	C_1	C_2	C_1	C_2
Diameter/m	2.796	1.335	2.782	1.425	2.769	1.596
Height/m	45.72	23.78	45.72	23.78	45.72	23.78
$I_{CS}/10^6$ \$	1.446	0.389	1.439	0.417	1.431	0.471
Q_C	8.21	0	8.14	0	8.06	0
Q_R	2.52	7.23	1.66	8.00	0	9.67
A_R/m^2	128	366	84	345	0	490
A_C/m^2	861	0	854	0	845	0
$I_{HE}/10^6$ \$	0.976	0.435	0.920	0.418	0.749	0.525
$Cost_{cap}/10^6$ \$	2.742	0.877	2.676	0.894	2.495	0.996
$Cost_{ope}/10^6$ \$	0.323	0.829	0.224	0.782	0.034	1.109
$Cost_{CA}/10^6$ \$	1.237	1.122	1.116	1.080	0.865	1.464
Q_H/MW	1.18		1.16		1.22	
$Cost_{HA}/10^6$ \$	0.021		0.021		0.022	
Q_{HE}/MW	6.04		6.82		8.42	
A_{HE}/m^2	284		318		395	
$Cost_{HE}/10^6$ \$	0.123		0.132		0.153	
TAC/10^6 \$	2.503		2.349		2.504	
CO_2 emissions/kg/h	3146.2		3117.2		3120.4	
OF2/KJ/kmol	19329.4		19162.8		19178.4	

in the extractive column. Besides, as R_2 goes up, so does the reboiler duty of regeneration column Q_{R2} and the operating cost accordingly. (3) The optimal partial heat integration proposed in this study remains competitive because it gives a 6.2% reduction in TAC compared with direct partial or optimal full heat integration, and also a little decrease in energy cost following OF2. It demonstrates that there exists an optimal heat duty to be integrated in the extractive distillation process. Besides, more high price steam is needed in case OFHI as more reboiler duty is needed in regeneration column and the bottom temperature (414 K) in regeneration column is higher than that (348 K) in extractive distillation. (4) The total columns reboiler heat duties (9.66 MW) in the heat integration case OPHI studied in this work has a 32.2% saving compared with base case (14.24 MW) without heat integration. Compared with the partial heat integration design in Luyben's book [38], a 28.4% reduction in the total columns reboiler heat duties is obtained for the same design purity objective. (6) OF2 proves suited as the objective function for extractive distillation to deal with partial or full heat integration as full heat integration can be regarded as the $(Q_{r1} - Q_{c2})$ equal to zero. (7) With the lowest TAC, case OPHI also shows a little less CO_2 emissions and energy consumption per unit product.

4. Extractive distillation with mechanical heat pump

4.1. Evaluation of VRC heat pump assisted distillation process

The base case without heat integration is shown in Fig. 3, the COP_S values for extractive column and regeneration column calculated from Eq. (3) are 9.5 and 8.4, respectively. They are in the value range where a heat pump assisted process should be evaluated in detail according to Plesu et al. [29]. We notice that the temperature difference (10.6 K) between the top of the regeneration column and the bottom of the extractive column is much smaller than that (40 K) between the top and the bottom of the regeneration column which is commonly true for extractive distillation, such a high temperature difference between the top and the bottom of the column is adverse to the performance of the heat pump process.

In extractive distillation, Luo et al. [39] obtained a 24% TAC reduction by using the top vapour stream to drive the side reboiler. Inspired by their study and by a recent pressure swing adsorption study where heat integration between two consecutive columns is done [40], we propose a new flow sheet sequence shown in Fig. 6 that one part of the extractive column reboiler duty is heated by the top vapour of the regeneration column with heat pump 2, and the left part is supplied by the top vapour of the extractive column with heat pump 1. Two heat exchangers are used for transferring the heats from the two top vapour streams. The heat transfer areas are calculated separately. Auxiliary condenser is needed for cooling the other part of the top vapour of the extractive column. The design results are shown in Fig. 6, and please refer to Fig. 3 for the input information of the feed streams and columns.

In order to respectively show the cost saving of the extractive and regeneration columns, we compared them separately with their corresponding heat pump assisted process.

4.1.1. VRC heat pump assisted extractive column

For the heat pump assisted column, the choice of compression ratio (the ratio of outlet and inlet pressure of compressor) reflects whether the temperature driving force is enough to heat up the column reboiler or not. In this study, the outlet pressure of compressor (OPC_1) for extractive column is regarded as variable to evaluate the performance of compressor as the inlet pressure of top vapour distillate is 0.6 atm that chosen from thermodynamic insight [13]. The results are shown in Table 4 for a payback period of 3 years and corresponding temperature difference.

As OPC_1 increases, so does the temperature driving force, and the energy cost increases due to a greater of compressor work, but the capital cost and TAC with 3 years payback period of extractive column with heat pump decrease first and then increase. The high values of capital cost and TAC at OPC_1 = 2 atm is because the temperature driving force is too small, leading to a big heat exchanger area and capital cost. So OPC_1 = 2.5 atm is used hereafter and the comparison of extractive column with and without heat pump are shown in Table 5.

From Table 4 and Fig. 7, we know that (1) there remains a condenser duty in VRC heat pump process. The reason is that after being compressed and heat exchanged, the top vapour becomes high pressure liquid, it is partial vaporized after throttle valve and it needs to be cooled to the top temperature before being refluxed into the column. (2) The energy cost in extractive column is reduced by 77.0% as most of the condenser duty is reused for heating up reboiler thanks to the heat pump. (3) The capital cost increases 2.5 times as the compressor's cost is much higher than that of the heat exchanger and column shell. The heat transfer area in the process with heat pump increases by 20% more than that without heat pump. (4) Then for a 3 year payback period, the VRC HP process is not competitive for the extractive column. However, the TAC for the process with VRC heat pump drops below the no heat pump process if the payback period is greater than 6 years. The 10 year total cost for the process with VRC heat pump (10.07×10^6 \$) is reduced by 23.5% compared with that of the process without heat pump (13.17×10^6 \$). (5) CO_2 emissions (kg/h) for the process with VRC heat pump is only 15.3% of that without heat pump.

4.1.2. VRC heat pump assisted regeneration column

The outlet pressure of compressor for regeneration column (OPC_2) is regarded as variable to evaluate the performance of compressor with the top vapour distillate at atmosphere. The results are shown in Table 6.

As OPC_2 increases, so does the temperature driving force and the energy cost due to a greater compressor work while the capital cost and TAC with 3 years payback period of extractive column with heat pump decreases first and then increases. The high values of capital cost and TAC at OPC_2 = 4.5 atm is because the temperature driving force is relatively small, causing a big heat exchanger

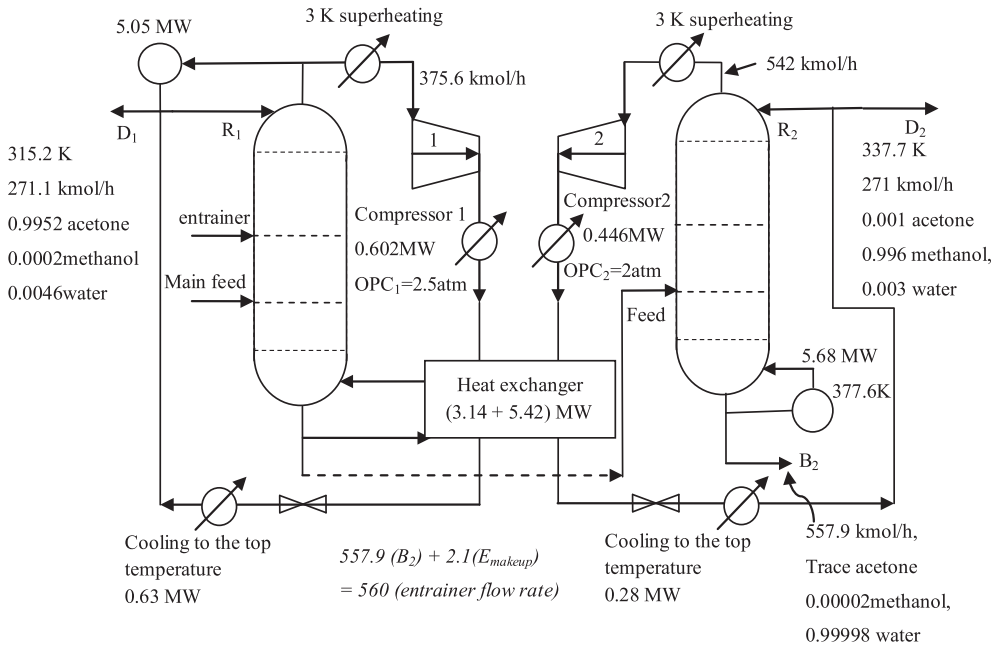

Fig. 6. Partial VRC heat pump for extractive distillation process.

Table 4
Cost data for extractive column with heat pump at different compressor outlet pressure.

OPC_1/atm	2	2.5	3	4	5
TD/K	2.7	10.5	17.1	28.1	37.1
Energy cost/10^6 \$	0.199	0.234	0.266	0.319	0.365
Capital cost/10^6 \$	8.543	7.728	7.968	8.578	9.125
TAC at PP = 3/10^6 \$	3.046	2.81	2.921	3.178	3.406

Table 5
Comparison of extractive column with and without VRC heat pump.

Heat pump	No	Yes
Q_C/MW	8.21	1.63
Q_R/MW	8.56	0.42
Q_{HE}/MW	0	8.14
A_C/m^2	861	171
A_R/m^2	434	22
A_{HE}/m^2	0	1365
Compressor work/MW	No	1.559
COP	–	5.2
Capital cost of compressor/10^6 \$	0	4.608
Energy cost per year/10^6 \$	1.016	0.234
Capital cost/10^6 \$	3.008	7.728
CO_2 emissions/kg/h	2762.3	422.3
TAC at PP = 3/10^6 \$	2.018	2.810
TAC at PP = 10/10^6 \$	1.317	1.007

area and capital cost. So OPC_2 = 5 atm is used hereafter and the comparison of the regeneration column with and without heat pump are shown in Table 7.

From Table 6 and Fig. 8, we know that (1) the energy cost in regeneration column with heat pump is reduced by 77.8% while the capital cost increases 4.3 times. For a 3 year payback period, the VRC heat pump is again not competitive. However, the CO_2 emissions are reduced a lot, and the TAC for the VRC heat pump assisted regeneration column gets competitive when the payback period is over 8 year. The 10 year total cost for the process with heat pump (6.66 × 10^6 \$) is reduced by 16.0% compared with that of the process without heat pump (7.93 × 10^6 \$).

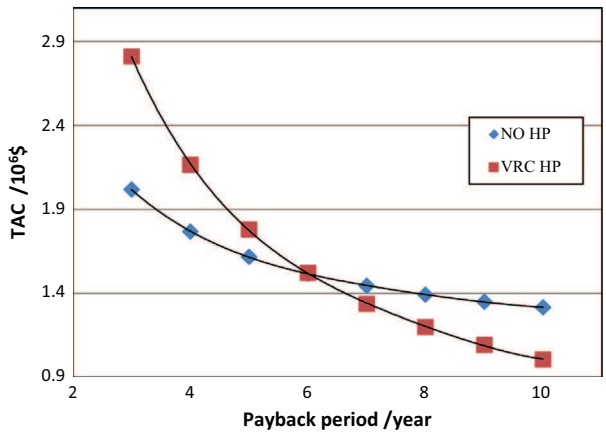

Fig. 7. Comparison of total annual cost for no heat pump and VRC heat pump extractive column following payback period.

Table 6
Cost data for regeneration column with heat pump at different compressor outlet pressure.

OPC_2/atm	4.5	5	5.5	6	7
TD/K	3.8	7.3	10.6	13.7	19.2
Energy cost/10^6 \$	0.141	0.149	0.156	0.164	0.178
Capital cost/10^6 \$	5.489	5.169	5.147	5.202	5.384
TAC at PP = 3/10^6 \$	1.970	1.872	1.872	1.898	1.972

4.1.3. Full VRC heat pump process

Full VRC heat pump process means that both column reboiler are heated up through heat pump as shown in Fig. 1(a). The outlet pressures of compressors are 2.5 atm and 5 atm taking from above. The cost data of the process full VRC are shown in Table 7. Again it is better to use heat pump for both extractive and the regeneration column from the economic and environmental views after payback period is greater than 6.5 years.

Table 7
Comparison of regeneration column with and without heat pump.

Heat pump	No	Yes
Q_C/MW	5.30	0.75
Q_R/MW	5.68	0.15
Q_{HE}/MW	0	5.53
A_C/m^2	182	26
A_R/m^2	288	8
A_{HE}/m^2	0	1334
Compressor work/MW	No	1.117
COP	–	4.9
Capital cost of compressor/10^6 \$	0	3.506
Energy cost per year/10^6 \$	0.673	0.149
Capital cost/10^6 \$	1.192	5.169
CO_2 emissions/kg/h	1832.9	253.9
TAC at PP = 3/10^6 \$	1.071	1.872
TAC at PP = 10/10^6 \$	0.793	0.666

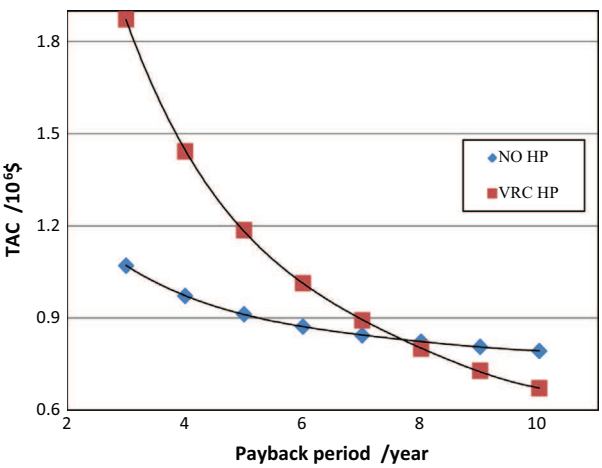

Fig. 8. Comparison of total annual cost for no heat pump and VRC heat pump regeneration column following payback period.

Table 8
Cost data of the process without heat pump, full and partial VRC heat pump.

VRC heat pump	No	Partial	Full
Q_C/MW	13.51	5.96	2.38
Q_R/MW	14.24	5.68	0.56
Q_{HE}/MW	0	8.56	13.68
A_C/m^2	1043	606	197
A_R/m^2	722	288	28
A_{HE}/m^2	0	1720	2683
Compressor work/MW	No	1.048	2.676
COP	–	8.2	5.1
Capital cost of compressor/10^6 \$	0	3.763	8.113
Energy cost per year/10^6 \$	1.692	0.799	0.384
Capital cost/10^6 \$	4.244	8.612	12.932
CO_2 emissions/kg/h	4595.1	2025.7	673.0
TAC at PP = 3/10^6 \$	3.107	3.670	4.695
TAC at PP = 10/10^6 \$	2.116	1.660	1.677

4.1.4. Partial VRC heat pump

After validation, the outlet pressure of compressor2 is 2 atm due to the decrease of temperature difference, and much reduction in capital cost for heat pump is possible.

The cost data of the process without heat pump, and partial VRC are shown in Table 8 and the TAC at different payback periods are shown in Fig. 9

From Fig. 9 and Table 8, we know that (1) the VRC heat pump process for a 3 year payback period is much higher than the process without heat pump. Compared with the process without heat pump, the total heat transfer area ($A_C + A_R + A_{HE}$) in full heat pump

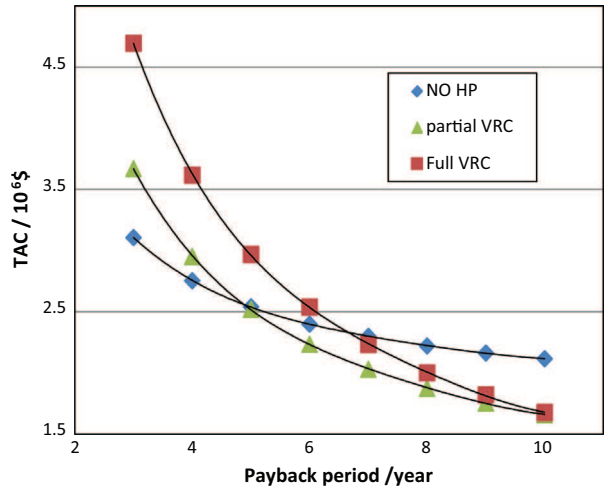

Fig. 9. Total annual cost of three different processes following payback period: no heat pump, partial VRC heat pump and full VRC heat pump.

process and partial heat pump process increases by 1.65 times and 1.48 times instead of decrease. Indeed, the condenser area A_C is spared by the VRC heat pump technique, but this is overweighed by the increase of the heat transfer area A_{HE} for heat exchanger due to the small temperature driving force (7.3 K). Another reason is that the capital cost of the necessary compressor is huge and increase quickly following the increase of compression ratio. (2) On the other hand, the energy cost per year decreases by 2.1 times in the process with partial VRC heat pump, and 4.4 times in the process with full VRC heat pump. The CO_2 emissions in partial VRC and full VRC heat pump process reduce by 2.3 and 6.8 times compared the process without heat pump. (3) Hence, the capital cost payback periods are 6.8 years and 5 years for full VRC process and partial VRC process. The 10 years total capital and energy cost are reduced by 20.7% and 21.6%, from (21.16×10^6 \$) to (16.77×10^6 \$) with full VRC and (16.77×10^6 \$) with partial VRC. (4) The initial capital cost decrease by 33.4% in the proposed partial VRC process compared with full VRC process because the process coefficient of performance (COP) increase from 5.1 to 8.2.

In summary, from the view of economic, the partial VRC heat pump process is the preferred choice, but from the environmental aspect, the full VRC heat pump process is better than the partial VRC as the CO_2 emissions are reduced by almost 3 times from 2025.7 to 673.0 kg/h.

4.2. Evaluation of BF heat pump assisted distillation process

The key parameter in the BF heat pump process is the outlet pressure of the throttle valve since it determines whether or not there is enough temperature driving force to remove the condenser heat duty. So the outlet pressure of throttle valve (OPT) is used as the variable for the evaluation of BF heat pump assisted distillation process. Notice that the operating pressures of the base case are 0.6 atm for the extractive column and 1 atm for regeneration column, so the outlet pressure of throttle valves will be lower than 1 atm.

4.2.1. BF heat pump assisted extractive column

For the extractive column, the bottom liquid is the mixture of non-product component and entrainer instead of high purity product stream. So the saturated vapour pressure of that mixture will determine the feasibility of the BF heat pump process. As the entrainer is usually a heavy boiling component with a low

Table 9
Cost data for the extractive column with BF heat pump at different throttle valve outlet pressures.

OPT_1/atm	0.07	0.09	0.1	0.11
TD/K	13.6	8.8	6.5	3.8
Energy cost/10^6 \$	0.305	0.272	0.258	0.246
Capital cost/10^6 \$	9.550	9.116	9.038	9.238
TAC at PP = 3/10^6 \$	3.489	3.311	3.271	3.325

saturated vapour pressure, it will give benefit to use BF heat pump in the extractive distillation process.

The effect of throttle outlet pressures (OPT_1) is shown in Table 9, starting from 0.07 atm to provide enough temperature difference.

As OPT_1 increases, the bubble point and dew point of the bottom liquid mixtures increase, leading to the decrease of the temperature driving force to remove the condenser duty. Meanwhile, the energy cost decreases as the compressor duty decreases. However, the capital cost decreases until OPT_1 = 0.1 atm, after that the capital cost increase due to the increase of heat exchanger cost overwhelms the benefit caused by the decrease of the compressor duty. The TAC at 3 year payback period quantitatively shows the effect of OPT_1 on the extractive column. So OPT_1 = 0.1 atm is used hereafter and the comparison of extractive column with and without BF heat pump are shown in Table 10.

Just like the process with VRC heat pump, the BF heat pump process also increases the total heat transfer area instead of decrease. The energy cost per year decreases by 3.9 times but the capital cost increases by 3 times. In summary, the 10 year total cost is saved by 11.8% and the CO_2 emissions is reduced by 6.8 times. Over the long term, the benefits of the BF heat pump assisted extractive distillation column are obvious in both economic cost and environmental impact.

4.2.2. BF heat pump assisted regeneration column

The effect of the outlet pressures of throttle for regeneration column (OPT_2) is regarded as the main variable of the process and the results are shown in Table 11.

Again, as OPT_2 increases, the temperature driving force for removing the condenser duty decreases, and the energy cost decrease as the compressor duty decrease. At OPT_2 = 0.22 atm, the cost for heat exchanger increases quickly leading to the increase of capital cost. Considering the TAC at 3 year payback period, OPT_2 = 0.2 atm is chosen hereafter for regeneration column with BF heat pump and the results are shown in Table 12.

The energy cost per year for the regeneration column with BF heat pump decreases by 4.6 times, and the capital cost increases by 4.6 times. Generally speaking, the 10 year total cost is reduced by 12.4% and the CO_2 emissions are reduced from 1832.9 kg/h to 226.3 kg/h. Again, over the long term, the benefits of BF heat pump for the entrainer regeneration column than base case is obvious in both economic and environment aspect.

Table 10
Comparison of the extractive column with and without BF heat pump.

Heat pump	No	Yes
Q_C/MW	8.21	1.87
Q_R/MW	8.56	0
Q_{HE}/MW	0	8.15
A_C/m^2	861	43
A_R/m^2	434	0
A_{HE}/m^2	0	1472
Compressor work/MW	No	2.183
COP	–	3.7
Capital cost of compressor/10^6 \$	0	6.072
Energy cost per year/10^6 \$	1.016	0.258
Capital cost/10^6 \$	3.008	9.038
CO_2 emissions/kg/h	2762.3	401.6
TAC at PP = 3/10^6 \$	2.018	3.271
TAC at PP = 10/10^6 \$	1.317	1.162

Table 11
Cost data for the entrainer regeneration column with BF heat pump at different throttle valve outlet pressure.

OPT_2/atm	0.1	0.15	0.2	0.22
TD/K	18.5	10.3	4.2	2.1
Energy cost	0.212	0.172	0.146	0.137
Capital cost	6.201	5.579	5.494	5.934
TAC at PP = 3/10^6 \$	2.279	2.032	1.977	2.115

Table 12
Comparison of the entrainer regeneration column with and without BF heat pump.

Heat pump	No	Yes
Q_C/MW	5.30	1.01
Q_R/MW	5.68	0
Q_{HE}/MW	0	5.46
A_C/m^2	182	16
A_R/m^2	288	0
A_{HE}/m^2	0	1526
Compressor work/MW	No	1.230
COP	–	4.4
Capital cost of compressor/10^6 \$	0	3.794
Energy cost per year/10^6 \$	0.673	0.146
Capital cost/10^6 \$	1.192	5.494
CO_2 emissions/kg/h	1832.9	226.3
TAC at PP = 3/10^6 \$	1.071	1.977
TAC at PP = 10/10^6 \$	0.793	0.695

4.2.3. Full BF heat pump process

Full BF heat pump process means that both column condensers are cooled down by the vaporization of the bottom liquid streams after throttle valve as shown in Fig. 1(b). The outlet pressures of the two throttle valves are 0.1 atm and 0.2 atm taking from above, and the design results are shown in Table 12.

4.2.4. Partial BF heat pump process

Again, in order to reduce the capital cost of full BF heat pump process, a new partial BF heat pump flow sheet is proposed as shown in Fig. 10. One part of the bottom liquid of the extractive columns is throttled to a specified pressure in order to move heat from the top vapour of the entrainer regeneration column, and the other part is throttled to another pressure to cool down the top vapour of the extractive column. Auxiliary condenser is used to match the top demand of heat duty of the extractive column. The design results are shown in Fig. 10, and please refer to Fig. 3 for the input information of the feed streams and columns.

After validation, 0.3 atm is chosen for the OPT_2 in partial BF heat pump process instead of 0.2 atm in full BF heat pump process because the decrease of temperature difference, leading to much reduction in capital cost for heat pump.

The cost data of the process without heat pump, full and partial BF heat pump are shown in Table 13 and the TAC at different payback periods are shown in Fig. 11.

From Fig. 11 and Table 13, we know that (1) compared with the process without heat pump, the total heat transfer area in full and partial BF heat pump process increase by 1.73 times and 1.28 times. (2) The energy cost per year dramatically by 2.0 times in the process with partial BF heat pump, and 4.2 times in the process with full BF heat pump. The CO_2 emissions in partial BF and full BF heat pump process reduce by 2.2 and 7.3 times compared the process without heat pump. This is the main advantages of heat pump technique. (3) Meanwhile, the total capital cost increase dramatically due to the cost of compressors. (4) The capital cost payback

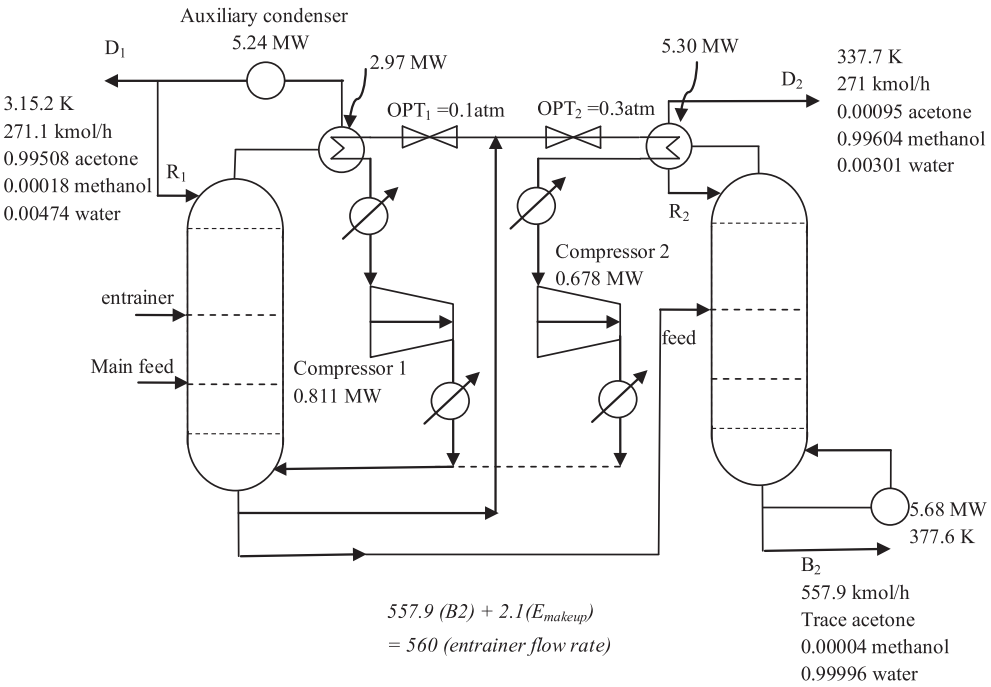

Fig. 10. Partial BF heat pump for extractive distillation process.

Table 13
Cost data of the process without heat pump, partial and full BF heat pump.

BF Heat pump	No	Partial	Full
Q_C/MW	13.51	6.44	2.88
Q_R/MW	14.24	5.68	0
Q_{HE}/MW	0	8.27	13.61
A_C/m^2	1043	575	59
A_R/m^2	722	288	0
A_{HE}/m^2	0	1401	2998
Compressor work/MW	No	1.489	3.413
COP	–	5.6	4.0
Capital cost of compressor/10^6 \$	0	5.024	9.866
Energy cost per year/10^6 \$	1.692	0.828	0.404
Capital cost/10^6 \$	4.244	9.682	14.532
CO_2 emissions/kg/h	4595.1	2106.8	627.9
TAC at PP = 3/10^6 \$	3.107	4.072	5.265
TAC at PP = 10/10^6 \$	2.116	1.803	1.961

periods are 8.0 years and 6.2 years for full and partial BF process. (5) The 10 years total capital and energy cost are reduced by 7.3% and 14.8%, from (21.16×10^6 \$) to (19.61×10^6 \$) with the full BF and to (18.03×10^6 \$) with partial BF. (6) The partial BF gives a 33.3% reduction in the capital cost compared with full BF process. Meanwhile, the process coefficient of performance increases by 40%.

In summary, from the view of economics, the partial BF heat pump process is better than the full BF heat pump process, but from the environmental aspect, the full BF heat pump process is better than the partial BF process as the CO_2 emissions is reduced by 3.3 times from 2106.8 to 627.9 kg/h.

4.3. Summary of mechanical heat pump assisted extractive distillation process

In general, compared with the traditional process, the full heat pump assisted extractive distillation process demonstrates a strong advantage in both economical and environmental aspects. The full VRC heat pump shows a better performance than the full BF heat pump since the 10 year total cost is further reduced by

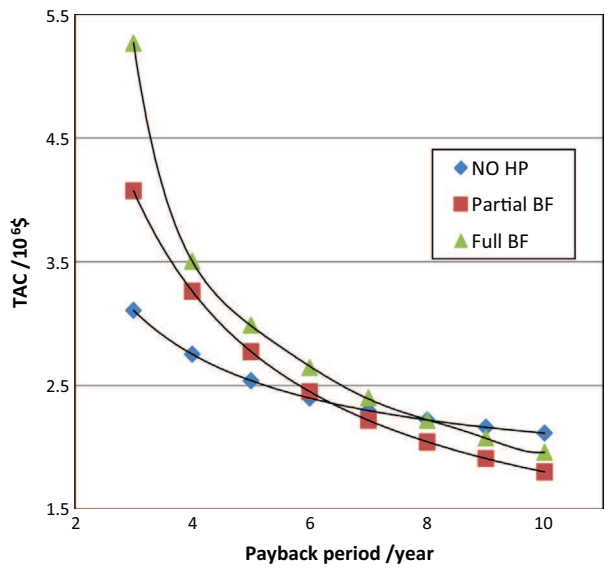

Fig. 11. Total annual cost of three different processes following payback period: no heat pump, partial BF heat pump and full BF heat pump.

14.5%, but and CO_2 emissions increase by 6.7%. The partial VRC heat pump process proposed in this study has 1.7×10^5 \$ reduction in 10 year total cost and 3.8% CO_2 emissions reduction comparing with the proposed partial BF heat pump process. The CO_2 emissions in partial VRC heat pump process are only 44.1% of that in traditional process though it is 3 times compared with full VRC heat pump process. The proposed partial heat pump (partial VRC and partial BF) processes based on the character of extractive distillation can effectively decrease the initial capital cost and increase the process coefficient of performance. In summary, from the economical view, the partial VRC heat pump process is the best choice in mechanical heap pump process, but from the environmental aspect, the full BF heat pump process is better than other alternatives.

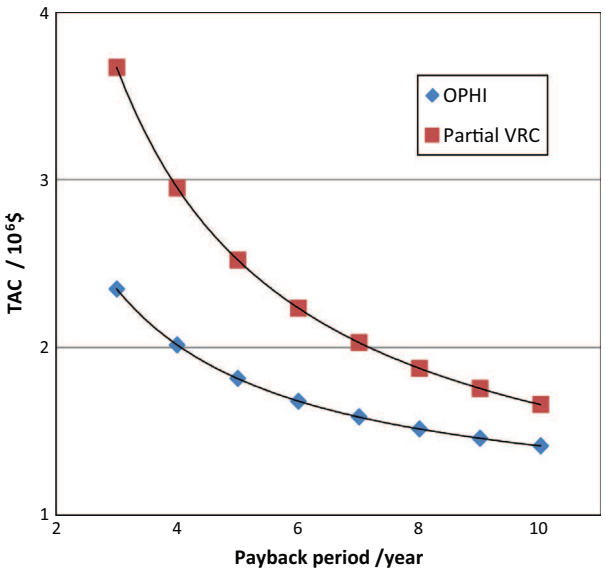

Fig. 12. Total annual cost of optimal partial heat integration and partial VRC heat pump process following payback period.

Table 14
Comparison of optimal partial HI, partial VRC processes.

Process	OPHI	PVRC
Initial investment/10^6 $	4.013	8.612
CO_2 emissions/kg/h	3117.2	2025.7
TAC at PP = 3/10^6 $	2.349	3.670
TAC at PP = 10/10^6 $	1.414	1.660

4.4. Comparison of OPHI and partial VRC

As shown before, OPHI is the best choice in DEHI processes, whereas partial VRC gives the lowest TAC. Thus, we show the comparison of OPHI and partial VRC in Fig. 12 and Table 14.

From Table 14 and Fig. 12, we remark that (1) the optimal partial heat integration process is preferable from the economical point of view. It gives a 2.46×10^6 $ and a 7.02×10^6 $ total process cost saving over a 10 year period compared with partial VRC and base case, respectively. The optimal partial heat integration process overwhelms the partial VRC heat pump process because the temperature differences between the extractive and regeneration columns are higher, leading to relatively poor coefficient of performance of heat pump process. (2) On the contrary, CO_2 emissions are reduced by more than 35% in partial VRC heat pump process comparing to optimal partial heat integration process. The potential of heat pump process in reducing CO_2 emissions contributes its interest.

5. Conclusions

Double-effect heat integration (DEHI) and mechanical heat pump for the separation of minimum azeotropic mixture acetone–methanol with heavy entrainer water have been investigated.

Firstly, three kinds of DEHI processes are studied. Optimization is carried out with the SQP method in Aspen plus software by using an objective function where the commonly found in literature direct partial heat integration and full partial heat integration processes represent extremum behaviour. We propose a novel optimal partial heat integration process that goes further than direct partial heat integration by optimizing all other variables as well. The results show that all DEHI processes give a massive reduction in TAC, energy cost and CO_2 emissions. The optimal partial heat integration achieves 32.3% and 24.4% savings in energy cost and TAC compared with the optimally designed CED process without heat integration and is better than other DEHI processes.

Secondly, the mechanical heat pump processes VRC and BF are evaluated. New partial VRC and partial BF heat pump are proposed to benefit from that the small temperature difference between the bottom of the extractive column and the top of the regeneration column. The process coefficient of performance increases by 60.7% and 40.0% compared with the full VRC and full BF heat pump process. The results show that partial VRC process gives better performance from economical view while full BF process leads better performance in environmental aspect.

In summary, the lowest TAC process is the proposed optimal partial heat integration and the lowest CO_2 emissions process is the full BF process. Partial VRC process gives a trade-off between TAC and CO_2 emissions comparing to full VRC process, and it also significantly reduces the initial investment.

Acknowledgment

X. You thanks the Chinese Scientific Council for its support of this work.

References

[1] Linnhoff B, Dunford H, Smith R. Heat integration of distillation columns into overall processes. Chem Eng Sci 1983;38(8):1175–88.
[2] Ramzan N, Degenkolbe S, Witt W. Evaluating and improving environmental performance of HC's recovery system: a case study of distillation unit. Chem Eng J 2008;140:201–13.
[3] Luis P, Amelio A, Vreysen S, Calabro V, Van der Bruggen B. Simulation and environmental evaluation of process design: distillation vs. hybrid distillation–pervaporation for methanol/tetrahydrofuran separation. Appl Energy 2014;113:565–75.
[4] Lei Z, Li C, Chen B. Extractive distillation: a review. Sep Purif Rev 2003;32(2):121–213.
[5] Rodriguez-Donis I, Gerbaud V, Joulia X. Thermodynamic insights on the feasibility of homogeneous batch extractive distillation, 1. Azeotropic mixtures with a heavy entrainer. Ind Eng Chem Res 2009;48(7):3544–59.
[6] Rodriguez-Donis I, Gerbaud V, Joulia X. Thermodynamic insights on the feasibility of homogeneous batch extractive distillation, 2. Low-relative-volatility binary mixtures with a heavy entrainer. Ind Eng Chem Res 2009;48(7):3560–72.
[7] Shen W, Benyounes H, Gerbaud V. Extension of thermodynamic insights on batch extractive distillation to continuous operation. 1. Azeotropic mixtures with a heavy entrainer. Ind Eng Chem Res 2013;52(12):4606–22.
[8] Petlyuk F, Danilov R, Burger J. A novel method for the search and identification of feasible splits of extractive distillations in ternary mixtures. Chem Eng Res Des 2015;99:132–48.
[9] Jana AK. Heat integrated distillation operation. Appl Energy 2010;87(5):1477–94.
[10] Gutiérrez-Guerra R, Segovia-Hernández JG, Hernández S. Reducing energy consumption and CO_2 emissions in extractive distillation. Chem Eng Res Des 2009;87(2):145–52.
[11] Knapp JP, Doherty MF. Thermal integration of homogeneous azeotropic distillation sequences. AIChE J 1990;36(7):969–84.
[12] Luyben WL. Comparison of extractive distillation and pressure-swing distillation for acetone methanol separation. Ind Eng Chem Res 2008;47(8):2696–707.
[13] You X, Rodriguez-Donis I, Gerbaud V. Improved design and efficiency of the extractive distillation process for acetone–methanol with water. Ind Eng Chem Res 2015;54(1):491–501.
[14] Kravanja P, Modarresi A, Friedl A. Heat integration of biochemical ethanol production from straw – a case study. Appl Energy 2013;102:32–43.
[15] Palacios-Bereche R, Ensinas AV, Modesto M, Nebra SA. Double-effect distillation and thermal integration applied to the ethanol production process. Energy 2015;82:512–23.
[16] Luo H, Liang K, Li W, Li Y, Xia M, Xu C. Comparison of pressure-swing distillation and extractive distillation methods for isopropyl alcohol/diisopropyl ether separation. Ind Eng Chem Res 2014;53(39):15167–82.
[17] Bruinsma OSL, Spoelstra S. Heat pumps in distillation. In: Haan AB, Kooijman H, Gorak A, editors. Proceedings symposium distillation and absorption 2010. Eindhoven, Netherlands; 2010. p. 21–8. ISBN 978-90-386-2215-6.

[18] Modla G, Lang P. Heat pump systems with mechanical compression for batch distillation. Energy 2013;62:403–17.
[19] Fonyo Z, Benkö N. Comparison of various heat pump assisted distillation configurations. Chem Eng Res Des 1998;76(3):348–60.
[20] Díez E, Langston P, Ovejero G, Romero MD. Economic feasibility of heat pumps in distillation to reduce energy use. Appl Therm Eng 2009;29(5):1216–23.
[21] Harwardt A, Marquardt W. Heat-integrated distillation columns: vapor recompression or internal heat integration? AIChE J 2012;58(12):3740–50.
[22] Flegiel F, Sharma S, Rangaiah GP. Development and multiobjective optimization of improved cumene production processes. Mater Manuf Process 2015;30:444–57.
[23] Chew JM, Reddy CCS, Rangaiah GP. Improving energy efficiency of dividing-wall columns using heat pumps, organic Rankine cycle and Kalina cycle. Chem Eng Process: Process Intens 2014;76:45–59.
[24] Reddy CCS, Fang Y, Rangaiah GP. Improving energy efficiency of distillation using heat pump assisted columns. Asia-Pac J Chem Eng 2014;9:905–28.
[25] Fonyo Z, Mizsey P. Economic application of heat pumps in integrated distillation systems. Heat Reccov Syst CHP 1994;14(3):249–63.
[26] Kiss AA, Landaeta SJF, Ferreira CAI. Towards energy efficient distillation technologies – making the right choice. Energy 2012;47(1):531–42.
[27] Van de Bor DM, Ferreira CAI. Quick selection of industrial heat pump types including the impact of thermodynamic losses. Energy 2013;53:312–22.
[28] Chua KJ, Chou SK, Yang WM. Advances in heat pump systems: a review. Appl Energy 2010;87(12):3611–24.
[29] Plesu V, Bonet-Ruiz AE, Bonet J, Llorens J. Simple equation for suitability of heat pump use in distillation. In: Klemes JJ, Varbanov SV, Liew PY, editors. 24th European symposium on computer aided process engineering. Amsterdam: Elsevier; 2014. p. 1327–32. ISBN 978-0-444-63456-6.
[30] Smith R, Delaby O. Targeting flue gas emissions. Chem Eng Res Des 1991;69(6):492–505.
[31] Gadalla MA, Olujic Z, Jansens PJ, Jobson M, Smith R. Reducing CO_2 emissions and energy consumption of heat-integrated distillation systems. Environ Sci Technol 2005;39(17):6860–70.
[32] Waheed MA, Oni AO, Adejuyigbe SB, Adewumi BA, Fadare DA. Performance enhancement of vapor recompression heat pump. Appl Energy 2014;114:69–79.
[33] Douglas JM. Conceptual design of chemical processes. New York: McGraw-Hill; 1988.
[34] Marshall, Swift. Average M & S index for year 2011. Chem Eng 2012;119:84.
[35] You X, Rodriguez-Donis I, Gerbaud V. Low pressure design for reducing energy cost of extractive distillation for separating Diisopropyl ether and Isopropyl alcohol. Chem Eng Res Des 2015 [accepted].
[36] You X, Rodriguez-Donis I, Gerbaud V. Investigation of separation efficiency indicator for the optimization of the acetone–methanol extractive distillation with water. Ind Eng Chem Res 2015;54(43):10863–75.
[37] You X, Rodriguez-Donis I, Gerbaud V. Extractive distillation process optimisation of the 1.0-1a class system, acetone-methanol with water. In: Klemes JJ, Varbanov SV, Liew PY, editors. 24th European symposium on computer aided process engineering. Amsterdam: Elsevier; 2014. p. 1315–20. ISBN 978-0-444-63456-6.
[38] Luyben WL, Chien IL. Design and control of distillation systems for separating azeotropes. John Wiley & Sons; 2011.
[39] Luo H, Bildea CS, Kiss AA. Novel heat pump assisted extractive distillation for bioethanol purification. Ind Eng Chem Res 2015;54(7):2208–13.
[40] Loy YY, Lee XL, Rangaiah GP. Bioethanol recovery and purification using extractive dividing-wall column and pressure swing adsorption: an economic comparison after heat integration and optimization. Sep Purif Technol 2015;149:413–27.