HAL
open science

Materials Testing

Walter Lauriks, Philippe Leclaire

To cite this version:

Walter Lauriks, Philippe Leclaire. Materials Testing. Handbook of Signal Processing in Acoustics, 2008, 10.1007/978-0-387-30441-0_61 . hal-01328131

HAL Id: hal-01328131

https://hal.science/hal-01328131v1

Submitted on 7 Jun 2016

HAL is a multi-disciplinary open access archive for the deposit and dissemination of scientific research documents, whether they are published or not. The documents may come from teaching and research institutions in France or abroad, or from public or private research centers.

L'archive ouverte pluridisciplinaire **HAL**, est destinée au dépôt et à la diffusion de documents scientifiques de niveau recherche, publiés ou non, émanant des établissements d'enseignement et de recherche français ou étrangers, des laboratoires publics ou privés.

61 Materials Testing

Walter Lauriks[1,3] *and Philippe Leclaire*[2,3]

[1]*Katholieke Universiteit Leuven, Heverlee, Belgium,*
e-mail: Walter.Lauriks@fys.kuleuven.ac.be
[2]*Université de Bourgogne, Nevers, France.*
[3]*Laboratorium voor Akoestiek en Thermische Fysica, K.U. Leuven, Leuven, Belgium*

1 • Introduction

In recent years, a number of models to calculate the acoustical behaviour of porous materials (sound absorption, sound insulation and vibration damping) have been developed [1]. Although these models are based on physical sound theories, they require a number of material parameters and the output of a calculation will depend on the accuracy of the input parameters. Depending on the complexity of the porous material and the configuration to be modelled, up to seven parameters may be needed.

A porous material, as used in noise control applications, is made of a solid elastic matrix, saturated by air. Between these two phases, several interactions exist, making the acoustical behaviour of a porous material totally different from that of nonporous elastic solids. Although the materials are often highly porous (porosities higher than 95 % can occur), viscous friction of the air in the pores and heat exchange between the air and the frame have to be accounted for.

2 • Sound Propagation in Rigid Porous Materials

In many cases for air-saturated materials, the porous frame can be considered to be much more rigid and heavier than air and a simplified model can be used in the rigid-frame approximation. The interest in theory of sound propagation in rigid porous materials dates from the time of Lord Rayleigh, with substantial contributions of Zwikker and Kosten [2] in the 1940s. The importance of the flow resistivity or permeability was quickly recognised and this resulted in some simple empirical formulas that predict the acoustic behaviour on the basis of this one single parameter [3,4,5]. New life was breathed into this research with the work of Attenborough [6,7], who stressed the importance of the tortuosity and pointed out that the complexity of the pore shape should be accounted for by some pore shape factor. A substantial refinement in the physical study of wave propagation in porous media was performed by Johnson et al. [8], who introduced the concept of dynamic tortuosity to account for the frequency-dependent behaviour of the viscous effects in the pores. The concept of the viscous characteristic length Λ was introduced to integrate the complexity of the pore shape. For sound-absorbing materials saturated by air, the deformation of the air is isothermal at low frequencies due to the very good thermal exchange between the air in the pores and the frame that has an almost infinite thermal heat capacity and hence remains at constant temperature. At high frequencies, the compression and dilatation of the air become adiabatic, resulting in a frequency-dependent compressibility to cover the entire frequency range to describe this effect. The most significant work in this area has been done by Champoux and Allard [9] and Lafarge [10], who introduced the concept of thermal characteristic length Λ'.

2.1 Porosity

One of the basic material parameters for sound-absorbing and sound-insulating materials is the porosity ϕ. It is defined as the volumic ratio of the amount of air in the sample that is accessible from outside to the total volume of the sample. In acoustic terminology, closed cells are not considered as part of the porosity but constitute part of the elastic frame. The main influence of the presence of closed cells is that they change the effective elasticity and density of the frame. If the material contains no closed cells and if the density of the frame material is known, the porosity can easily be determined from the apparent density of the sample. This is the case, for instance, for mineral wool materials or materials made from sintered glass beads. If the material may contain closed cells or if the density of the frame material is not exactly known, as is often the case for plastic foams, evaluation

FIGURE 1 Schematical representation of the porosimeter. The sample is contained in a closed cell and volume is changed using a moveable piston. In practice, the volume changes are extremely small.

of the porosity is slightly more complicated. The basic technique has been proposed by Zwikker and Kosten, [2] but it has been developed into a precise and modern method by Champoux et al. [11] and Henry [12]. The method is shown schematically in Figure 1 and is based on the ideal gas law at constant temperature. The pressure change in a closed volume (with and without sample) is measured as a function of small volume changes, the temperature being kept constant. This method can easily be automated using an electronic pressure transducer.

It is our experience that for low-density plastic foams, the porosity is almost always very close to 1. For granular materials, the porosity is often below 0.3. For compressed thermoplastic foams, the porosity can deviate substantially from 1.

Recently, a new method based on the analysis of a reflected ultrasonic pulse at the surface of the sample has been proposed by Fellah et al. [13]. This method is particularly interesting in combination with the ultrasonic method for evaluating the tortuosity described in Section 2.3.

2.2 Flow Resistivity

The flow resistivity σ (or alternatively the permeability) has been recognised as a crucial parameters for the attenuation of sound in a porous material from the time of Zwikker and Kosten. For simple sound-absorbing materials, like open-cell foams or mineral wool, some empirical formulas have been designed that predict the sound velocity in the material and the characteristic impedance of the material as a function of frequency using only the flow resistivity as a material parameters [3]. These equations have later been refined by Mechel [4] and Miki, [5] and within their range of applicability, these equations give reasonably accurate results. The flow resistivity can be determined with a simple method described in ISO 9053 [14] and is shown in Figure 2. A static airflow Q is passed through the

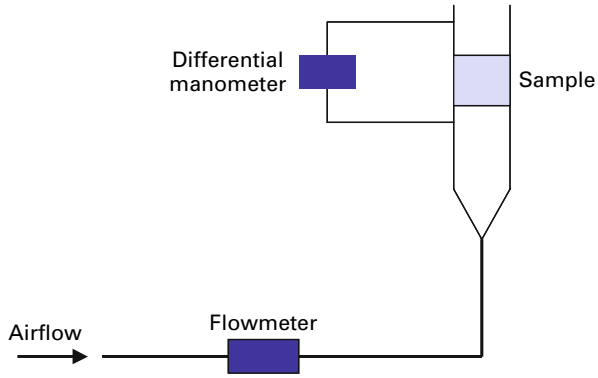

FIGURE 2
Schematic representation of the flow resistance meter.

sample and the pressure drop Δp that is caused by the viscous friction is measured across the sample. The flow resistivity is the ratio of these two quantities, normalised per unit thickness and unit area of the sample:

$$\sigma = \frac{\Delta p}{Q}\frac{S}{d},$$

with S the area and d the thickness of the sample. An alternative method, using an AC fluid flow generated by an oscillating (at low frequency) piston is also used and the results agree reasonably well with the static method [15]. The flow resistivity describes the viscous friction in the sample at DC or low frequency. At very high frequency, the influence of viscous friction becomes negligible. The transition between the "low" and "high" frequency regime is determined by the viscous characteristic length (see Section 2.4). The experimental setup of the flow resistivity meter is extremely simple, the main sources of errors being leaks between the sample and the tube wall and possible nonlinear effects due to a volume flow that is too high.

2.3 Tortuosity

The significance of the tortuosity (also called sinuosity or "shape factor") was already recognised in early publications. A precise definition was given by Biot (see, for instance, Ref. [1]). Basically, the tortuosity is needed because the actual particle velocity at a microscopic level in the pores deviates from the average particle velocity at a macroscopic scale. This leads to a difference in kinetic energy, which is corrected for by multiplying the density with a factor that is equal to the ratio of these kinetic energies:

$$\alpha_\infty = \frac{\int_V v^2 \, \mathrm{d}V}{\left(\int_V \vec{v} \, \mathrm{d}V\right)^2},$$

with V a volume much larger than the pore size, but much smaller than the wavelength.

It has been shown by Brown [16] that the tortuosity can be evaluated from an electrical conduction experiment. The sample is saturated with an electrical conducting liquid and the electrical resistivity of the saturated sample Ω_{sample} is compared with the resistivity of the liquid Ω_{liquid}. The tortuosity is then given by

$$\alpha_\infty = \phi \frac{\Omega_{\text{sample}}}{\Omega_{\text{liquid}}}.$$

The method can obviously only be applied when the frame of the porous material is a nonconducting solid. The method has been optimised by Champoux [17].

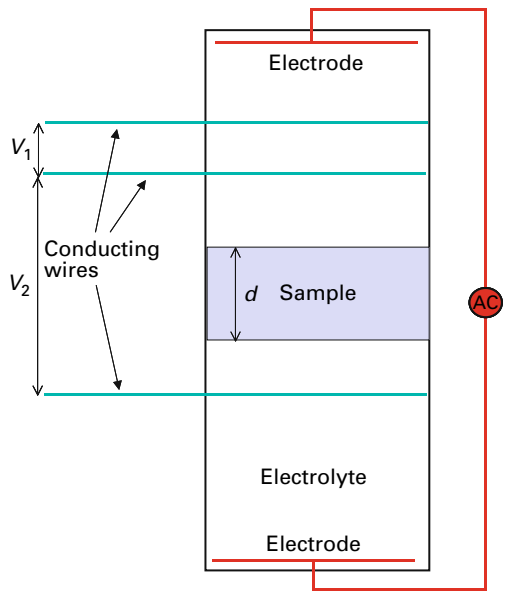

FIGURE 3 Schematic representation of the tortuosimeter proposed by Champoux. The sample is mounted in a plastic cylinder tube that is terminated by two electrodes and filled with an electrolyte. An AC source generates a plane electric field in the tube. The voltage difference V_1 leads to the resistivity of the liquid, and the resistivity of the sample can be deduced from V_2 [17].

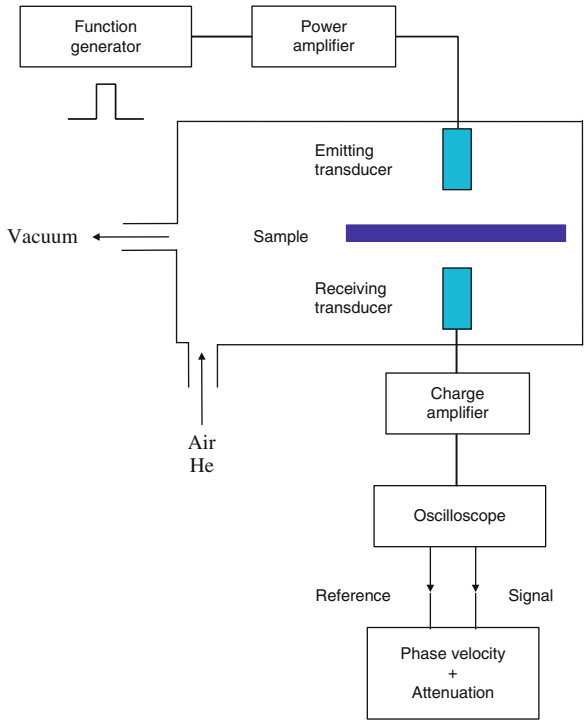

FIGURE 4
Schematic representation of the ultrasonic tortuosimeter [20].

In 1996 Allard et al. [18] and Leclaire et al. [19] have proposed an alternative, quicker method. The method is based on the fact that the phase velocity $c(\omega)$ at very high frequencies in the porous sample depends solely on the tortuosity:

$$\lim_{\omega \to \infty} \frac{c(\omega)}{c_0} = \frac{1}{\sqrt{\alpha_\infty}}$$

with c_0 the sound velocity in free air. An ultrasonic pulse (usually with a frequency content between 100 kHz and 1 MHz) is emitted using an air-coupled ultrasonic transducer (ULTRAN NTC or MICROACOUSTIC capacitive transducer) and a high-voltage pulser. The signal is captured by a second (identical) transducer a few centimetres away from the first and visualised on an oscilloscope. When the sample is placed between the two transducers, the pulse will be delayed because the phase velocity in the sample will always be lower than the velocity in free air (due to the tortuosity effect). The phase velocity in the sample and hence the tortuosity can directly be calculated from this delay and the thickness of the sample. In practice, the phase velocity in the sample is

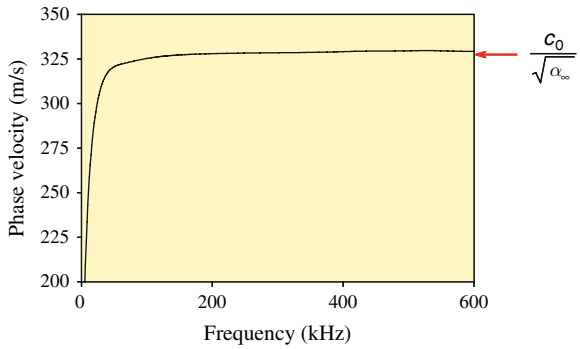

FIGURE 5 Phase velocity in the foam as a function of frequency.

measured as a function of frequency to verify that the high frequency limit has been obtained. This is done by calculating the phase of the Fourier transform of the received pulse after passing through the sample relative to the phase of the Fourier transform of the reference pulse. Figure 5 shows the phase velocity in a porous foam as a function of frequency. The high frequency limit is characterised by a frequency-independent phase velocity and the value of the phase velocity in this regime gives directly the tortuosity.

Both methods agree within the experimental uncertainties.

2.4 Viscous and Thermal Characteristic length

2.4.1 Viscous Characteristic Length

The viscous interaction between the oscillating air and the pore walls is known exactly at low and high frequencies. In the intermediate-frequency regime, this interaction is approximated by a simple analytical function that links the low-and the high-frequency regime [8]. The average pore radius determines the transition between "low" and "high" frequencies. For a material with straight cylindrical pores, this would simply be the radius of the pore, but for a material with pores with a variable cross section, narrow sections will have to contribute more to this average pore size than wide section. Johnson [8] gave the exact definition of the viscous characteristic pore size

$$\Lambda = 2\frac{\int_V v^2 \mathrm{d}V}{\int_S v^2 \mathrm{d}S},$$

where the integral in the numerator is taken over a volume larger than the pore size and the integral in the denominator is taken over the surface of the pores and v is the microscopic velocity

of a nonviscous liquid in the pores. The viscous characteristic length is hence the ratio of the volume to the surface area in the pores, weighted by the square of this velocity (which makes small section contribute more than large sections).

2.4.2 Thermal Characteristic Length

The thermal interaction between compressed and dilated air and the pore walls is known exactly at low (isothermal) and at high (adiabatic) frequencies. In a similar way as for the case of the viscous interaction, this thermal effect is approximated in the intermediate-frequency regime by an analytical function that links the low-to the high-frequency regime [9,10]. The transition between "low" and "high" frequency regime depends on the average distance the heat has to travel to the pore walls and is characterised by the distance:

$$\Lambda' = 2\frac{\int_V \mathrm{d}V}{\int_S \mathrm{d}S}.$$

The thermal characteristic length is hence the ratio of the pore volume to pore surface. It is obvious that since no weighting is applied in this case, the thermal characteristic length will be larger or equal to the viscous characteristic length. In case of a porous material with straight cylindrical pores, these two characteristic lengths are equal and equal to the radius of the pores. In case of fibrous materials, it can be shown [1] that the thermal characteristic length is twice the viscous characteristic length.

2.4.3 Evaluating Viscous and Thermal Characteristic Lengths

The method for evaluating the characteristic lengths has been established by Leclaire et al. [19,20]. These are extracted from the attenuation of an ultrasonic pulse propagating in the porous material. It has been shown that in the high frequency limit, the attenuation per cycle Q is given by

$$\lim_{\omega\to\infty} Q\delta = \left(\frac{1}{\Lambda} + \frac{\gamma - 1}{B\Lambda'}\right)^{-1},$$

where δ is the viscous skin depth equal to

$$\delta = \sqrt{\frac{2\eta}{\omega\rho_\mathrm{f}}},$$

with η the viscosity, ρ_f the density of the fluid, γ the ratio of the specific heats and B the square root of the Prandtl number of the gas saturating the pores.

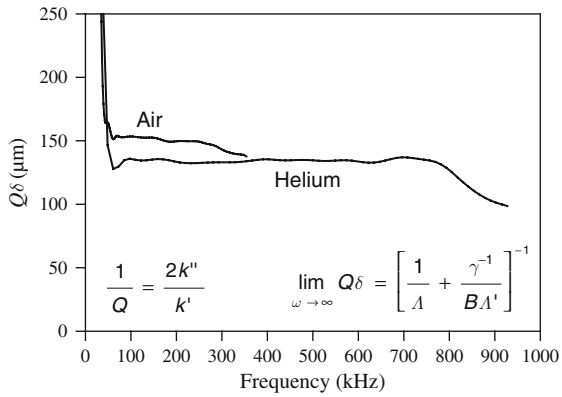

FIGURE 6 Damping in the material at high frequencies can be used to measure the characteristic lengths.

Evaluating the characteristic lengths is particularly difficult since distinguishing between damping due to viscous effects and that due to thermal effects requires two independent measurements in different gases with different thermal and viscous properties. In practice, helium and air or helium and Forane 132a are chosen. Figure 6 shows the $Q\delta$ factor of a foam, measured in helium and air. The horizontal plateau between 100 and 300 kHz for air and between 100 and 800 kHz for helium in the curve characterises the high frequency limit. The characteristic lengths can be obtained by solving these equations for the two unknown quantities Λ and Λ'. The drop-off at 300 kHz in air and 800 kHz in helium is due to scattering of the sound wave in the porous material.

The thermal characteristic length can also be linked with the internal surface area of the porous material and can be determined from a BET adsorption measurement, well known in powder technology [21]. These measurements agree well with the ultrasonic results.

3 • Sound Propagation in Elastic Porous Materials

As mentioned in the previous chapter, approximating the material as a rigid porous material gives good results in many applications for many sound-absorbing materials. However, this approximation will not always hold, and in a number of cases, the acoustic material will have to be described with the full theory for sound propagation in poroelastic media [1]. For instance, if the porous layer is fixed to a vibrating plate, the (complex) elastic coefficients of the material will be of crucial importance [22]. If the flow resistivity and the tortuosity of the material are high (as is often the case for good sound-absorbing materials), the movement of the frame cannot be neglected and the elasticity will

have to be included in the model. Evaluating the elastic coefficients of poroelastic materials is less trivial than it appears. First of all, the elastic coefficients of the "dry" (unsaturated) frame are needed in the models. This leads to two options: either designing an experiment in vacuum where the numerical inversion to extract the elastic coefficients will be easy or designing an experiment in air that is more easy to perform but where the numerical inversion may require the full model. Pioneering work on this subject has been done by Pritz [23]. Moreover, many sound-absorbing or sound-damping materials are viscoelastic and their elastic coefficients may depend on frequency and temperature.

The simplest experiments to evaluate the elastic coefficients are based on the measurement of a vibrational resonance frequency in a sample (rod-shaped, bar-shaped or a plate) of small dimensions compared to the wavelength involved. If the material is isotropic, two complex elastic coefficients are needed. In case the material is anisotropic, more parameters are needed [24,25].

3.1 Evaluating the Complex Shear Modulus

The shear modulus of a poroelastic sample can be measured with the device shown in Figure 7.

Two identical pieces of the sample (typical surface area S is 10 by 10 cm^2 and thickness ℓ about 1 or 2 cm) are glued to a rigid backing (1) and to a thin, moveable plate (2). This plate is connected via an impedance head (4) to a shaker (5). The shaker is excited with a broadband white noise and generates shear waves in the sample. The transfer function between the force F and the acceleration a at the output of the impedance head shows the resonance frequencies in the sample. Neglecting the effect of the air in the pores, the transfer function in the frequency domain is given by

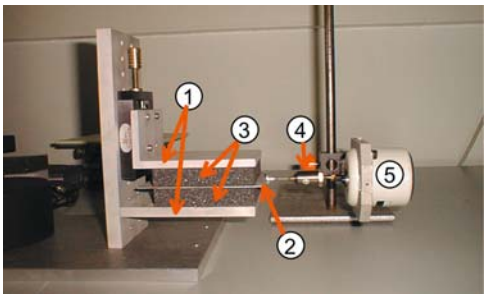

FIGURE 7 Overview of a setup to measure the shear modulus of the frame. (1) rigid plate; (2) moveable plate; (3) sample, (4) B&K 8001 impedance head; (5) shaker.

$$\frac{F}{a} = -\frac{2S}{\omega}\sqrt{N\rho}\ \tan\left(\sqrt{\frac{\rho}{N}}\omega\ell\right) - m,$$

where m is the mass of the moveable plate, the connection rod and the moveable part in the impedance head.

From these resonance frequencies, the density ρ and the thickness ℓ of the sample, the magnitude of the shear N modulus can be determined. From the width at half height of the resonance peaks, the loss angle can de determined. By performing the experiment with samples with different thickness, information about the frequency dependence of the shear modulus can be obtained. Figure 8 shows a typical transfer function. Up to three resonance frequencies can be observed, decreasing in amplitude due to the attenuation in the sample. In any case, this figure shows that the method is limited to the lower part of the audible frequency range.

3.2 Evaluating the Complex Young Modulus

The Young modulus of the sample can be measured with a similar experiment, shown in Figure 9. A rod-shaped specimen of the sample, with length ℓ and a cross section much smaller than the wavelengths involved, is attached to a shaker via an impedance head. Feeding white noise to the shaker will generate longitudinal waves in the sample. The transfer function between the force F and the acceleration a at the output of the impedance head is given by

$$\frac{F}{a} = -\frac{S}{\omega}\sqrt{E\rho}\ \tan\left(\frac{\rho}{E}\omega\ell\right),$$

with S the surface area of the cross section of the bar.

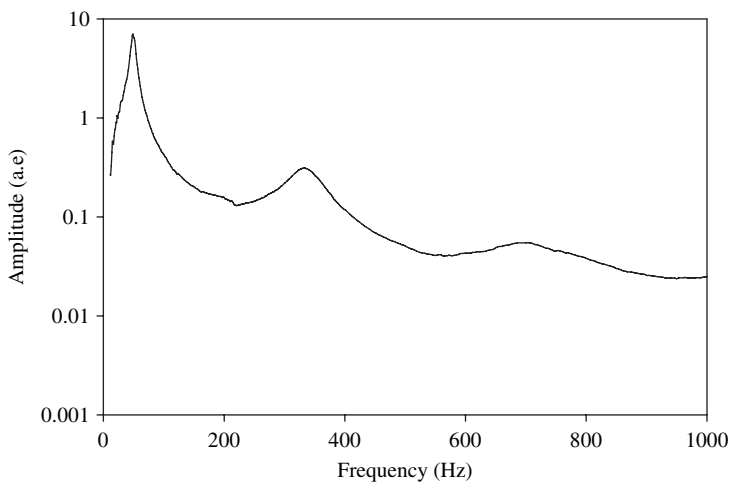

FIGURE 8 Typical shape of the transfer function between force and acceleration of the experiment of Figure 7.

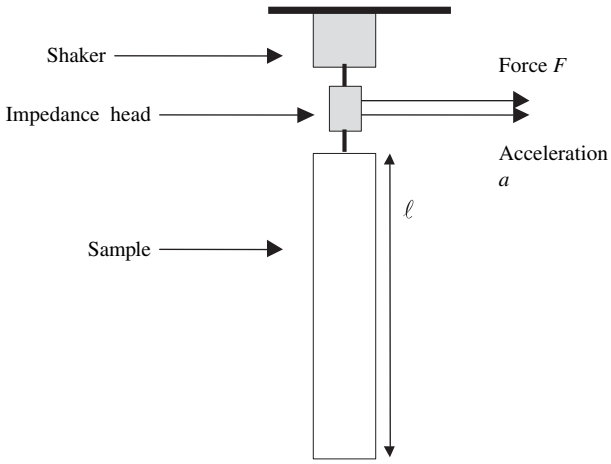

FIGURE 9 Schematic representation of a setup to measure the Young modulus.

From the resonance frequencies in the transfer function, the magnitude of the Young modulus can easily be extracted. The width of the resonance peaks is determined by the damping in the sample.

Typical values of the elastic coefficients of poroelastic foams used for noise control applications range from 10^4 to 10^7 Pa. Several variations of these setups can be designed depending on the shape and size of the available sample. For instance, rod-like samples can be excited in bending mode or plate-like samples can de-excited in a longitudinal thickness resonance.

3.3 Frequency Dependence of the Elastic Coefficients

The methods for evaluating the shear and Young's moduli presented in Sections 3.1 and 3.2 allow a study of these parameters as a function of frequency. However, these methods are based on the vibration of a sample of finite size resulting in a transfer function with resonance peaks. The effect of resonances in the transfer function is that the moduli are determined with a precision that varies and depends on the frequency area examined. The precision is best around the resonance frequencies and poorer elsewhere. In addition, in the experiment for measuring Young's modulus, the wavelengths involved are greater than or in the order of the length of the rod, they must be greater than the lateral size and method is limited to low frequencies (typically 400 Hz). Since most the porous materials are also designed to attenuate structure-borne sound, their structural damping is high, and as a consequence, the elastic coefficients are frequency dependent. Evaluating the elastic

coefficients at low frequencies can have a poor predictive value for higher frequencies.

A new higher frequency method for measuring the shear modulus was proposed by Allard et al. [26] based on the propagation of a structure-borne Rayleigh wave at the interface between a porous solid and a fluid. It was applied to a highly porous foam saturated by air and provided values of the shear modulus at very high frequencies above 3 kHz. Following this work, an experimental and theoretical analysis of the dispersion of guided acoustic wave in a porous layer has been proposed by Boeckx et al. [27] Together with a complete description of a soft porous layer lying on a rigid substrate, they proposed a novel experimental technique for measuring the phase velocities of all the possible modes. The method is based on the generation and detection of standing waves in the layer and on the spatial Fourier transform of the standing-wave pattern. It was inspired from the well-known impedance tube measurement method. The principle is depicted in Figure 10.

The porous layer is excited at one end with a thin aluminium strip used as a line source attached to a shaker at one end and to the sample at the other end. The shaker is fed with a sinusoidally swept signal to maximise the precision of the measurements in a wide frequency range. The other end of the layer is stuck on a rigid end so that incident waves can be reflected. The displacement of the surface is measured with a laser Doppler vibrometer. The laser beam at the output of the laser is collimated and a mirror/lens arrangement ensures that the beam is always focused on the surface any position of the beam. The measurement point can be moved by moving the mirror/lens arrangement. A strip of reflective tape is used to reflect the laser beam in the path of the scanning beam. For each frequency, the path is scanned with a typical step of 1–5 mm and the amplitude and phase of the signal are recorded at each position.

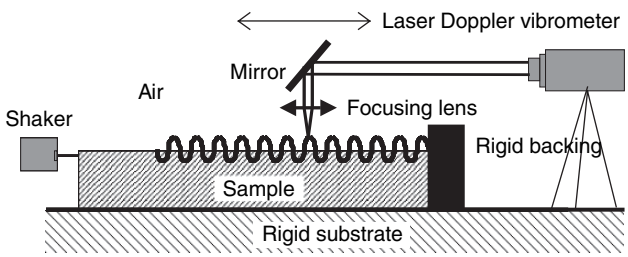

FIGURE 10 Experimental principle for measuring the phase velocities of guided acoustic waves in soft porous layers.

Once the data are recorded, the spatial Fourier transform of the displacement profile in the vicinity of the rigid end can be calculated. The different amplitude peaks in the spatial spectrum provide the wavenumbers of all the guided modes propagating in the layer and the phase velocities are obtained from dividing the frequency by these wavenumbers. The fitting of at least two theoretical dispersion curves to the experimental data allows to investigate both the shear and Young's moduli in the frequency range between the classical vibration method and the Rayleigh wave propagation method. Recent results show a clear frequency dependence of the shear modulus of several foams.

References

1. J.F. Allard, 1993 *Sound propagation in porous media. Modeling sound absorbing materials.* Elsevier Applied Science, London.
2. C. Zwikker and C.W. Kosten, 1949 *Sound absorbing materials*. Elsevier, New York.
3. M.E. Delany and E.N.Bazley "Acoustical characteristics of fibrous absorbent materials" Applied Acoustics **3** 1970 pp. 105–116.
4. F.P. Mechel "Ausweitung der Absorberformel von Delany and Bazley zu tiefen Frequenzen" Acustica **35** (1976) pp. 210–213.
5. Y. Miki "Acoustical models of porous materials – modification of Delany-Bazley model" Journal of the Acoustical Society of Japan **11** (1990) pp. 19–24
6. K. Attenborough "Acoustical characteristics of porous materials" Physics Reports **82** (1982) pp. 179–227
7. K. Attenborough "Acoustical characteristics of rigid fibrous absorbents and granular materials" Journal of the Acoustical Society of America **73** (1983) pp. 785–799
8. D.L. Johnson, J. Koplik, and R.Dashen "Theory of dynamic permeability and tortuosity in fluid saturated porous media" Journal of Fluid Mechanics **176** (1987) pp. 379–402
9. J.F. Allard and Y. Champoux "New empirical equations for sound propagation in rigid frame fibrous materials" Journal of the Acoustical Society of America **91** (1992) pp. 3346–3353
10. D. Lafarge, P. Lemarinier, J. F. Allard, and V.Tarnow "Dynamic compressibility of air in porous structures at audible frequencies" Journal of the Acoustical Society of America **102** (1997) pp. 1995–2007
11. M.R. Stinson and G.A. Daigle "Electronic system for the measurement of flow resistance" Journal of the Acoustical Society of America **83** (1988) pp. 2422–2428.
12. M. Henry Mesures des paramètres caractérisant un milieux poreux. Etude expérimentale du comportement acoustique des mousses aux basses fréquences, PhD thesis Université du Maine, France (1997)
13. Z.E. Fellah, S. Berger, W. Lauriks, C. Depollier, C. Aristegui, and J. Chapelon "Measuring the porosity and the tortuosity of porous

materials via reflected waves at oblique incidence" Journal of the Acoustical Society of America **113** (2004) pp. 2424–2433

14. ISO 9053:1991 Acoustics – Materials for acoustical applications – Determination of airflow resistance
15. M. Garai, and F. Pompoli "A European Inter-Laboratory Test of Airflow Resistivity Measurements" Acta Acustica untited with Acustica **89** (2003) pp. 471–478.
16. R. Brown "Connection between the formation factor for electrical resistivity and fluid-solid coupling factors in Biot's equations for acoustic waves in fluid-filled porous media" Geophysics **45** (1980) pp. 1269–1275.
17. Y. Champoux, *Etude expérimentale du comportement acoustique des matériaux poreux à structure rigide*, PhD thesis, Carlton University, Canada, 1991.
18. J.F. Allard, B. Castagnède, M. Henry, and W. Lauriks "Evaluation of the tortuosity in acoustic porous materials saturated by air" Review of Scientific Instruments **65** (1994) pp. 7654–755
19. P. Leclaire, L. Kelders, W. Lauriks, C. Glorieux, and J. Thoen "Determination of the viscous characteristic length in air-filled porous materials by ultrasonic attenuation measurements" Journal of the Acoustical Society of America **99** (1996) pp. 1944–1948
20. P. Leclaire, L. Kelders, W. Lauriks, M. Melon, N. Brown, and B. Castagnède "Determination of the viscous and the thermal characteristic length of plastic foams by ultrasonic measurements in helium and air" Journal of Applied Physics **80** (1996) pp. 2009–2012
21. P. Lemarinier, M. Henry, J.-F. Allard, J.L. Bonardet, and A. Gedeon "Connection between the dynamic bulk modulus of air in a porous medium and the specific surface" The Journal of the Acoustical Society of America **97** (1995) pp. 3478–3482
22. V. Litwinczik, W. Lauriks, G. Geentjens, G. Vermeir, and A. Lennzi "Experimental acoustic radiation from an elastic plate covered with a porous layer" Proceedings of ISMA2002 conference, Leuven, Belgium pp. 2159–2164
23. T. Pritz "Transfer function method for investigating the complex modulus of acoustic materials" Journal of Sound and Vibration **77** (1981) pp. 93–100
24. S. Sahraoui, E. Mariez, and M. Etchessahar "Linear elastic properties of anisotropic open-cell foams" The Journal of the Acoustical Society of America **110** (2001) pp. 635–637
25. L. Jaouen, "Contribution à la caractérisation mécanique de matériaux poro-viscoélastiques en vibro-acoustique," Ph. D. thesis, Université de Sherbrooke, Canada, 2003.
26. J.F. Allard, G. Jansens, G. Vermeir, and W. Lauriks "Frame-borne surface waves in air-saturated porous media," Journal of the Acoustical Society of America **111** (2002) pp. 690–696.
27. L. Boeckx, P. Leclaire, P. Khurana, C. Glorieux, W. Lauriks, and J. F. Allard "Investigation of the phase velocities of guided acoustic waves in soft porous layers" Submitted to Journal of the Acoustical Society of America **117**(2), (2005) pp. 545–554.