HAL
open science

LPV/H ∞ suspension robust control adaption of the dynamical lateral load transfers based on a differential algebraic estimation approach

Soheib Fergani, L Menhour, Olivier Sename, Luc Dugard, Brigitte d'Andréa-Novel

To cite this version:

Soheib Fergani, L Menhour, Olivier Sename, Luc Dugard, Brigitte d'Andréa-Novel. LPV/H ∞ suspension robust control adaption of the dynamical lateral load transfers based on a differential algebraic estimation approach. AAC 2016 - 8th IFAC International Symposium on Advances in Automotive Control, 2016, Norrköping, Sweden. pp.440-447, 10.1016/j.ifacol.2016.08.065 . hal-01314548

HAL Id: hal-01314548

https://hal.science/hal-01314548v1

Submitted on 17 May 2016

HAL is a multi-disciplinary open access archive for the deposit and dissemination of scientific research documents, whether they are published or not. The documents may come from teaching and research institutions in France or abroad, or from public or private research centers.

L'archive ouverte pluridisciplinaire **HAL**, est destinée au dépôt et à la diffusion de documents scientifiques de niveau recherche, publiés ou non, émanant des établissements d'enseignement et de recherche français ou étrangers, des laboratoires publics ou privés.

CONFIDENTIAL. Limited circulation. For review only.

LPV/$\mathscr{H}_\infty$ suspension robust control adaption of the dynamical lateral load transfers based on a differential algebraic estimation approach

S. Fergani[1], L. Menhour[2], O. Sename[3], L. Dugard[3], B. D'Andrea Novel [4]

Abstract: This paper is concerned with a new global chassis strategy combining the LPV/$\mathscr{H}_\infty$ control framework and the differential algebraic estimation approach. The main objective is to enhance the vehicle performances by adapting its control to the dynamical lateral load transfers using a very efficient algebraic dynamical behaviour estimation strategy. Indeed, the lateral load transfers influence considerably the vehicle dynamical behaviour, stability and safety especially in dangerous driving situations. It is important to emphasize that the dynamical load transfers are different from the static ones generated mainly by the bank of the road. The computation of these dynamics must be based on the effective lateral acceleration and roll behaviour of the car. Such effective data cannot be given directly by the hardware sensors (which give correlated measures).
The information on the real dynamical lateral load transfers is very important to ensure a good adaptation of the vehicle control and performances to the considered driving situation. A very interesting differential algebraic estimation approach allows to provide the effective needed measures for the control strategy using only sensors available on most of commercial cars. It is based on the differential flatness property of nonlinear systems in an algebraic context.
Then, thanks to this estimation approach, the dynamical lateral load transfers can be calculated and used to adapt the vertical performances of the vehicle using the LPV/$\mathscr{H}_\infty$ for suspension systems control.
Simulations performed on non linear vehicle models with data collected on a real car are used to validate the proposed estimation and control approaches. Results show the efficiency of this vehicle control strategy.

Keywords: LPV/$\mathscr{H}_\infty$ suspension control, vehicle dynamics, flatness nonlinear estimation, algebraic estimation .

1. INTRODUCTION

Researchers in automotive systems field have been investigating various strategies of control and estimation that aim at the overall improvement of passengers comfort and vehicle safety. A lot of works have been focusing on the vehicle dynamical behaviour. Indeed, vehicle stability evaluation uses lateral acceleration measurements from the accelerometers (see Tseng et al. (1999)). The lateral acceleration leads also the lateral load transfers that obviously affect the vehicle safety and stability. Then, the information on the lateral acceleration is crucial for the car performances, however, the accelerometers sensors are easily affected by other dynamics such as the roll motion of the vehicle and the road bank of the road.
Considering these unwanted dynamical effects on the effective lateral acceleration information which may lead to misled control synthesis or vehicle instability, the knowledge of the vehicle roll and road bank angles is very important to develop efficient control strategies.
The lateral load transfers depend, in addition to the lateral acceleration, on the roll dynamics of the car. One of the interesting challenges is to separate the road bank and vehicle roll angles which are difficult to differentiate one from the other by using only typical roll-related measurement (lateral acceleration and roll rate). Indeed, it is completely understandable that since the accelerometers are usually mounted on the vehicle body, then the vehicle roll motion and the road bank of the road do have the same effect on the lateral acceleration measurement. Also, the roll rate gyros are linked to the vehicle body and then can provide only a measure including both the effective roll of the car and the road bank angles. Thus, it is clear that it is not possible to separate them using only and directly sensors data.
Recently, some research works have been dealing with this issue. Some interesting studies have shown the importance of separating the vehicle roll and the road bank angles (see Peng and Tseng, Nishio et al. (2001)). Then, several methods have

[1] [1] ISAE-SUPAERO, French Higher Institut of Aerodynamical and Space engineering, 10 Avenue Edouard Belin, BP 54032-31055 Toulouse Cedex, France. Corresponding author: soheib.fergani@isae.fr
[2] [2] Centre de Recherche STIC, Institut Univeristaire de Technologie de Troyes, 9, Rue du Québec, 10000 Troyes, France. lghani.menhour@univ-reims.fr
[3] [3] GIPSA-lab, Control Systems Department, Grenoble University - Grenoble INP, ENSE[3] - Domaine Universitaire BP46, 38402 Saint Martin d'HÃ¨res - Cedex France. olivier.sename@gipsa-lab.grenoble-inp.fr
[4] [4] Mines-ParisTech, CAOR-Centre de Robotique, Mathématiques et systèmes, 60 boulevard Saint-Michel, 75272 Paris cedex 06, France. brigitte.dandrea-novel@mines-paristech.fr

Preprint submitted to 8th IFAC International Symposium on Advances in Automotive Control. Received November 4, 2015.

been introduced to estimate the road bank but by neglecting the effect of the roll motion generated by the suspension systems as in Tseng (2001) and Ryu et al. (2002). Other interesting studies in Goldman et al. (2001) and Carlson and Gerdes (2003) have shown that the separation can be very useful in the vehicle rollover warning and avoidance systems. The vehicle rollover prevention control may require a separate information on the road bank and the vehicle roll because it can create different behaviours of the car during transient driving manoeuvres. Indeed, one very interesting work in this field Ryu and Gerdes (2004), developed a new method for identifying the road bank and vehicle roll separately using a disturbance observer.

In this paper, the authors presents two important results. First a new algebraic estimation of vehicle state (namely the roll θ) and of an unknown input (namely road bank) based on differential flatness properties of non linear systems. This estimation is performed based on real-time numerical filters as developed in Fliess et al. (2008); Mboup et al. (2009). These filters are deduced from operational calculation and algebraic manipulations.

In the second part, the LPV/$\mathscr{H}_\infty$ control strategy based on the algebraic estimation for the suspension systems is developed to enhance the overall vertical dynamics of the vehicle and improve the car safety and stability in critical driving situations (*roll-over, obstacles avoidance,...*). Indeed, the authors have already provided some promising strategies and first results that adapt the vehicle performance to the driving situations as in Fergani et al. (2013b) and Fergani et al. (2013a). In the sequel, the new strategy uses the estimation of the effective vehicle roll, the effective road bank angles and the effective lateral acceleration in order to adapt the vertical performances objectives to the real dynamical behaviour generated by the lateral load transfers.

This paper is structured as follows: Section 2 presents the algebraic estimation approach for the vehicle dynamic states and road bank angles. Section 3 is devoted to the main contribution of the paper, which is to give a new LPV strategy for suspension control adaption to dynamical lateral load transfers based on the non linear algebraic estimation strategy. Then, in Section 4, simulations performed on non linear vehicle models with data collected on real cars prove the efficiency of the presented strategy for improving the vehicle dynamical performances. Conclusions are given in the last Section

2. ESTIMATION OF VEHICLE DYNAMIC STATES AND ROAD BANK ANGLE

2.1 A summary review of algebraic estimators

The generation of reference signals and their derivatives constitute a real issue for control design. To perform this task, the numerical differentiation based on an algebraic nonlinear estimation[5] is used. This estimation is performed using the developments presented in Fliess et al. (2008); Mboup et al. (2009), which give real-time numerical filters. These filters[6] (5) are deduced from operational calculation and algebraic manipulations. Let consider the following real-valued polynomial time function $x_N(t) \in \mathbb{R}[t]$ of degree N

$$x_N(t) = \sum_{\nu=0}^{N} x^{(\nu)}(0)\frac{t^\nu}{\nu!}\,,\ t \geq 0. \tag{1}$$

In the operational domain[7] (see e.g. Yosida (1984)), (1) becomes

$$X_N(s) = \sum_{\nu=0}^{N} \frac{x^{(\nu)}(0)}{s^{\nu+1}}. \tag{2}$$

Multiplying equation (2) on the left by $\frac{d^\alpha}{ds^\alpha}s^{N+1}$, $\alpha = 0, 1, \cdots, N$. The quantities $x^{(\nu)}(0)$, $\nu = 0, 1, \ldots, N$, which are linearly identifiable, satisfy the following triangular system of linear equations:

$$\frac{d^\alpha s^{N+1} X_N}{ds^\alpha} = \frac{d^\alpha}{ds^\alpha}\left(\sum_{\nu=0}^{N} x^{(\nu)}(0)s^{N-\nu}\right),\ 0 \leq \alpha \leq N-1. \tag{3}$$

The terms in (3) ($s^\mu \frac{d^\iota X_N}{ds^\iota}$, $\mu = 1, \ldots, N$, $0 \leq \iota \leq N$), are removed by multiplying both sides of equation (3) by $s^{-\bar{N}}$, $\bar{N} > N$. Now, consider an analytic time function, defined by the power series $x(t) = \sum_{\nu=0}^{\infty} x^{(\nu)}(0)\frac{t^\nu}{\nu!}$, which is assumed to be convergent around $t = 0$. Approximate $x(t)$ by the truncated Taylor expansion $x_N(t) = \sum_{\nu=0}^{N} x^{(\nu)}(0)\frac{t^\nu}{\nu!}$ of order N. Good estimates of the derivatives are obtained by the same calculations as above. Then, the following 1st order formulae may be obtained for filtering and numerical differentiation of signal y (see, *e.g.*, García Collado et al.):

- Filtering:
$$\hat{y}(t) = \frac{2!}{T^2}\int_{t-T}^{t}(3(t-\tau)-T)y(\tau)d\tau \tag{4}$$
- Numerical differentiation of a noisy signal:
$$\hat{\dot{y}}(t) = -\frac{3!}{T^3}\int_{t-T}^{t}(2T(t-\tau)-T)y(\tau)d\tau \tag{5}$$

The sliding time window $[t-T, t]$ may be quite short.

Moreover, the estimation of vehicle states and unknown inputs uses the following properties Barbot et al. (2007); Daafouz et al. (2006); Fliess et al. (2008); Ibrir (2003):

Proposition 1. the algebraic observability of any nonlinear system with unknown inputs is equivalent to express the dynamical state and the unknown inputs as functions of the inputs, the measured outputs and their finite time derivatives.

Proposition 2. A system is said observable with unknown inputs if, any state variable or any input variable, can be formulated as a function of the output and their finite time derivatives. This function can be considered as an input-free estimator. In other words, t means that an input-output system is observable with unknown input if, and only if, its zero dynamics is trivial. In addition, if the system is square, then the system is called flat[8] system with its flat output.

For this study, the following flat outputs are considered:

$$\begin{bmatrix} y_1 \\ y_2 \\ y_3 \end{bmatrix} = \begin{bmatrix} a_y \\ \dot{\psi} \\ \dot{\theta} \end{bmatrix} \tag{6}$$

where a_y is the lateral acceleration, $\dot{\psi}$ is the yaw rate and $\dot{\theta}$ is the roll rate. Notice that such outputs are measured by low cost sensors like gyrometers and accelerometers.

[5] Such estimators are successfully used in intelligent transportation systems applications Abouaissa et al.; Villagra et al. (2011); Menhour et al. (2013).

[6] For the details related to the developments used in this work, we refer the reader to Fliess et al. (2008); Mboup et al. (2009)

[7] $\frac{d}{ds}$ corresponds in time domain to the multiplication both sides by $-t$.

[8] The differential flatness property of nonlinear systems in a differential algebraic context was introduced by Fliess et al. (1995); Levine (2009); Sira-Ramírez and Agrawal (2004)

2.2 Lateral forces estimation

In the proposed approach, we assume that the lateral forces are distributed at the front and at the rear axles. It is well known that for vehicle dynamics simulation, the lateral forces F_{yf} and F_{yr} are expressed by nonlinear functions Pacejka (2004). Such functions require the knowledge of a set of static and dynamical parameters. Here, the use of such models seems to be an expensive solution. For this raison, the algebraic estimation based on the output signals seems more suitable.

According to the observability propositions 1 and 2, the flat outputs y_1 and y_2 of (6) and the vehicle model, the following lateral forces algebraic estimator is deduced:

$$\begin{cases} \hat{F}_{yf}(y_1, y_2, \hat{y}_2) = \frac{L_f m\hat{y}_1 - I_z\hat{y}_2}{L_f + L_r} \\ \hat{F}_{yr}(y_1, y_2, \hat{y}_2) = \frac{L_r m\hat{y}_1 - I_z\hat{y}_2}{L_f + L_r} \end{cases} \tag{7}$$

It should be pointed out that the above estimated lateral forces are used as inputs for the following algebraic estimator of roll and road bank angles.

2.3 Roll and road bank angles estimation

For the design of the vehicle state and unknown inputs algebraic observer, a nonlinear two-wheeled vehicle model is considered. This 3 DOF model (lateral, yaw and roll motions) is given by the following equations:

$$\begin{cases} ma_y + m_s h\ddot{\theta} = \sum_{i=1}^{2} F_{yi} - mg\phi_r \\ I_z\ddot{\psi} - I_{xz}\ddot{\theta} = \sum_{i=1}^{2} M_{zi} \\ I_{xx}\ddot{\theta} + m_s h a_y - I_{xz}\ddot{\psi} = \sum M_x \end{cases} \tag{8}$$

where

$$\begin{cases} \sum_{i=1}^{2} F_{yi} = F_{yf} + F_{yr} \\ \sum_{i=1}^{2} M_{zi} = L_f F_{yf} - L_r F_{yr} \\ \sum M_x = [m_s gh - (K_{\theta f} + K_{\theta r})]\theta - (C_{\theta f} + C_{\theta r})\dot{\theta} \end{cases}$$

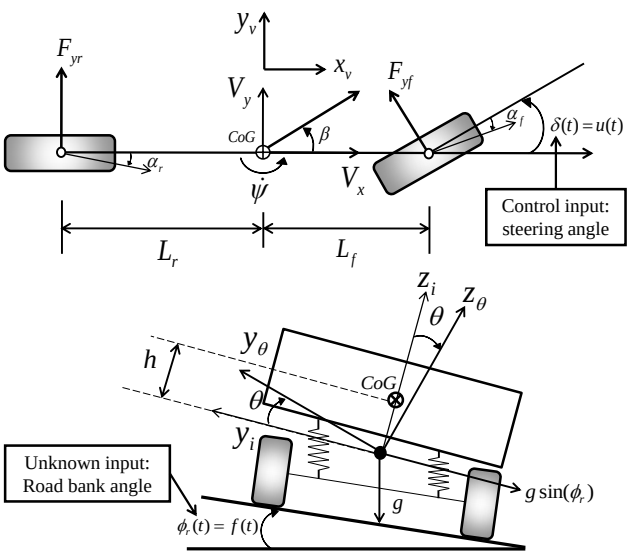

Fig. 1. A two wheeled vehicle model: coupling of lateral dynamics and unknown input (road bank angle)

According to properties 1 and 2, flat outputs (6) and model (8), the following estimators are deduced:

- Roll angle algebraic estimator:

Table 1. notations

Symbol	Variable name
a_y, g	lateral acceleration and acceleration due to gravity $[m/s^2]$
$\dot{\psi}$, ψ	yaw rate $[rad/s]$ and yaw angle $[rad]$
$\dot{\theta}$, θ	roll rate $[rad/s]$ and roll angle $[rad]$
β, δ	sideslip angle at the CoG $[rad]$ and wheel steer angle $[rad]$
ϕ_r	road bank angle $[rad]$
$F_{y(f,r)}$	front and rear lateral forces in the vehicle coordinates $[N]$
$L_{(f,r)}$	distances from the CoG to the front and rear axles $[m]$
h	distance between the roll center and the CoG $[m]$
I_z, I_x	yaw moment of inertia and moment of inertia around x axis $[kg.m^2]$
$C_{(f,r)}$	front and rear cornering stiffnesses $[N/rad]$
$K_{\theta(f,r)}$	front and rear roll stiffness coefficients $[N.m.s.rad^{-1}]$
$C_{\theta(f,r)}$	front and rear roll damping coefficients $[Nm/rads]$
$\alpha_{(f,r)}$	front and rear tire slip angles $[rad]$
m, m_s	vehicle mass and vehicle suspended mass $[kg]$

$$\hat{\theta} = \frac{I_{xx}\hat{y}_3 + m_s h\hat{y}_1 - I_{xz}\hat{y}_2 + (C_{\theta f} + C_{\theta r})\hat{y}_3}{m_s gh - (K_{\theta f} + K_{\theta r})} \tag{9}$$

- Road bank angle (unknown input) algebraic estimator:

$$\hat{\phi}_r = \frac{\hat{F}_{yf}(\hat{y}_1, \hat{y}_2) + \hat{F}_{yr}(\hat{y}_1, \hat{y}_2) - m\hat{y}_1 - m_s h\hat{y}_3}{mg} \tag{10}$$

It is obvious that with flat outputs (6), the relative degrees of lateral forces, roll angle and unknown input are equal to 1. We can also see that the estimators (7), (9) and (10) are implemented thanks to (4) and (5) to perform the filtering and the derivation of y_1, y_2 and y_3 as follows:

- Denoising:

$$\begin{bmatrix} \hat{y}_1 = \hat{a}_y \\ \hat{y}_2 = \hat{\dot{\psi}} \\ \hat{y}_3 = \hat{\dot{\theta}} \end{bmatrix} = \frac{2!}{T^2}\int_{t-T}^{t} (3(t-\tau) - T) \begin{bmatrix} a_y \\ \dot{\psi} \\ \dot{\theta} \end{bmatrix} d\tau \tag{11}$$

- Numerical differentiation of noisy measurements:

$$\begin{bmatrix} \hat{y}_2 = \hat{\dot{\psi}} \\ \hat{y}_3 = \hat{\dot{\theta}} \end{bmatrix} = -\frac{3!}{T^3}\int_{t-T}^{t} (2T(t-\tau) - T) \begin{bmatrix} \dot{\psi} \\ \dot{\theta} \end{bmatrix} d\tau \tag{12}$$

2.4 Algorithm of the algebraic estimators

The following algorithm summarized in Fig. 2shows the execution of all steps to perform the estimation of the vehicle states (lateral forces and roll angle) and unknown input (road bank angle):

Algorithme 1.

Step 1 : filtering of $\hat{y}_1 = \hat{a}_y$, $\hat{y}_2 = \hat{\dot{\psi}}$, $\hat{y}_3 = \hat{\dot{\theta}}$ and numerical differentiation of noisy measurements of $\hat{y}_2 = \hat{\dot{\psi}}$, $\hat{y}_3 = \hat{\dot{\theta}}$ with (11) and (12) respectively.
Step 2 : Estimation of lateral forces with (7).
Step 3 : Estimation of roll and road bank angles using (9) and (10) respectively.

2.5 Validation with experimental data

The validation is carried out with MATLAB®. using real data recorded on an instrumented Peugeot 406 car from race track. The experimental recorded data shown by blue curves in Figs. 3 and 4 and are the lateral forces f_y, the road bank angle $\dot{\phi}_r$ and vehicle roll angle $\dot{\theta}$.

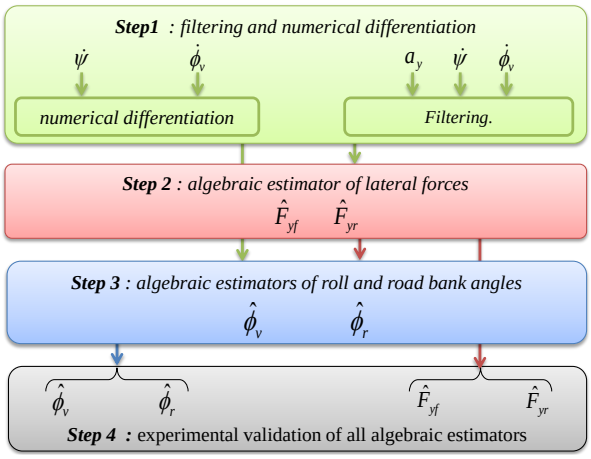

Fig. 2. Block diagram of all algebraic estimators

Fig. 3 presents an experimental validation of lateral forces algebraic estimator (7). Despite that the measured lateral acceleration y_2 and yaw rate y_1 are provided by low cost sensors, the estimator (7) provides an efficient estimation of front and rear lateral forces. However the measured lateral forces are provided by very expensive sensors (around of 100 K.euro/sensor). For this reason, it seems that it is very interesting to develop such virtual sensors based on low cost measurements to avoid prohibitive sensors.

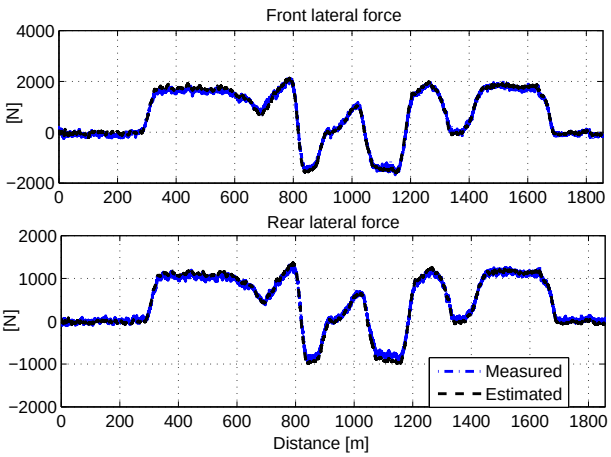

Fig. 3. Lateral forces: measured and estimated

Fig. 4 shows an experimental evaluation of roll and road bank angles estimation. These results confirm the ability of the estimators (9) and (10) to estimate correctly such angles.

The effectiveness of the estimators (7), (9) and (10) is also evaluated through the following normalized error:

$$e_y(i) = 100\,|\hat{y}(i) - y_{mes}(i)|/\max|y_{mes}| \qquad (13)$$

The table 2 summarizes a comparison between the estimations and the measurements using the normalized error (13). Such results confirm that the estimators produce satisfactory behavior. In fact, the maximum values of the normalized errors are less than 3.5 % for the lateral forces, less than 6.5 % for the roll and road bank angles.

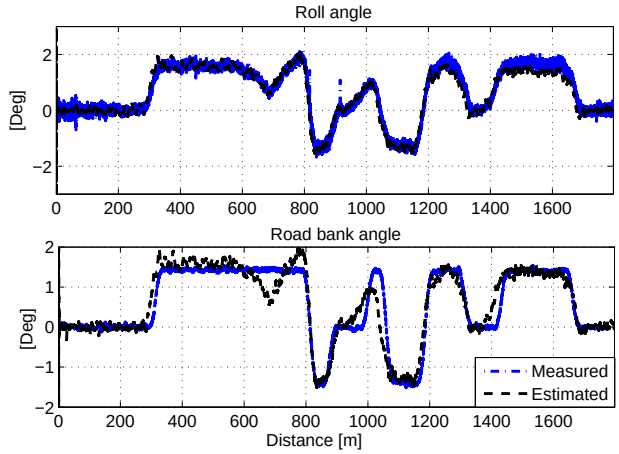

Fig. 4. Roll and road bank angles: measured and estimated

Table 2. Normalized error in % of the estimated states and unknown input

Front lateral force		Rear lateral force	
$\lvert e_{F_{yf}} \rvert$	3.4038	$\lvert e_{F_{yr}} \rvert$	3.3017
Roll angle		**Road bank angle**	
$\lvert e_\theta \rvert$	5.2324	$\lvert e_{\phi_r} \rvert$	6.4521

3. THE PROPOSED LPV/$\mathscr{H}_\infty$ CONTROL STRATEGY BASED ON THE ALGEBRAIC ESTIMATION

Based on the previously presented algebraic estimation strategy, the vehicle dynamical behaviour adaptation to the effective dynamical lateral load transfer is achieved thanks to the LPV framework. Indeed, an online adaptation to these dynamics and then to the driving situation is ensured through the considered varying parameters as shown is the following scheme in Fig. 5.

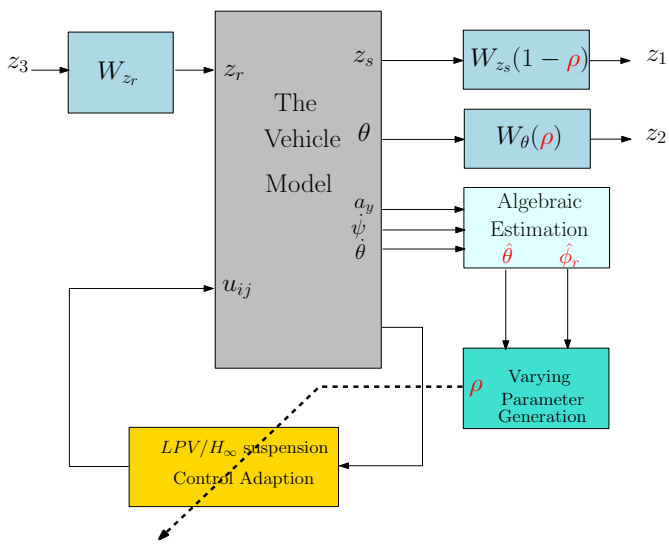

Fig. 5. Scheme of the proposed strategy.

3.1 Control-structure model

The LPV/$\mathscr{H}_\infty$ suspension control is synthetized using a 7 DOF vertical vehicle model, see (14). It includes the chassis acceleration $\ddot{z}_s$, the four wheels accelerations $\ddot{z}_{us_{ij}}$, the roll motion

$$\begin{cases} \ddot{z}_s &= -\left(F_{sz_f}+F_{sz_r}+F_{dz}\right)/m \\ \ddot{z}_{us_{ij}} &= \left(F_{sz_{ij}}-F_{tz_{ij}}\right)/m_{us_{ij}} \\ \ddot{\theta} &= \left((F_{sz_{rl}}-F_{sz_{rr}})t_r+(F_{sz_{fl}}-F_{sz_{fr}})t_f+mh\dot{v}_y\right)/I_{xx} \\ \ddot{\gamma} &= \left(F_{sz_f}l_f-F_{sz_r}l_r-mh\dot{v}_x\right)/I_y \end{cases} \tag{14}$$

acceleration $\ddot{\theta}$ and the pitch acceleration $\ddot{\gamma}$. For the control design purposes, linear models are assumed for the stiffness k_{ij} and damping c_{ij} in the suspension force computation, as given below:

$$F_{sz_{ij}} = k_{ij}(z_{s_{ij}}-z_{us_{ij}})+c_{ij}(\dot{z}_{s_{ij}}-\dot{z}_{us_{ij}})+u_{ij}^{\mathscr{H}_\infty} \tag{15}$$

where $F_{sz_{ij}}$ are the suspension vertical forces and $u_{ij}^{\mathscr{H}_\infty}$ the suspension control.
Note that the characteristics of the stiffness and the damping coefficients are non linear functions for the simulation model Zin et al. (2008).

3.2 Varying parameters generation

The measurement provided by the accelometers and gyros are correlated. It means that the real values of the desired monitored dynamics are not directly obtained and must be calculated. Indeed, while running, the accelometers are supposed to measure the lateral acceleration of the vehicle but this measure a_{ym} includes also the projection of the gravitation acceleration correlated with the vehicle roll angle as follows in Eq. 16:

$$a_{ym} = a_y + g\theta_{gyros} \tag{16}$$

where, a_{ym} is the lateral acceleration value given by the accelerometers, θ_{gyros} the value of the roll angle given by the gyros and a_y the effective value of the lateral acceleration of the car.
Then, to calculate the effective value of the lateral acceleration, one must have the information on the vehicle roll angle. This is achieved thanks to the algebraic estimation presented in (9). Also, the dynamical lateral load transfers depend on the effective value of the vehicle roll, but the value given by the gyros is combined with the road bank angle (ϕ_r) (see Rajamani et al. (2009)). This proves the importance of the previously proposed estimation approach. The effective vehicle roll angle (θ) is then obtained as follows:

$$\theta = \theta_{gyros} - \phi_r \tag{17}$$

where ϕ_r: is the road bank angle.
Furthermore, these influences can be seen as follows in (18), see Anderson (2004) and Milliken and Milliken (1995):

$$\begin{aligned} \Delta\hat{F}_{sz} &= (F_{sz_{fl}}+F_{sz_{rl}}-F_{sz_{fr}}-F_{sz_{rr}}) \\ &= (m_{fl}+m_{rl}-m_{fr}-m_{rr})g-2S_1(\hat{\theta}_{gyros}-\hat{\phi}_r) \\ &\quad -2S_2(a_{ym}-g\hat{\theta}_{gyros})m/l \end{aligned} \tag{18}$$

where $S_1 = \frac{k_f}{t_f}+\frac{k_r}{t_r}$, $S_2 = \frac{l_f h}{t_f}+\frac{l_r h}{t_r}$, F_{sz}: the suspension vertical forces and $\Delta\hat{F}_{sz}$ are the right/left load transfers. It is clear that the load transfers generated by the vehicle roll movements are largely influenced by the effective lateral acceleration a_y, and the effective roll dynamics θ.
Then, the considered varying parameter in this strategy, based on these lateral load transfers, is generated as follows:

$$\rho_a = \left|\frac{\Delta F_{sz}}{\Delta F_{szmax}}\right| \tag{19}$$

Remark 3.1.
- ΔF_{szmax} is calculated by considering the maximum roll angle the vehicle can handle when running.
- Let us recall that this formula in (18) is obtained using the results of previously defined algebraic strategy to estimate the road bank and the roll motion, as follows:

$$a_{ym} = a_y + g\hat{\theta}_{gyros} \tag{20}$$

Then, the effective value of the roll can be obtained:

$$\theta = \hat{\theta}_{gyros} - \hat{\phi}_r \tag{21}$$

The performance improvement will be obtained trough the use of parameter dependent weighting functions together with a particular scheduled control structure.

3.3 LPV/$\mathscr{H}_\infty$ controller design

The suspension control with performance adaptation (see Fergani et al. (2013a)) is presented. The following H_∞ control scheme is considered, including parameter varying weighting functions.

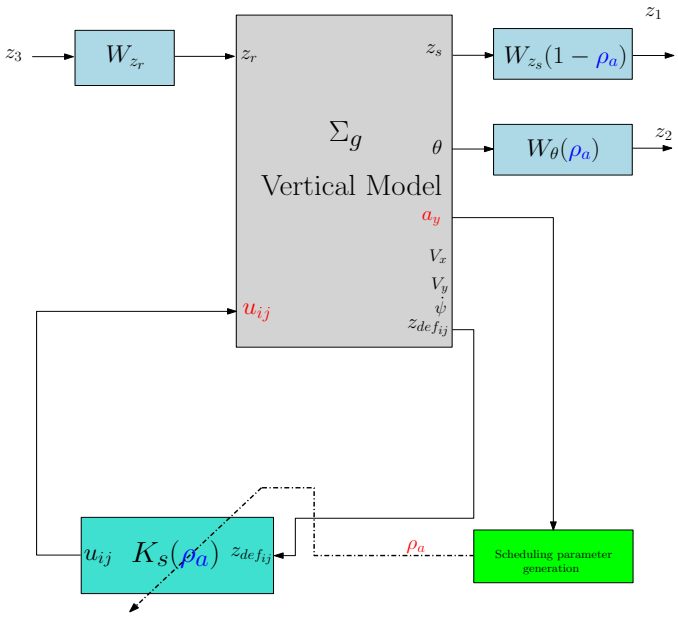

Fig. 6. General scheme of the LPV/$\mathscr{H}_\infty$ suspension control.

where $W_{z_s} = (1-\rho_a)\frac{s^2+2\xi_{11}\Omega_{11}s+\Omega_{11}{}^2}{s^2+2\xi_{12}\Omega_{12}s+\Omega_{12}{}^2}$ is shaped in order to reduce the bounce amplification of the suspended mass (z_s) between $[0,12]$Hz.

$W_\theta = (\rho_a)\frac{s^2+2\xi_{21}\Omega_{21}s+\Omega_{21}{}^2}{s^2+2\xi_{22}\Omega_{22}s+\Omega_{22}{}^2}$ attenuates the roll angle amplification in low frequencies. The role of this adaption is described below.

When the driving situation is dangerous, the vehicle stability is weak and lateral acceleration increases: $\rho_a \to 1$, the roll motion caused is penalized to reduce the load transfer motion as in Fig.

6 to enhance roadholding, stability and safety of the vehicle.

In normal driving situations, the lateral acceleration is low and $\rho_a \to 0$. In this case, the LPV/$\mathscr{H}_\infty$ suspension control focuses on improving passengers comfort by reducing the chassis displacement and accelerations.
$W_u = 3.10^{-2}$ shapes the control signal.

Remark 3.2. The parameters ξ_{ij} of these weighting functions are obtained using genetic algorithm optimization as in Do et al..

According to Fig. 6, the following parameter dependent suspension generalized plant ($\Sigma_g(\rho_a)$) is obtained:

$$\Sigma_g(\rho_a) := \begin{cases} \dot{\xi} = A(\rho_a)\xi + B_1\tilde{w} + B_2 u \\ \tilde{z} = C_1(\rho_a)\xi + D_{11}\tilde{w} + D_{12}u \\ y = C_2\xi + D_{21}\tilde{w} + D_{22}u \end{cases} \tag{22}$$

where $\xi = [\chi_{vert}\ \chi_w]^T$; $\tilde{z} = [z_1\ z_2\ z_3]^T$; $\tilde{w} = [z_{rij}\ F_{dx,y,z}\ M_{dx,y}]^T$; $y = z_{def_{ij}}$; $u = u_{ij}^{\mathscr{H}_\infty}$; and χ_w is the weighting functions state vector and χ_{vert} the state vector of the 7-DOF model (see Eq. 14).
Moreover, it is obvious that, due to the lateral load transfers, the four dampers do not handle the same load and then must not provide the same suspension effort. For this sake, we propose to use the following scheduled suspension control structure. This distribution is handled thanks to the specific structure of the suspension controller, given as follows :

$$K_s(\rho) := \begin{cases} \dot{x}_c(t) = A_c(\rho_a)x_c(t) + B_c(\rho_a)y(t) \\ \begin{pmatrix} u_{fl}^{\mathscr{H}_\infty}(t) \\ u_{fr}^{\mathscr{H}_\infty}(t) \\ u_{rl}^{\mathscr{H}_\infty}(t) \\ u_{rr}^{\mathscr{H}_\infty}(t) \end{pmatrix} = \underbrace{U(\rho_a)C_c^0(\rho_a)}_{C_c(\rho_a)} x_c(t) \end{cases} \tag{23}$$

where $x_c(t)$ is the controller state vector, $A_c(\rho_a)$, $B_c(\rho_a)$ and $C_c(\rho_a)$ controller state matrices scheduled by ρ_a, $u^{\mathscr{H}_\infty}(t) = [u_{fl}^{\mathscr{H}_\infty}(t) u_{fr}^{\mathscr{H}_\infty}(t) u_{rl}^{\mathscr{H}_\infty}(t) u_{rr}^{\mathscr{H}_\infty}(t)]$ the input control of the suspension actuators and $y(t) = z_{def}(t)$. The controller has a partly fixed structure obtained by making the LMIs structure orthogonal with a parameter dependency on the control output matrix. The suspension forces distribution is obtained with the matrix $U(\rho_a)$:

$$U(\rho_a) = \begin{pmatrix} 1-\rho_a & 0 & 0 & 0 \\ 0 & \rho_a & 0 & 0 \\ 0 & 0 & 1-\rho_a & 0 \\ 0 & 0 & 0 & \rho_a \end{pmatrix} \tag{24}$$

The parameter ρ_a (defined in (19)) generates the adequate suspension forces distribution, depending on the load transfer (left $\leftrightarrows$ right) caused by the critical situation.
When a load transfer is performed from the right to the left side, $\rho_a \to 1$, and the suspensions actuators are set to be "hard" and tuned to provide more force to handle the big load transfer (left $\leftrightarrows$ right). The suspensions control at each corner aims at handling the overweight, by providing the accurate suspension force to ensure better stability and handling for the vehicle. Conversely, when the load transfer is carried out on the right side, $\rho_a \to 0$, this control allows to considerably reduce the roll motion of the vehicle when running, the suspensions actuators are then tuned to "soft", and aim at enhancing the passengers comfort.

The LPV system (22) includes a single scheduling parameter and can be described as a polytopic system, i.e, a convex combination of the systems defined at each vertex of a polytope defined by the bounds of the varying parameter.

Remark 1. The proposed *LPV*/$\mathscr{H}_\infty$ robust controller is synthesized by using *LMIs* solution for polytopic systems, (for more details, see Scherer (1996)); the varying parameter ρ_a is considered bounded: $\rho_a \in [0,1]$.

4. SIMULATION RESULTS

This section presents some simulation results to validate the proposed strategy. The model used for simulations is a full vehicle non linear model, (see Poussot-Vassal et al. (2011)). This model was validated by experimental tests on a real car (Reanult Scenic). The following results are those obtained by the *LPV*/$\mathscr{H}_\infty$ controllers for the lateral load transfers adaption based on the algebraic estimation previously described in this study.
The following scenario was chosen to test the efficiency of the proposed strategy:

(1) the vehicle runs at 100km/h in straight line on wet road ($\mu = 0.5$, where μ is a coefficient representing the adherence to the road).
(2) a 5cm bump on the left wheels (from $t = 0.5$s to $t = 1$s),
(3) a line change manoeuvre is performed by the driver,
(4) lateral wind occurs at vehicle's front, generating an undesirable yaw moment (from $t = 1$s to $t = 2.5$s),
(5) a 5cm bump on the left wheels ($t = 2$s), another on the left wheels,($t = 2.5$s),

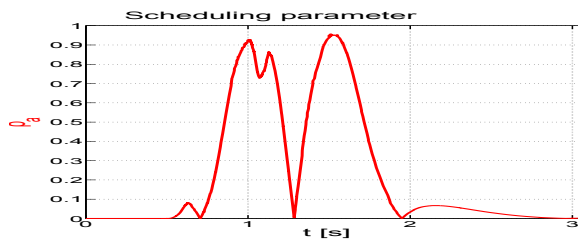

Fig. 7. The varying parameter ρ_a.

Fig. 7 shows the variation of the considered scheduling parameter of the *LPV*/$\mathscr{H}_\infty$ control strategy based on the algebraic estimation.

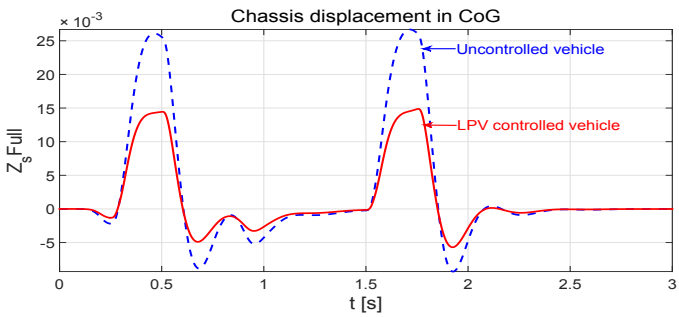

Fig. 8. Chassis displacement in COG z_s.

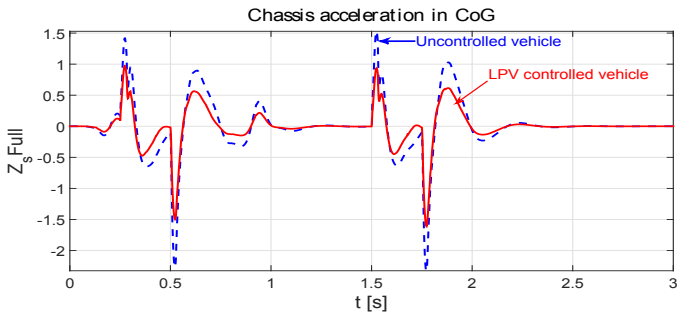

Fig. 9. Chassis acceleration in COG $\ddot{z}_s$.

In Fig. 8 and Fig. 9, the chassis displacement and acceleration are highlighted. Indeed, the proposed strategy manages to reduce the chassis motion and acceleration, improving then the passengers comfort.

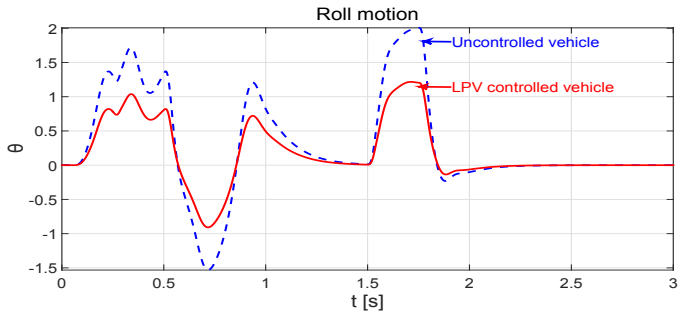

Fig. 10. Roll motion θ.

Fig. 10 shows the roll motion of the car, obtained following the estimation and the calculation of the effective roll motion without the disturbing road bank angle (as previously defined in (20) and (17)). It is clear that the vehicle road handling is enhanced thanks to the LPV scheduling framework. The proposed $LPV/\mathscr{H}_\infty$ penalizes the chassis roll displacement to ensure more tire/road adherence and the vehicle stability. This stability can be evaluated through the following figures:

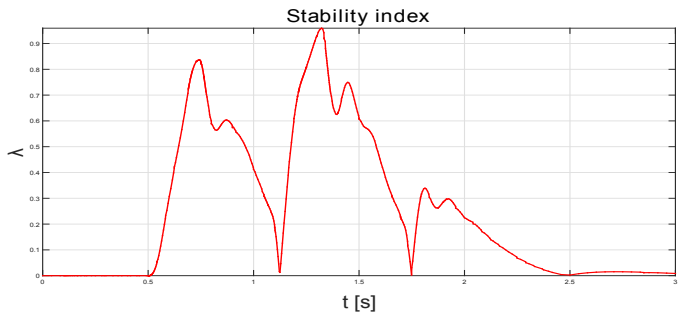

Fig. 11. Stability index λ.

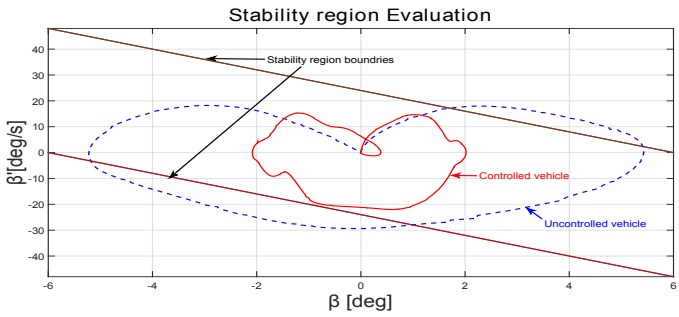

Fig. 12. Evolution of the vehicle in the stability region: β-$\dot{\psi}$ plane.

Since the vehicle stability is directly related to the sideslip (β) motion of the vehicle, judging the vehicle stability region is derived from the phase-plane ($\beta - \dot{\beta}$) as follows:

$$\lambda < 1, \tag{25}$$

where $\lambda = \left|2.49\dot{\beta} + 9.55\beta\right|$ is the "Stability Index" as in Fig. 11.

Fig. 12 shows one of the interesting results of this paper, namely, the vehicle stability enhancement. The evolution of the vehicle in the β-$\dot{\beta}$ plane, clearly demonstrates that the LPV strategy prevents the car from going beyond the stability region limits. This proves the efficiency of the control designed to reach the performance objectives.

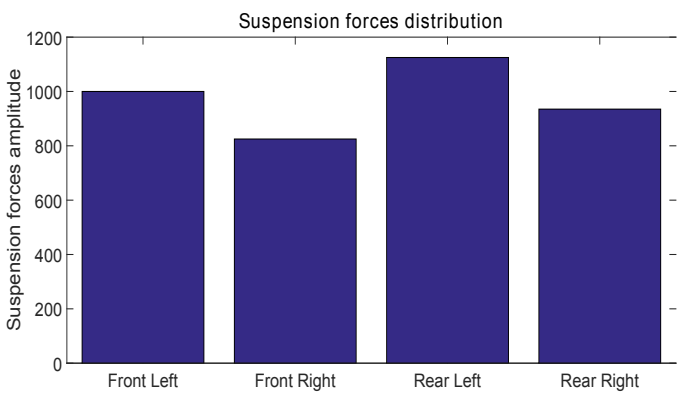

Fig. 13. Suspension forces distribution.

In Fig. 13, the distribution of the four suspension systems is presented. It is clear that, depending on the driving situation, the proposed estimation-scheduled control strategy manages to provide the accurate suspension forces at each corner of the car to achieve the desired performance objectives.

5. CONCLUSIONS AND FUTURE WORK

This paper has presented a new suspension control strategy for the vehicle performances adaptation to the dynamical load transfers and based on an algebraic differential estimation approach.
The algebraic estimation allows to reconstruct accurately the information about the critical dynamics of the car without using

extremely expensive sensors. Then, the proposed estimation-scheduled control strategy with the *LPV*/$\mathscr{H}_\infty$ framework provides a solution for the improvement of the vehicle performances based on the suspension forces distribution.
Simulations of a consistent representative driving situation, performed on a complex nonlinear model, have shown the efficiency of the proposed approach. Results prove that this strategy enhances of the vehicle stability and dynamical behaviour performances improvement.

REFERENCES

Abouaissa, H., Fliess, M., Iordanova, V., and Join, C. (????). Towards a Nonlinear Characterization of a Freeway Network.

Anderson, R. (2004). *Using GPS for model based estimation of criti- cal vehicle states*. Master's thesis, Aubern University, Alabama.

Barbot, J.P., Fliess, M., and Floquet, T. (2007). An algebraic framework for the design of nonlinear observers with unknown inputs. In *46th IEEE conference on decision and control*.

Carlson, C.R. and Gerdes, J.C. (2003). Optimal rollover prevention with steer by wire and differential braking. In *ASME 2003 International Mechanical Engineering Congress and Exposition*, 345–354. American Society of Mechanical Engineers.

Daafouz, J., Fliess, M., and Millérioux, G. (2006). Une approche intrinsèque des observateurs linéaires à entrées inconnues. In *Proceedings of the 17th Conférence Internationale Francophone d'Automatique (CIFA)*. Bordeaux, France.

Do, A.L., Sename, O., and Dugard, L. (????). *"LPV modeling and control of semi-active in automotive systems", 15th chapiter, pp*$381-411$*, in "Control of Linear Parameter Varying Systems with Applications"*. Springer,New-York,.

Fergani, S., Sename, O., and Dugard, L. (2013a). A LPV suspension control with performance adaptation to roll behavior, embedded in a global vehicle dynamic control strategy. In *Control Conference (ECC), 2013 European*, 1487–1492.

Fergani, S., Sename, O., and Dugard, L. (2013b). A new LPV/$\mathscr{H}_\infty$ global chassis control through load transfer distribution and vehicle stability monitoring. In *Proceedings of IFAC Joint conference* 5*th Symposium on System Structure and Control,* 11*th Workshop on Time-Delay Systems* 6*th Workshop on Fractional Differentiation and Its Applications*. Grenoble, France.

Fliess, M., Join, C., and Sira-Ramírez, H. (2008). Non-linear estimation is easy. *Int. J. Model. Identif. Control*, 4, 12–27.

Fliess, M., Lévine, J., Martin, P., and Rouchon, P. (1995). Flatness and defect of nonlinear systems: introductory theory and examples. *International Journal of Control*, 61, 1327–1361.

García Collado, F.D.A., D'Andréa-Novel, B., Fliess, M., and Mounier, H. (????). Analyse fréquentielle des dérivateurs algébriques.

Goldman, R., El-Gindy, M., and Kulakowski, B. (2001). Rollover dynamics of road vehicles: Literature survey. *International Journal of Heavy Vehicle Systems*, 8(2), 103–141.

Ibrir, S. (2003). Online exact differentiation and notion of asymptotic algebraic observers. *IEEE Trans. Automat. Control*, 48(11), 922–937.

Levine, J. (2009). *Analysis and control of nonlinear systems: A flatness-based approach*. Springer Science & Business Media.

Mboup, M., Join, C., and Fliess, M. (2009). Numerical differentiation with annihilators in noisy environment. *Numer. Algor.*, 50, 439–467.

Menhour, L., d'Andréa Novel, B., Boussard, C., Fliess, M., and Mounier, H. (2013). Coupled nonlinear vehicle control: Flatness-based setting with algebraic estimation techniques. *Control Engineering Practice (to appear)*.

Milliken, W. and Milliken, D. (1995). *Race car vehicle dynamics*. Society of Automotive Engineers, Inc.

Nishio, A., Tozu, K., Yamaguchi, H., Asano, K., and Amano, Y. (2001). Development of vehicle stability control system based on vehicle sideslip angle estimation. Technical report, SAE Technical Paper.

Pacejka, H.B. (2004). *Tire and Vehicle Dynamics*. Elsevier.

Peng, A.Y.U.H. and Tseng, H. (????). Experimental verification of lateral speed estimation methods. *a a*, 1(3), 2–4.

Poussot-Vassal, C., Sename, O., Dugard, L., and Savaresi, S.M. (2011). Vehicle dynamic stability improvements through gain-scheduled steering and braking control. *Vehicle System Dynamics*, 49:10, 1597–1621.

Rajamani, R., Piyabongkarn, D., Tsourapas, V., and Lew, J. (2009). Real-time estimation of roll angle and cg height for active rollover prevention applications. In *American Control Conference, 2009. ACC '09.*, 433–438.

Ryu, J. and Gerdes, J.C. (2004). Estimation of vehicle roll and road bank angle. In *American Control Conference, 2004. Proceedings of the 2004*, volume 3, 2110–2115. IEEE.

Ryu, J., Rossetter, E.J., and Gerdes, J.C. (2002). Vehicle sideslip and roll parameter estimation using gps. In *Proceedings of the AVEC International Symposium on Advanced Vehicle Control*.

Scherer, C. (1996). Mixed $\mathscr{H}_2/\mathscr{H}_\infty$ control for time-varying and linear parametrically-varying systems. *International Journal of Robust and Nonlinear Control*, 6(9-10), 929–952.

Sira-Ramírez, H. and Agrawal, S. (2004). *Differentially Flat Systems*. Marcel Dekker.

Tseng, H.E. (2001). Dynamic estimation of road bank angle. *Vehicle System Dynamics*, 36(4-5), 307–328.

Tseng, H.E., Ashrafi, B., Madau, D., Brown, T.A., and Recker, D. (1999). The development of vehicle stability control at ford: Focused section on mechatronics in automotive systems. *IEEE/ASME transactions on mechatronics*, 4(3), 223–234.

Villagra, J., dÁndréa Novel, B., Fliess, M., and Mounier, H. (2011). A diagnosis-based approach for tire road forces and maximum friction estimation. *Control Engineering Practice*, 19(2), 174 – 184.

Yosida, K. (1984). Operational calculus: a theory of hyperfunctions. *Applied mathematical sciences*, 55.

Zin, A., Sename, O., Gaspar, P., Dugard, L., and J.Bokor (2008). Robust LPV - $\mathscr{H}_\infty$ control for active suspensions with performance adaptation in view of global chassis control. *Vehicle System Dynamics*, 46(10), 889–912.