HAL
open science

Modelling mechano-sorption in wood through hygro-locks and other approaches

Joseph Gril

To cite this version:

Joseph Gril. Modelling mechano-sorption in wood through hygro-locks and other approaches. International Symposium on Wood Science and Technology (IAWPS 2015) and 60th Anniversary of the Japan Wood Research Society, Mar 2015, Tokyo, Japan. hal-01295470

HAL Id: hal-01295470

https://hal.science/hal-01295470v1

Submitted on 31 Mar 2016

HAL is a multi-disciplinary open access archive for the deposit and dissemination of scientific research documents, whether they are published or not. The documents may come from teaching and research institutions in France or abroad, or from public or private research centers.

L'archive ouverte pluridisciplinaire **HAL**, est destinée au dépôt et à la diffusion de documents scientifiques de niveau recherche, publiés ou non, émanant des établissements d'enseignement et de recherche français ou étrangers, des laboratoires publics ou privés.

Public Domain

Gril J. (2015) International Symposium on Wood Science and Technology (IAWPS 2015)
and 60th Anniversary of the Japan Wood Research Society,Tokyo, JP, 15-17.03.15, Isogai A, Iwata T. (eds)

Modelling mechano-sorption in wood through hygro-locks and other approaches

Joseph Gril
Laboratory of Mechanics and Civil Engineering, CNRS, Montpellier University, France

Abstract

Mechanosorption refers to the phenomena observed when wood is subjected simultaneously to mechanical loading and sorption resulting from changing hygrothermal conditions. A model based on the concept of hygro-locks has been recently reformulated. The hygro-lock spring further extends under load when softened, but is blocked when hardened. This approach offers an alternative to the widespread mechano-sorptive dashpot where the absolute value of moisture change replaces time increment. It will be presented and analysed in comparison with other models, and suggestions for further work will be discussed.

Keywords

Wood, viscoelasticity, moisture, mechano-sorptive effect, rhéological model

Introduction

Mechanosorption is a phenomenon resulting from the combined action of mechanical load and moisture content (m.c.) change in wood. Creep, relaxation or damping trigerred by changing humidity, expansion ratio modified by the load, permanent set after restrained expansion, are the most well-known expressions of the mechanosorptive (m.s.) effect. There is no clearly convincing explanation for it. The 'breaking of hygrogen bonds' resulting from sorption and reformed at different position under stress (Grossman 1978) does not explain why drying wood creeps more than humid wood, where bonds are also continuously broken an reformed. The transcient increase of molecular mobility resulting from a modification of m.c. was described as a sort of physical de-aging by Hunt and Gril (1996), a temporary disorder of the molecular structure similar to that existing in polymers heated above their glassy transition temperature and suddendly cooled. Such a physical aging in the classical sense, i.e. temperature induced, was actually characterised in wet wood (Dlouha et al 2009). Mukudai and Yata (1986) proposed for an explanation based on cell-wall delamination at the S1/S2 interface to explain mechanosorption. The sophisticated process of load transfer between inner and outer cell-wall layers resulted in complex equations that were hardly usable in practice. However it raised the important issue of the relevant structural scale to consider, in this case the cell-wall layers even, with an underlying molecular process concentrated at the interface between large blocks. Their model was also consistent with the quasi disappearance of mechanosorption in the wet range.

The phenomenology of mechanosorption, on the other hand, is abundantly documented. Ranta-Maunus (1975) modelled the m.s. creep of plywood using viscous-like elements where time has

been replaced by m.c., distinguishing the desorption (-), adsorption (+) and 'adsorption above highest level reached since loading' (++). Hunt in the 80ties introduced the m.s. 'trajectories' where the longitudinal creep compliance is plotted against versus m.c., and the concept of 'creep limit' reached after repeated humidity cycles under load (Fig. 1). His results suggested that the creep limit is approached both in sorption and desorption, and that the apparent recovery observed during adsorption was easily accounted for by assuming that the moisture expansion is modified by the strain (Hunt and Shelton 1987, Hunt 1992). This allowed a much simpler rheological modelling, that will be recalled in the following section. In that approach, the (++) effect is considered as sufficiently taken into account by the higher creep of wetter wood (Montero et al 2012).

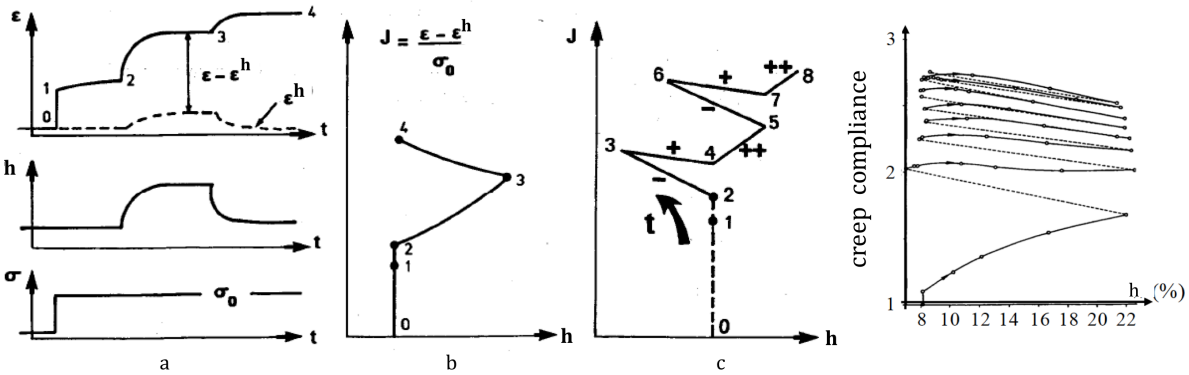

Fig. 1: Construction of mechano-sorptive trajectories: (a) Humidity cycle under constant load; h is moisture content, ε strain and σ stress (b) Corresponding trajectory, relative compliance J versus h; (c) Representation of Ranta-Maunus model; (d) effect of repeated cycles under load according to Hunt (1992), showing the apparent creep/recovery at the creep limit (explained by a modified hygroscopic expansion ε^h).

At about the same period in the 80ties, the alternative 'hygro-locks' theory was proposed by the author (Gril 1988, 1989). The initial aim of this model was to reproduce the features of the (-), (+) and (++) effects as introduced earlier by Ranta-Maunus and confirmed by Hunt's observations. A series of 'boxes' corresponding to increasing m.c. levels contributed to the strain through a spring, either blocked in its current configuration during drying or liberated during wetting. This approach was abandonned for two reasons: first, it was not able to account in a simple way to some loading cases such as m.s. relaxation; second, the success of the explanation given by Hunt for the apparent difference between (-) and (+) situation (pseudo creep/recovery) rendered other interpretations of little use.

A theory developped in the last 15 years by a group of Limoges University, France, offered a new opportunity to investigate the applicability of hygrolocks to wood rheology (Dubois et al 2005). Their approach derived from the observation that when wood humidifies under tensile load, the deformation (corrected for the expansion) increases, whereas when it dries it remains blocked. The elongation can be easily explained by an increase of the elastic compliance with m.c.:

(1) $\varepsilon = J^e(h).\sigma$

In the case of a m.c.decrease, this equation is not applicable, as it would predict a contraction. Instead, an incremental formulation must be used in this case:

(2) $d\varepsilon = J^e(h).d\sigma$

Based on this simple idea, they developped a sophisticated formulation of a 'hygrolocks spring' that

includes the classical features of the +/-/++ cases, and can be combined with time-dependent dashpots (or even sliding frictional elements) to fit with the observed behaviour of wood (Dubois et al 2012). Recently we were able to prove that their model is equivalent to a slightly modified formulation of the original hygrolocks theory (Colmars et al 2014).

In this paper we will introduce various formulations of mechanosorption, including the hygrolock model. Although not limited to 1D formulation, we have here mostly in mind the L direction where the hygroexpansion does not dominate over other sources of deformation, at load levels small enough to avoid permanent damage or maked non-linearity relative to stress.

The mechanosorptive dashpot

In his list of 'requirements' Grossman (1976) insisted that the m.s. effect is time-independent and driven by the moisture content. This led many authors to the use of a 'm.s. dashpot' to describe the m.s. effect:

(2) $d\varepsilon^{ms}/dt = k.\sigma.|dh/dt|$ or: $d\varepsilon/|dh| = k.\sigma$

where ε^{ms} is the m.s. strain, σ the stress, h the moisture content and k a constant that does not need to be given different values in adsorption or desorption; in the case of 2D or 3D formulations, k can be a tensor. The second equation highlights the formal similarity with the time-dependent dashpot: $d\varepsilon/dt = \eta^{-1}.\sigma$ where η is the coefficient of viscosity.

To account for a creep limit, the m.s. dashpot can be associated with a spring in parallel, leading to the 'm.s. Kelvin' element:

(3) $d\varepsilon^{ms}/dt = \mu^{-1}.(J^{ms}\sigma-\varepsilon^{ms})|dh/dt|$ or: $d\varepsilon/|dh| = \mu^{-1}.(J^{ms}\sigma-\varepsilon^{ms})$

where μ is a characteristic moisture range and J^{ms} the m.s. compliance. Such description is commonly associated with a decomposition of the total strain ε:

(4) $\varepsilon = \varepsilon^{h} + \varepsilon^{T} + \varepsilon^{el} + \varepsilon^{ve} + \varepsilon^{ms}$

where ε^{h} is moisture expansion, ε^{T} thermal expansion, ε^{el} elastic strain, ε^{ve} viscoelastic strain and ε^{ms} m.s. strain. In the models actually used to fit real data and to be implemented in numerical codes, ε^{ve} and ε^{ms} can be decomposed in several terms (generalized Kelvin-Voigt), and the constants are given tensorial forms. To account for the reversible pseudo-creep/recovery, the expansion can be written as:

(5) $\varepsilon^{h} = (\alpha - \beta.\varepsilon).(h - h_0)$

where h_0 is the initial moisture constant, α the initial moisture expansion ratio and β a constant.

Alternative representations using stress decomposition have been also proposed (generalized Maxwell). In the case of time-dependent viscoelasticty, parallel or series arrangement of rheological blocks are theoretically equivalent, and can be related to each other through Laplace-Carson transformation. This certainly does not apply to models containing m.s. elements, as they introduce a non-linearity through the coupling between sorption and mechanical actions. Therefore model developers should not hesitate to explore all possible combinations of parallel and series representations in their search for better fitting to the observed behaviour in the widest range of conditions.

A major difficulty with the m.s. dashpot as defined by (2) or (3) is the presence of the term $|dh|$, which is poorly justified theoretically and makes the numerical integration unstable relative to the time

discretization: a quasi stability with humidity fluctuations does not tend to the response at constant humidity when the level of fluctuation vanishes.

The mechanosorptive activation

The time-independent feature of m.s was mostly based on early results such as Schniewind (1966) who compared two drying schedules, slow and rapid but in the same range of magnitude. This question is still a matter of debate, as it is practically very difficult to separate the time-dependency of water sorption and diffusion, from that of mechanical viscosity. As a radically different approach, mechanosorption can be viewed as the acceleration of viscoelastic processes occurring at constant humidity and temperature. The formalism of thermal activation can be used to express this hypothesis. Let consider, for instance, the case of a generalized Kelvin model:

(6) $\varepsilon = \varepsilon^1 + \ldots + \varepsilon^N$; $\sigma = \sigma^1 = \ldots = \sigma^N$; $d\varepsilon^i/dt = (\tau^i)^{-1}.(J^i\sigma^i - \varepsilon^i)$ (i=1..N)

where ε^i, σ^i, J^i, τ^i are the strain, stress, compliance and characteristic time of the i-th link, respectively, and N is the number of links. When only the effect of temperature T is considered like in typical polymers, the principle of time-temperature equivalence can be expressed by Arrhenius equations:

(7) $\tau^i(T) = \tau^i_\infty \exp[W^i/RT]$

where W^i is the activation energy for the link i, R the gas constant and T the absolute temperature. The physical meaning of W^i is the energetic barrier to overcome for configurational changes, while RT represents the thermal energy that allows them. The softening effect of humidity can be modelled by a lower activation energy:

(8) $\tau^i(T, h) = \tau^i_\infty \exp[(W^i - a^i h)/RT]$ $(a^i = cte)$

leading to an equivalence between temperature T, moisture content h and time. To further account for the m.s. activation, one can subtract an additional term from the activation energy:

(9) $\tau^i(T, h, dh/dt) = \tau^i_\infty \exp[(W^i - a^i h - b^i|dh/dt|)/RT]$ $(b^i = cte)$

In other words, the temperature controls the capacity of molecules to overcome energetic barriers, while the humidity (and its variations) controls the height of the barriers.

When the characteristic times τ^i are regularly spaced in a log scale for reference hygrothermal condition, the generalized Kelvin-Voigt model can be used to discretize the compliance spectrum, and equations (8) or (9) result in the dependency of the effective compliance on humidity when observed within a given experimental window: the J^i do not need to depend on h (or dh/dt), just due to τ^i variations the range of links concerned is modified. This type of formulation offers a sounder theoretical basis than the mechanosorptive dashpot, however it does not contain any mechanism leading in a m.s. response proportional to the amount of humidity change, which is what is commonly observed at least approximately. Hanhijärvi (1995) proposed to add a m.s. dashpot in series to each time-dependent dashpot (Fig. 2). Gril (1987) gave

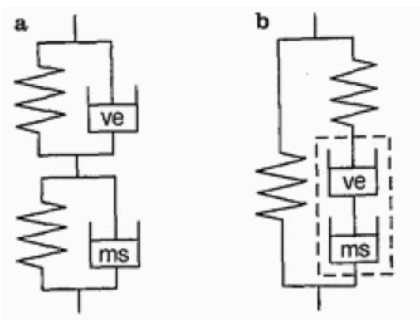

Fig. 2: Concept for describing the relation of viscoelastic (ve) and mechano-soprtive (ms) creep. From Hanhijärvi and Hunt (1998).

another alternative to equation (9), with the drop of τ^i (through that of W) operating for a fixed duration after every change of moisture content by a given amount (Fig. 3).

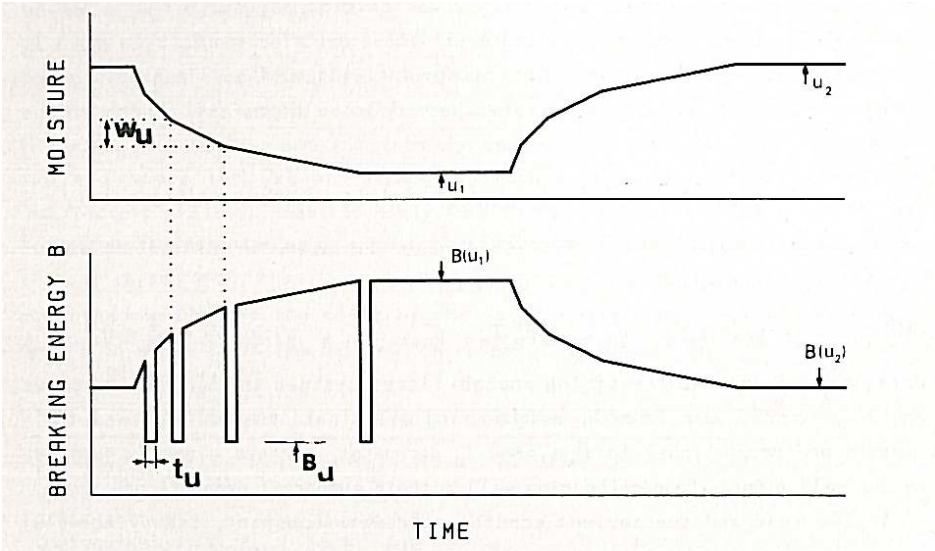

Fig. 3: Effects of a moisture content cycle on the activation energy: (i) direct effect, the energy barrier is higher at low moisture in order to predict a slower creep; (ii) creep activation due non-equilibrium state during drying periods. From Gril (1986)

The hygrolock formulations

Fig. 4: symbol for hygrolock spring as proposed by Husson et al (2010)

The hygrolock theory is based on the 'hygrolock spring' (Fig. 4).

This body can be modelled by a combination of n Hooke springs, each spring k=1...n standing for a bounded moisture domain, a "box", of increasing level through the hygroscopic domain from ovendry to fiber saturation point (Fig. 5). The stress S and strain E applied on the body are the respective sums of the stresses σ_k and strains ε_k of all boxes, linked to each other locally by Hooke's law:

(9) $S = \Sigma\sigma_k$; $E = \Sigma\varepsilon_k$; $\varepsilon_k = J_k\sigma_k$ (k = 1..n)

The boxes are neither disposed in series nor in parallel: the σ_k and the ε_k simply represent internal variables, necessary to control the behaviour of the hygrolock spring . The rules that govern the evolution of these internal variables are detailed in Colmars et al (2014). Only their main features will be evoked here. The moisture content at current time sets the so-called "active box", and the humidity history can be represented by a discrete list of time steps and corresponding value of k. If the wood dries, the next active box become k-1, if it humidifies it becomes k+1, and if the humidity is sufficiently constant it remains k. In case of humidification, the

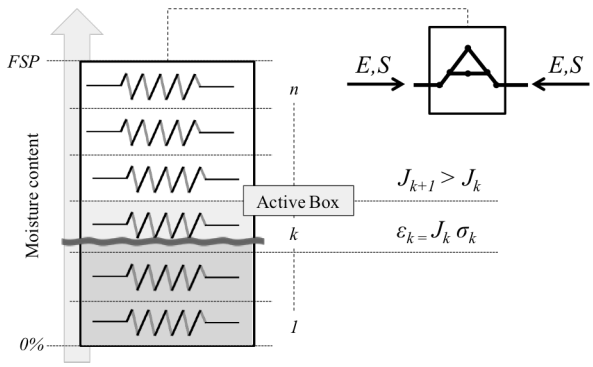

Fig. 5: Schematic representation of boxes within a hygrolock spring. From Colmars et al 2014.

stress in box k is transferred in box k+1, while in case of drying the stress in box k is blocked. In all cases, any change of external stress S is supported by the new active box. As demonstrated in Colmars et al (2014), the hygrolock spring as thus defined is equivalent to the following relation between S and E (Dubois et al 2012):

$$E(t) = \int_{0^-}^{t} J_{max}(t',t).\frac{\partial S}{\partial t}dt' \quad (10)$$

where $J_{max}(t',t)$ means the highest compliance of the material between times t' and t. Fig. 6 illustrates the way the m.s. springs

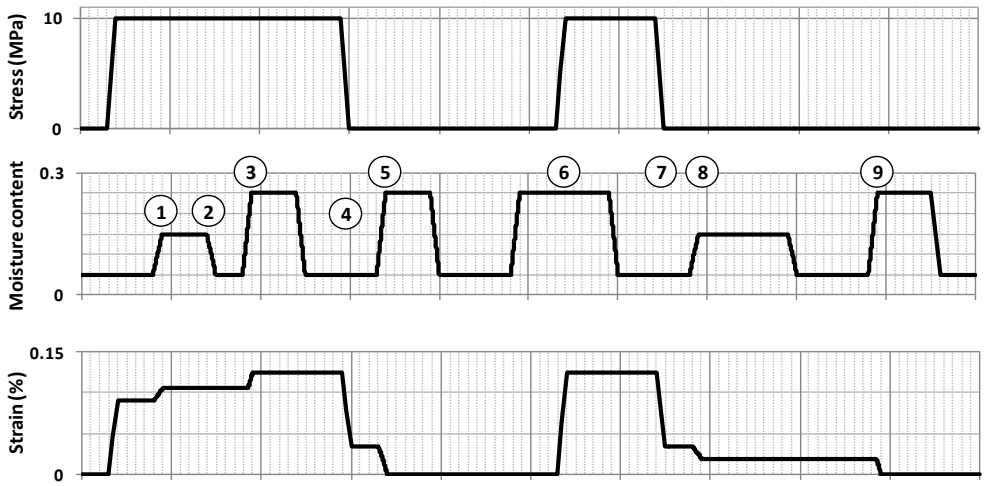

Figure 6: Simulation test of the hygrolock spring. Stress and moisture content cycling is imposed, strain is calculated. Numbers refer to significant events: (1) HygroLock spring is wetted under load, compliance and strain increase. (2) Spring is dried, compliance decreases but strain is blocked; (3) Higher moistening leads to strain increase. (4) Spring is unloaded at low humidity, remaining strain has been blocked during the previous drying. (5) New moistening phases allow to recover strain completely. (6) Now spring is loaded wet. (7) Unloading at dry state ; again strain has been blocked in the upper boxes. (8) Small moistening allows recovering partly residual strain. (9) A new moistening to the condition when loaded allows complete recovery. From Colmars et al 2014.

Hygrolock springs can be combined with dashpots to build generalized Kelvin or Maxwell models (Fig. 7). The only data required to determine the parameter values (the J_k for each hygrolock spring) are creep or relaxation functions at a range of fixed humidity levels. In practice, viscoelastic data at lowest and highest humidity levels are sufficient, together with appropriate interpolation. Hence this type a model is essentially a reformulation of the (visco)elastic relationships, in order to take into account features of the m.s. effect.

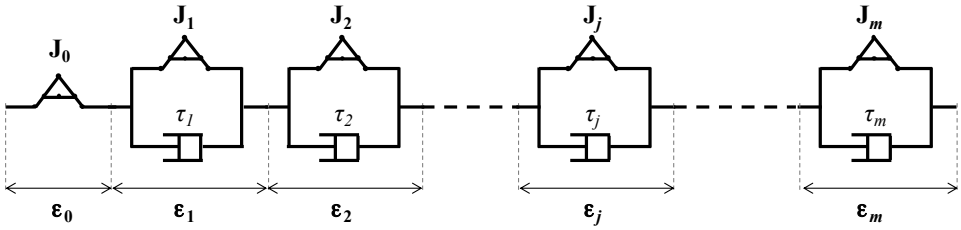

Fig. 7: Hygrolock generalized Kelvin model. Hygrolock spring of compliance distribution $\mathbf{J}_0$ is associated in series with *m* hygrolock Kelvin-Voigt bodies of compliances distribution $\mathbf{J}_j$ and characteristic time τ_j. From Colmars et al 2014.

A simple example of such simulation is shown in Fig. 8.

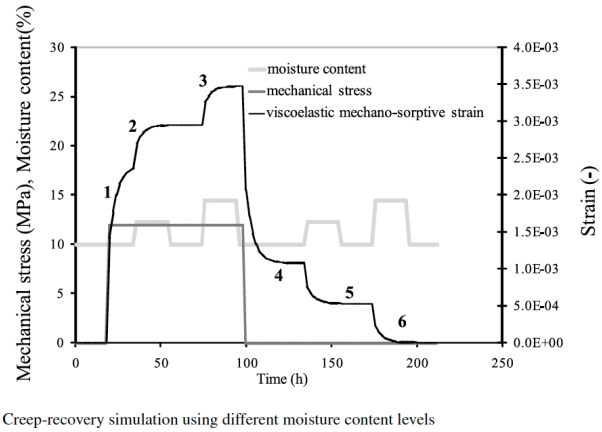

Fig. 8: Simulation of creep-recovery at changing humidity using a viscoelastic hygrolock model. From Dubois et al (2012)

More complex hygromechanical loadings have been considered by Saifouni (2014), who managed to obtain good agreement with experimental data (Fig. 9).

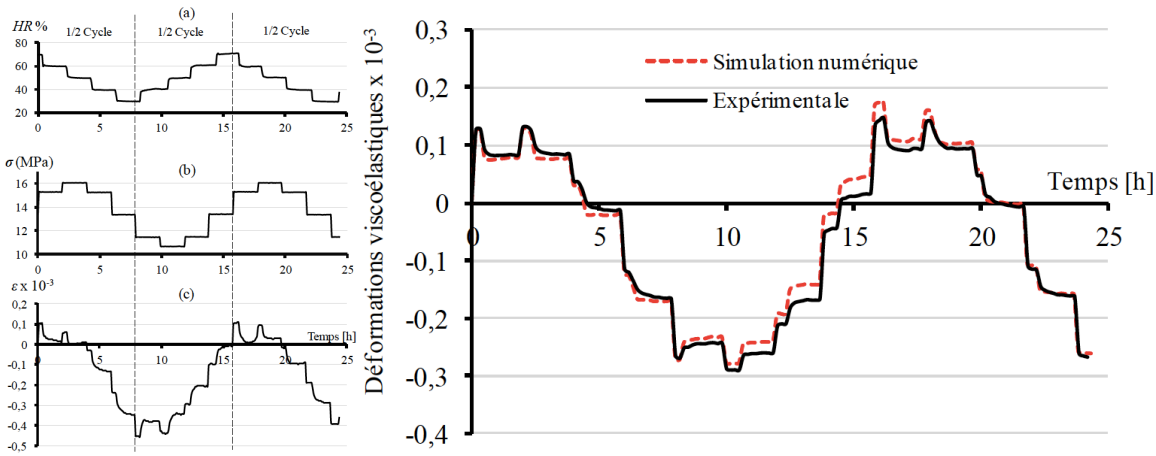

Fig. 9 Simultaneous variation of stress and humidity. Left: Experimental data. Right: comparison of viscoelastic strain calculated from the data (black) and simulated with a hygrolock model (red, dotted line). From Saifouni (2014).

Conclusion

The challenge of a robust description of the hygro-thermo-mechanical behaviour of wood, applicable to a wide range of environmental and loading conditions, still exists after more than 50 years. The practical need for numerical implementation is important but should not prevent us from exploring alternative models that ultimately could better take into account the complexity of the material. Hygrolock models offer a consistent formulation for the dependency of the viscoelastic behaviour on humidity. Without requiring any additional parameter, the produce naturally some features of the m.s. effect. They need to be developped further, especially with regards to 3D hygromechanical loading over a wide range of time scales and temperature and humidity range. It is also important, in order to stimulate the interest of the wood mechanics community, to compare the various types of approach through parallel simulations and comparative experimental data fitting.

References

Colmars J., Dubois F., Gril J. (2014) One-dimensional discrete formulation of a hygrolock model for wood hygromechanics, Mechanics of Time-Dependent Materials, 18(1) : 309-328.

Dlouhá J., Gril J., Clair B., Alméras T. (2009) Evidence and modelling of physical aging in green wood, Rheologica acta, 48 : 333-342.

Dubois F, Randriambololona H, Petit C. (2005) Creep in wood under variable climate conditions: Numerical modeling and experimental validation, Mechanics of Time-Dependent Materials, 9: 173-202.

Dubois F., Husson J.M., Sauvat N. (2012) Modeling of the viscoelastic mechano-sorptive behavior in wood, Mechanics of Time-Dependent Materials, 16(4) : 439-460

Grossman P.U.A. (1976) Requirements for a model that exhibits mechano-sorptive behaviour, Wood Science and Technology 10:163-168.

Grossman P.U.A. (1978) Mechano-sorptive behaviour, in: General constitutive relations for wood and woo-based products, WSF workshop, Syracuse university, 313-325.

Gril J. (1986) A uniaxial model for hygro-thermo-mechanical loadings of wood, in: Thermomechanical Couplings in Solids, IUTAM, Jean mandel Memorial symposium, Paris, 5.9.86, H.D. Bui, Q.S. Son (eds), Elsevier Science (pub.), 263-276.

Gril J. (1988) Une modélisation du comportement hygro-rhéologique du bois à partir de sa microstructure, PhD dissertation, Univ. Paris 6, France.

Gril J. (1989) Hygro-mechanical threshold and memory effects in wood, 39th Annual Meeting of the Japan Wood Research Society, Okinawa, Japan, 4.89, Japan Wood Research Society (Mokuzai Gakkai) (pub.), 244.

Hanhijärvi A., Hunt D. (1998) Experimental indication of interaction between viscoelastic and mechano-sorptive creep, Wood science and technology, 32(1) : 57-70.

Hunt D.G. (1992) Present knowledge of mechano-sorptive creep of wood, Creep in Timber Constructions (a state of the art report), Rilem Technical Committee, 112 : 75-104.

Hunt D.G., Gril J. (1996) Evidence of a physical ageing phenomenon in wood. Journal of materials science letters, 15 : 80-82.

Hunt D.G., Shelton C.F. (1987) Stable-state creep limit of softwood, Journal of Materials Science Letters 6(3) : 353-354

Husson J.M., Dubois F., Sauvat N. (2010) Elastic response in wood under moisture content variations analytic development. Mechanics of Time-Dependent Materials, 142) : 203–217.

Montéro C., Gril J., Legeas C., Hunt D.G., Clair B. (2012) Influence of hygromechanical history on the longitudinal mechanosorptive creep of wood, Holzforschung 66(6) : 757-764

Mukudai J., Yata S. (1986) Modeling and simulation of viscoelastic behavior (tensile strain) of wood under moisture change. Wood Science and Technology 20 : 335-348

Saifouni O. (2014) Modélisation des effets rhéologiques dans les matériaux: application au comportement mécanosorptif du bois, PhD dissertation, Univ. Clermont-Ferrand, France.