a

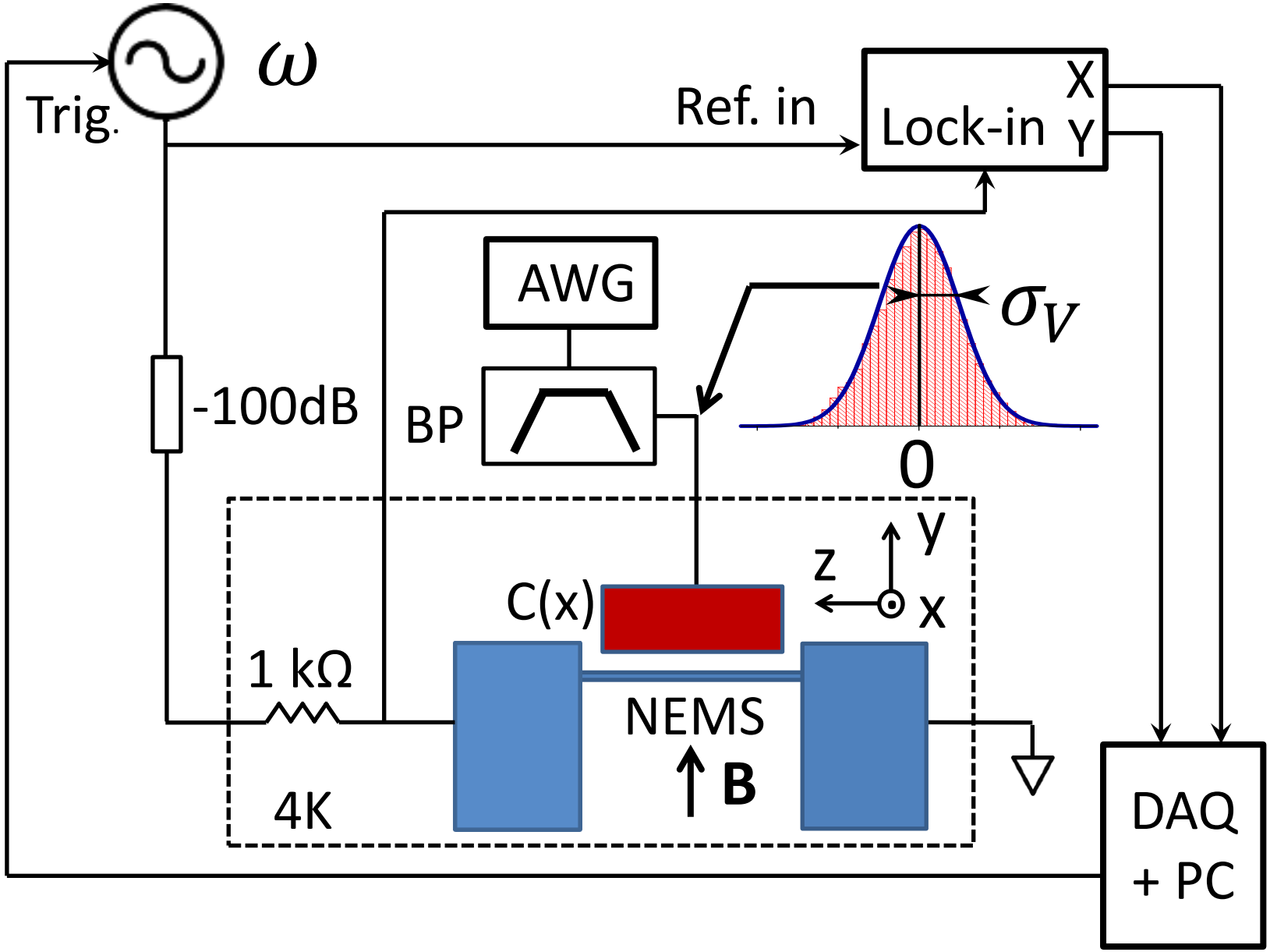
ω
Trig.
Ref. in
Lock-in
X
Y
AWG
BP
-100dB
σ_V
0
y
z
x
C(x)
1 kΩ
NEMS
B
4K
DAQ
+ PC