HAL open science

An example of geometric origami design with benefit of graph enumeration algorithms

David Dureisseix

▶ To cite this version:

David Dureisseix. An example of geometric origami design with benefit of graph enumeration algorithms. 2016. hal-01219814v4

HAL Id: hal-01219814
https://hal.science/hal-01219814v4

Preprint submitted on 24 May 2017

HAL is a multi-disciplinary open access archive for the deposit and dissemination of scientific research documents, whether they are published or not. The documents may come from teaching and research institutions in France or abroad, or from public or private research centers.

L'archive ouverte pluridisciplinaire **HAL**, est destinée au dépôt et à la diffusion de documents scientifiques de niveau recherche, publiés ou non, émanant des établissements d'enseignement et de recherche français ou étrangers, des laboratoires publics ou privés.

Distributed under a Creative Commons Attribution - NonCommercial - ShareAlike 4.0 International License

An example of geometric origami design with benefit of graph enumeration algorithms

David Dureisseix

Univ Lyon, INSA Lyon (France)

Abstract: This article is concerned with an example of complex planar geometry arising from flat origami challenges. The complexity of solution algorithms is illustrated, depending on the depth of the initial analysis of the problem, starting from brute force enumeration, up to the equivalence to a dedicated problem in graph theory. This leads to algorithms starting from an untractable case on modern computers, up to a run of few seconds on a portable personal computer. This emphasizes the need for a prior analysis by humans before considering the assistance of computers for design problems. The graph problem is an enumeration of spanning trees from a grid graph, leading to a coarse scale description of the geometry of the paper edge on the flat-folded state.

Keywords: spanning tree enumeration; NP-hard; planar geometry; complexity; folding; computational origami

1 Introduction

Origami (paperfolding without cutting nor gluing) and especially flat-folded model design, strongly relies on planar geometry. Color-changing technique, using appropriately a paper with one color on a face and a second color on the other face, adds some challenges to the previous model design. The most demanding cases use numerous and alternated color changes on the flat-folded state of the paper, and making a chessboard (or checkered patterns) is among the hardest problems, provided that one adds the constraint of starting from a single square sheet of paper. Indeed, starting from a narrow strip of two-colored paper, or from several separated sheets (a technique known as modular origami), drastically reduces the difficulty of designing a checkered pattern.

Several designs appeared during the past 30 years, see Table 1, and the question of the optimality was settled: to get a $n \times n$ checkered pattern, what is the minimal size of the initial square sheet of paper? In its present general form, this question is still open. Nevertheless, once a design is completed, an upper bound for the optimal initial square sheet size is made available. Some estimates were also given: with the sensible assumption that a color-change always appears

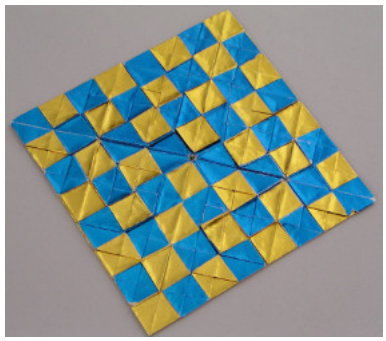

Figure 1: A possibly optimal 8×8 chessboards, from a 32×32 square of paper, after [16].

along a side of the initial square sheet of paper, this leads to the question of the length of a continuous path which is followed by the sides of the initial square sheet of paper on the flat-folded state, called the edge diagram. With such an assumption, the answer was that a half-perimeter $s = n^2$ is required [16], see figure 1. Note that this polynomial complexity is the one of a solution (or the complexity of checking that a folded model is a solution), but not the complexity of finding all the solutions (i.e. of enumerating the solutions, not only counting them).

Publication year	Initial paper size	Author
1985	64×64	Hulme [24]
1989	40×40	Casey [5]
1993	36×36	Montroll [34]
1998	40×40	Kirschenbaum [28]
2000	32×32	Dureisseix [16]
2001	32×32	Chen [7]
2007	32×32	Hollebeke [21]

Table 1: Historical designs of some 8×8 chessboards, after [4].

2009 saw a breakthrough. Alleviating the previous constraint on the edge pattern, an asymptotic sharper bound has been given in [11] together with a general constructive proof. The authors found (for n even): $s = \frac{1}{2}n^2 + 8n + 8 - 5(n \mod 4)$. This bound is nevertheless outperforming the previous designs only for $n > 16$, see figure 2. It also has the seamless property (each square board is made by a continuous paper surface).

Apart from the chessboard problem, another challenge emerged recently on social networks: a design of a pixel matrix [42]. The difference with the pixel project [9] (for which small square modules of two possible different colors are assembled together to form a pixelated image, the pixel unit of Max Hulme [25]) and the modular halftoning [44] lies on the use a single sheet of paper.

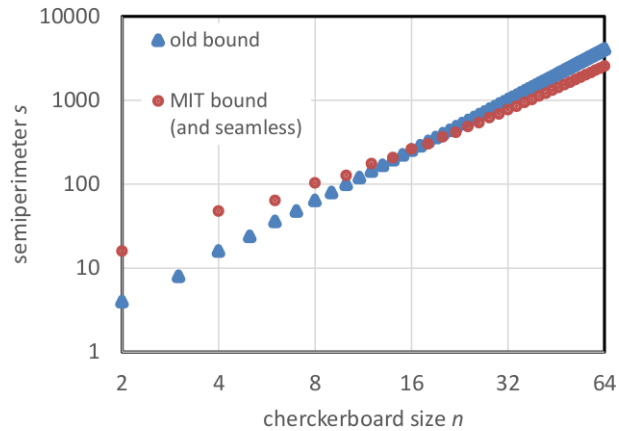

Figure 2: Bounds on complexity for the general problem of the $n \times n$ checkered pattern.

Moreover, as for a LED matrix, each board square should be able to change its color simply (e.g. with a single paper flip) and independently of the others. It appears that the proposed 8×8 pixel-matrix design can be obtained from a rectangular paper (an 8×66 strip is possible, a longer strip renders it easier; it is not known to the author if a shorter one is feasible). Therefore, the challenge of the design of an optimal 8×8 pixel matrix from a square sheet was settled.

This article focus on this last question, together with the possibility of using computers to check the possibilities and to help for designing, as well as the complexity of the associated design algorithms.

2 Flipping mechanism and optimality challenge

The main argument used herein is to reuse the same edge assumption as for the early chessboard: we still rely on the initial paper edge for the color-change, since it still produces the best known paper optimality, at least for the 8×8 design. Furthermore, a second assumption is needed for the flipping mechanism allowing a color-change on each board square independently (and a simple single move); we suggest to design an articulation on the diagonal of the board square. Using a corner or a side of the initial paper square therefore leads to two different folding designs; figure 3 presents the elementary folding mechanisms to generate such flaps. The folded crease allowing each flap has a length of $\sqrt{2}$ and a perimeter length consumption of 2, both for the corner and for the side mechanisms.

The former designs for classical static chessboard also possess some diagonal flaps color-changing square board, but not for all of them. The new design [11] also possess flaps; nevertheless, they are square flaps along a board square edge and are not independent on each board square (changing the overlap order would do the job, but is not considered herein as a simple color-changing mechanism).

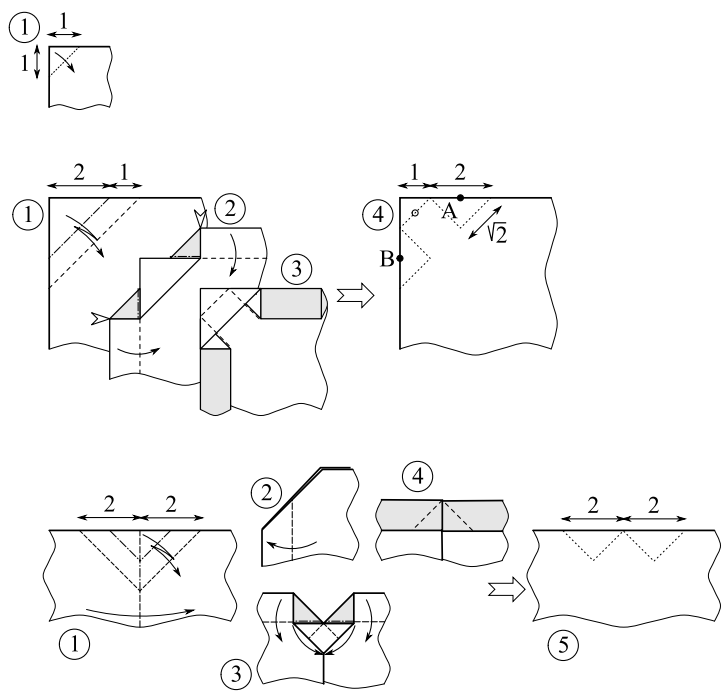

Figure 3: Folding diagrams of some flipping mechanisms. Top: corner (simply flip the color of the corner); middle: corner + edges (1: crimp; 2: reverse; 3: flip the color of the board squares, unfold), bottom: edges (1: crimp; 2: bookfold; 3: swivel folds; 4: flip, unfold).

If this flipping mechanism is feasible, it will therefore require the use of 4 corner mechanisms plus $n^2 - 4$ side mechanisms, leading to a semiperimeter with a minimum length of n^2, that is no more than the straight chessboard. One could therefore challenge that an 8×8 color-changing pixel-matrix can be designed with the same efficiency as for the best 8×8 chessboard, i.e. with a 32×32 square of two-colored paper.

In case of success, this would also exemplify the raise in difficulty by prescribing a design from a *square* sheet of paper. Indeed, the aforementioned strip (8×66 rectangular paper) leads to a mean thickness of the folded model (counted as the average number of superimposed paper layers) to be $t = (8 \times 66)/(8 \times 8) = 8.25$, while for the square paper, it would raise for the hopefully best case to $t = (32 \times 32)/(8 \times 8) = 16$.

3 Design principles for the pixel matrix

To design such a geometric origami model, straight force of computers is not yet sufficient. Indeed, for flat-folding problems, the complexity of the task is very rapidly overwhelming. An underlying basic question concerns the crease pattern, which is the drawing on an unfolded flat sheet of paper of the crease locations as well as their assignments (mountain or valley): given a crease pattern, will it fold flat? This question appeared to be not trivial. Some general conditions can be stated [26] but they are hardly usable in practice; some necessary local constraints around each vertex (i.e. each crease intersection) [22, 14, 1, 17] are nevertheless easier to express, and one could expect relying on computers for running algorithms that could check the foldability. Unfortunately, in their general forms, these problems are hard to solve. For instance, the simple companion problem of layer ordering, even with a given crease assignment, to decide if the model will fold flat is NP-complete [2]. General case is therefore untractable, though some tools are already available to help designing or checking rigid origami foldability, such as `TreeMaker` [31, 32], using circle packing [12], and `Rigid Origami Simulator` [40, 41], using mechanism theory.

Design searching therefore needs for intermediate steps in the genuine problem, that may lead to more amenable solution strategies. The proposal for the pixel-matrix design is to split the problem into simpler subproblems: after the previous design for a flipping mechanism on the paper edge, one could focus on an edge path determination, and on a fold propagation from the edge to the center of the paper.

3.1 Generalized edge pattern and search complexity

With the previous flipping mechanism, a first subproblem concerns the placement on the flat-folded model (i.e. the $n \times n$ chessboard pattern) of the articulation of the flap for each board square. They should split each board square in half along one of its diagonal, and since they are connected to a paper initial edge as in figure 3, the set of all those crease locations should (i) be a continuous

closed curve (it should possess only one closed loop), (ii) without crossing (but touching is allowed) since it should be on the top surface of the folded model, (iii) passing through one diagonal of each of the n^2 board squares. This path could be named generalized edge pattern in reference to its counterpart for the classical chessboard [16].

As a guide for the design, the paperfolder is therefore interested in selecting such a path that could be mapped onto the edge of the initial square sheet of paper. He could also select it with additional considerations such as symmetries (that may allow to reduced the size of the problem), estimates the difficulty of the task, etc. A useful information is therefore the enumeration of all possible paths. This part of the problem is prone to computerization and is discussed in the following.

3.1.1 Brute force approach

Without a deeper analysis, and since the path splits all the board squares in half, but with two diagonal possibilities each time, a crude enumerating approach consists in selecting one of the two possible diagonals per board square, for all the possible configurations, and testing for the aforementioned constraints. This kind of problem is usually not polynomial in time, since the difficulty lies in the number of possible selections of a set of n^2 diagonals: there are $p_1 = 2^{(n^2)}$ sets to test. This number increases rapidly with the size n; Table 2 reports the corresponding values; the 8×8 case seems not to be possible to perform this way[1].

n	p_1	p_2	p_3	N	$\tilde{N}$
2	16	1	1	1	0
4	65 536	16	4	4	0
6	68 719 476 736 ≈ 69 billions	4 096	495	192	11
8	18 446 744 073 709 551 616 ≈ 18 billion billions	16 777 216 ≈ 17 millions	1 307 504 ≈ 1.3 millions	100 352	3 924
10				557 568 000 ≈ 558 millions	

Table 2: Number of cases to generate and test, depending on the problem entry size n.

3.1.2 Path growing approach

A second approach consists of making a non-crossing path grows in a continuous way, by step of one diagonal at a time (called a segment in the following) and exploring all alternatives, i.e. the possible different orientations for the next segment, with backtracking. Due to the closed and continuous characters of the path, not all the diagonal sites are feasible, opportunely reducing the problem

[1] The number of cases is close to the solution of the famous 'wheat and chessboard' problem

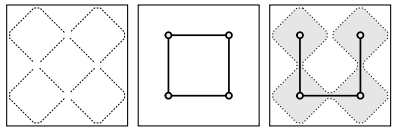

Figure 4: Path location for the generalized edge pattern of the 4×4 pixel-matrix problem, and the corresponding graph. The only solution, but which does not allow any corner placement is also depicted.

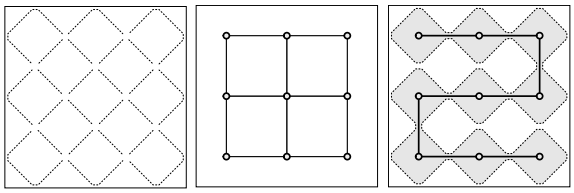

Figure 5: Path location for the generalized edge pattern of the 6×6 pixel-matrix problem, and the corresponding graph. One solution among others is also depicted.

size: corner board squares could be split in only one way (otherwise there is a pending segment at the corner, preventing the path to be continuous), and for an even n (only considered in the following), the constraint propagates to allow only one feasible diagonal per board square. The possible location for the path is depicted for a 4×4 problem in figure 4 (left), for a 6×6 problem in figure 5 (left), and for an 8×8 problem in figure 6 (left). Moreover all the successive segments are connected at right angle. This could be understood as a consequence of the path requirements: if two segments are aligned, the path should also contain a segment going perpendicular at the connection node (to fill all the board edges) see figure 7; this segment should have a pending end-point (it cannot cross the previous sub-path of the two segments); therefore, the path could not be closed.

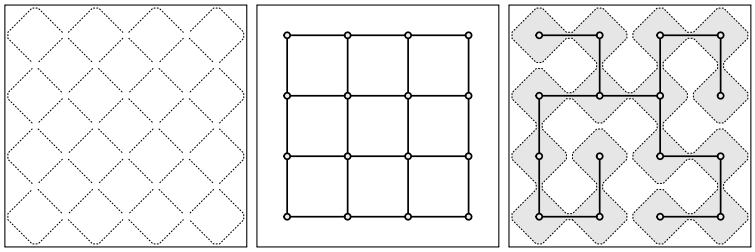

Figure 6: Path location for the generalized edge pattern of the 8×8 pixel-matrix problem, and the corresponding graph. One solution among others is also depicted.

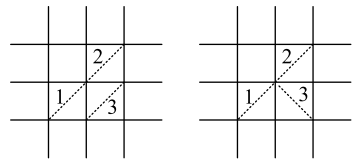

Figure 7: Local connections of the path when segments 1 and 2 are aligned. Left: segment 3 cannot be connected to the previous path of segments 1 and 2 due to its orientation; right: segment 3 with the converse orientation has a pending end point and the path cannot be closed. Conclusion: successive segments 1 and 2 cannot be aligned.

All in all, these criteria reduce the problem to the choice between two connections at each missing point, leading to a number of possibilities of $p_2 = 2^{\left(\frac{1}{2}n^2-n\right)}$. For each, the single-loop constraint should be tested. Though this number still grows rapidly with n, the 8×8 case is now possible to be computerized, see Table 2.

The author programmed an algorithm to solve the path search problem by making the path grows, which is a somehow engineering approach to find a way to get a solution. From the $p_2 = 16\,777\,216$ cases, only 20 826 are single-loop non-crossing paths. Among these last ones, some are symmetric to others, in the symmetry group of the square (dihedral group of order 8). Once eliminating them, the number of solutions reduces to 12 600.

3.1.3 Pathway to the graph theory

Due to the closed, continuous and non-crossing characters of the path, it splits the $n \times n$ square domain in an outer and an interior subdomains. These subdomains are composed by cells that are the union of half diagonal parts of the board squares sharing a corner (called vertex in the following), i.e. squares tilted by 45 degrees; figures 4 and 6 (right) depict these two subdomains in different gray levels. Focusing on the interior gray subdomain, connected by cell corners and whose contour is the searched path, an equivalent graph can be defined. The graph vertices are the aforementioned $\nu = (n/2)^2$ previous vertices, and the arcs relate all the vertices, without loop, containing the connectivity information of the cells. This is therefore a spanning tree of the square grid graph with ν vertices, known to have $\nu - 1$ arcs [43]. The interest of this new problem formulation is to be able to rely on numerous previous works on graphs.

The problem of finding all the possible paths is therefore casted into a spanning tree enumeration. N denotes the number of these spanning trees, and is reported in Table 2. It can be obtained with the Kirchhoff's matrix-tree theorem [27, 6, 15]. For the 4×4 pixel matrix, one gets $N = 4$ (but all are symmetric of the first one — mirroring or rotating — so only 1 spanning tree is interesting, leading to a single solution for the path). This number also increases rapidly with the size of the board: for the 8×8 pixel matrix, one gets $N = 100\,352$.

This is a particular integer sequence known as A007341 [39, 35].

A first approach lies in choosing the arcs of a possible spanning tree between those of the grid graph, and testing for each the nodes involved and the acyclicity. The number of graphs to be tested is then $p_3 = C_e^{\nu-1} = \frac{e!}{(e-\nu+1)!(\nu-1)!}$, where $e = n(n/2-1)$ is the number of arcs of the grid graph, see Table 2.

This approach is nevertheless not the most efficient. There are several available algorithms for enumerating all these trees, and their complexity are increasing as $O(N+\nu+e)$ (and p_3 is known to bound above N)[2]. Few efficient stand-alone implementations have been made available, with the notable exception of the `grayspspan` code of D. Knuth [29, 36] that has been used herein. A graph contains essentially a topogical information, but with the node coordinates for the problem under concern, a geometrical information is available, and allows to detect the trees that are symmetric to an other one, as previously. Once eliminating them, the number of solutions reduces from $N = 100\,352$ to $12\,600$ (indeed, the same as for the previous approach, which is a good cross-check of the implementations).

Traducing the problem in term of graphs has two main effects: first it restate the problem as a more generic one for which more efficient algorithms are available; second it reduces its size since the graph is built on a coarser grid than the path of the paper edge. This second feature is kind of a multiscale problem as it can be seen on figure 6 (right). The involved scales could be quantified by the lengths of the tree and path: for the spanning tree, the length of its $\nu-1$ edges is $2(\nu-1)$ while the length of the generalized edge path is $\sqrt{2}n^2$. The length difference is related to the microscale so that the characteristic scale ratio is $(n^2-\sqrt{2}(\nu-1))/n^2 \geq 1-\sqrt{2}/4 \approx 0.646$ (the asymptotic value for large n). The scales are therefore hardly separable. It would certainly be interesting to be able to find even coarser models to reduce further the size of the problem, but such upscalings are somehow case dependent, and not easy to derive. Once a macroscale spanning tree is found, the unique associated path should be built as a microscale corrugation.

3.2 Corner placement and contraction property

A classical necessary condition for crease patterns design is a contraction property [10, 13]: the set of all fold intersection points should contract from the unfolded stage to the folded one, i.e. the distance between each pair of points should reduce (or be kept constant) during the folding process.

This should therefore apply on the boundary of the square sheet of paper to the generalized folded path. Since many pairs on points are involved (with two possible positions for each flap, the number of distance comparisons for n even is $\frac{19}{2}n^4 - \frac{15}{2}n^2 - 2$), a simplified and weaker (though suspected to be the most constraint part of the problem) necessary condition concerns first the corners of

[2] asymptotically, when n is large, a closed-form expression for N is $e^{(\nu^2 \times 4C/\pi)}$ [38] where $C = 1 - 1/3^3 + 1/5^2 - 1/7^2 \ldots$ is the Catalan constant, so that $N \approx 1.3385^{(n^2)}$ which is indeed an exponential growth, to compare to $p_1 = 2^{(n^2)}$ and $p_2 \approx 1.4142^{(n^2)}$

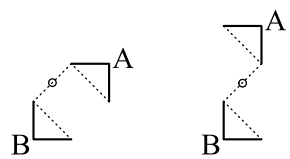

Figure 8: Generalized edge pattern around a corner. Left: feasible path; right: unfeasible path.

the initial square sheet of paper: while the generalized edge pattern of figure 8 (left) is feasible, this is not the case for the one of figure 8 (right). This is a notable difference between the chessboard design [16] and the pixel-matrix design. Indeed, the distance between points A and B on the flat-unfolded state figure 3 (top, step 4) is $d = 2\sqrt{2} \approx 2.83$, while on the flat-folded state of figure 8 (right) it would be $d' = \sqrt{10} \approx 3.16$. However, the paper inextensibility requires a contraction by folding: $d \geq d'$, and since it is not the case, the generalized edge pattern of figure 8 (right) is not feasible for a corner of the initial square of paper.

After building all the non-crossing one-loop continuous path of length n^2 from the spanning trees, one should check if they satisfy the corner placement constraint: there should be at least 4 segments equally spaced on the path whose predecessor and successor are not identically oriented (they may be aligned, but should not have the same orientation, figure 8). Among the feasible cases, the full contraction of the whole edge of the initial square paper could then be checked.

For the 8×8 pixel matrix, among the previous 12 600 paths, this check should be made to eliminate those that do not possess a feasible corner placement. Doing so, only $\tilde{N} = 3\,924$ paths remain, all satisfying the contraction property (hence the strong constraint prescribed by the corner placement). One can also note that for the 4×4 pixel matrix of figure 4, the only feasible path does not have any possible corner placement; consequently the complexity for the semiperimeter is probably greater than $s = 4^2$ in this case (maybe $s = 18$ is also not feasible, but $s = 20$ is somehow easy to fold).

The interest in enumerating all paths with feasible corner placement is to be able to select the a priori simpler or more suited cases. For instance self-symmetry could simplify the design search problem. For the 8×8 pixel matrix, among the previous $\tilde{N} = 3\,924$ paths, 26 possess a vertical or horizontal self-symmetry (none have any other self-symmetry); they are depicted in figure 9, together with the different possible corner placements. It is interesting to note that there are each time 2 possible corner placements, each symmetric to the other, but that none have a single self-symmetric corner placement. As a consequence, and contrary to the straight chessboard case, the problem cannot be reduced by symmetry to part of the board. A second attempt for a potential simplification lies in a spanning tree which is a single line, therefore with only two end points (or leaves). Only 3 solutions with a feasible corner placement

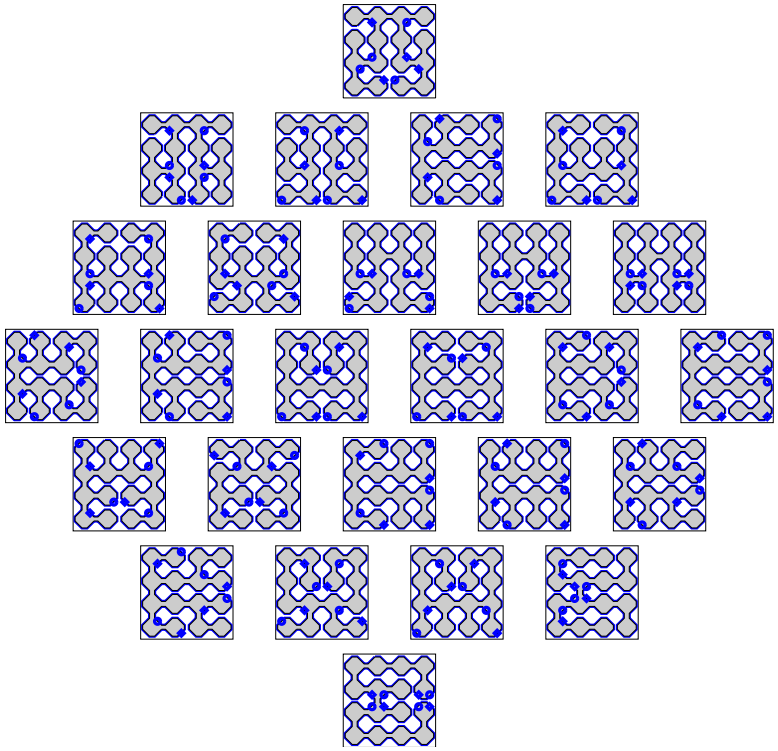

Figure 9: The 26 self-symmetric paths and their corner placement possibilities (denoted by a set of 4 marks along the path).

exist, all being contractive; they are depicted in figure 10.

3.3 Compatible fold propagation

Once a generalized edge pattern has been selected, the last part of the problem is to fold flat a square sheet of paper that maps its edges (and corners) on the pattern. This part is more difficult to formulate in a way that is easily computerizable. Nevertheless, there have been at least two proposals that could lead to a computer help program for this task, up to the author knowledge.

The first one is a systematic search on what could be called a 'lattice origami' pattern [30]. It assumes all the creases lying on a regular pattern on the initial square sheet of paper, consisting of vertical and horizontal creases distant of a unit value, and on the $\pm 45°$ creases diagonalizing all the previous grid squares. They are depicted in figure 11. Such a crease lattice is kind of a discretization of the possible crease pattern family and so, it reduces the problem size and makes it more suitable for a discrete treatment by a computer. Unfortunately, this problem is still too computational demanding to be solved by brute force computing.

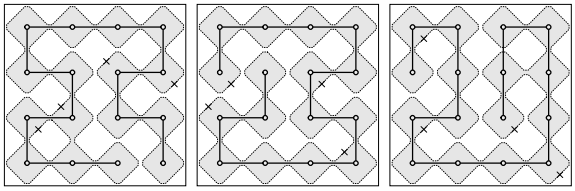

Figure 10: The 3 paths of line spanning tree and their corner placement possibilities (denoted by a set of 4 marks along the path).

The second recent publication on this topic concerns an advance in solving the problem of filling a hole in a crease pattern [13]. One of its instance consists in finding a flat-folded state for an initial polygonal sheet of paper, allowing its boundary to match a prescribed path. This is in practice always possible, and it has been shown that an algorithm can solve this problem in a polynomial time. The only restriction lies in the fact that paper non self-intersecting is not part of the constraints, but it render one confident in the fact that this problem could be solved in reasonable time, though the general algorithm is still an open question.

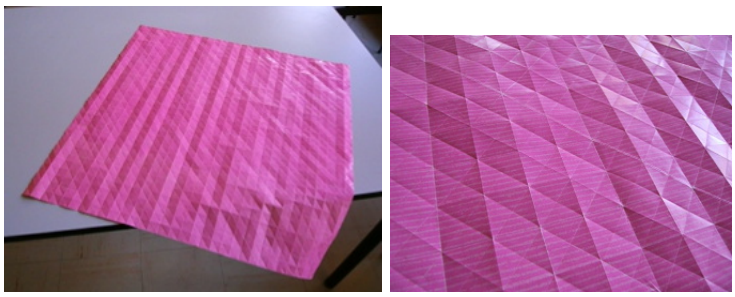

Figure 11: Pre-creasing a 32×32 square paper to make a lattice of creases.

Up to now, with the previously mentioned restrictions, the problem of fold propagation from the generalized edge pattern still relies on the skills and intuition of the paperfolder. Several helping sketches are proposed in the following.

3.3.1 A 2-scale approach?

With the previous graph description of the problem, the multiscale feature could hopefully be used to reduce the difficulty of the current task. Indeed, one could proceed in two steps:

- the fine scale corrugation, using the proposed flipping mechanisms, could be folded on the border of the initial sheet of paper, reducing its size to a smaller flat-folded model.

- this last model could be considered as a sheet of its own, and its smaller perimeter could be mapped on the coarse scale corrugation, i.e. the graph path.

If feasible, this approach has the advantage of separating the scales in this second part of the folding problem. The edge mapping is still an issue, but has to be performed on a reduced-size problem (the coarse problem only).

The main issue relies on the scale separation. Indeed, dealing with discrete geometry, the microscale corrugation constrains the size of the coarse sheet of paper. A side of the flat-folded coarse sheet should provide two half-corner mechanisms and a particular number, say m, of pairs of edge mechanisms. The corresponding side length of the unfolded sheet is therefore $a = 2 \times 3 + 4m$. For a square paper, this length should equals half of the optimal semiperimeter, so $a = n^2/2$. With n even, one gets $2m = n^2/4 - 3$. Nevertheless there is still an issue when starting from a square sheet of paper: since m should be an integer, n should not be a multiple of 4, i.e. $n = 4k + 2$. In this case, $m = 2k(k+1) - 1$. This is feasible for $n = 6$ but not for $n = 8$. When n is a multiple of 4, this won't apply, though an almost-square solution is possible: searching for a rectangular sheet of size $a_1 \times a_2$ with $a_i = 2 \times 3 + 4m_i$, $a_1 + a_2 = n^2$ and say, $n = 4k$, one gets $m_1 + m_2 = 4k^2 - 3$ for which a solution is $m_1 = 2k^2 - 2$, $m_2 = 2k^2 - 1$ and $a_1 = n^2/2 - 2$, $a_2 = n^2/2 + 2$. Therefore, for n being a multiple of 4, the scales are somehow entangled, and prevent the previous solution procedure for a square coarse folded paper. Note also that the almost-square case is always slightly less complex that the square case since the mean thickness is $t = a_1 a_2/n^2 = n^2/4 - 4/n^2$ rather than $t = a^2/n^2 = n^2/4$.

Next section proposes a more direct solution to attempt the design from a square sheet of paper, whose side can be a multiple of 4, as for the 8×8 pixel matrix.

3.3.2 Onion layers strategy for compatible fold propagation

Going back to the initial edge mapping, the problem is at least two-fold: (i) the edge of the square paper should map the selected pattern, and (ii) the tortuosity of this path leads to a 2-scale corrugation on the edge of the paper, that have to be propagated from the edge up to the center of the paper, while keeping the folded state flat.

In addition to using the lattice creases, we now proceed by dealing with successive sub-problems. We propose to cut the paper square in several parts that will have to be re-assembled at the end. If successful, this will lead to a prototype for the model design. The parts are herein successive nested rings lying on perimeters of decreasing sizes, figure 12. The successive problems consist in flat-folding a part, while mapping its perimeter to the internal side of the previously assembled part. Since the perimeter is decreasing, the size of the problem reduces, but a folding compatibility should be satisfied to propagate the folds to the next part to be assembled. If and when the last central square is successfully assembled, the prototype is complete.

Selection of the width of the strips is an interesting issue. The goal is two-fold: each strip should map on the previous edge pattern, and flat-foldability has to be ensured. A thin strip would renders its flat-foldability easy, but do not solve enough foldability compatibility constraints, propagating too much the difficulty to the next inner strip, concentrating progressively the difficulty. Using a large strip allows to solve more progressively this issue but is more difficult to map on the required edge pattern. There is therefore a compromise to be found by choosing accordingly the onion layer width. For the 8×8 pixel matrix problem, a suited choice seems to be the one of figure 12 (right), with a width of 4. The problem is solved once the central 8×8 square has been successfully mapped to the last perimeter.

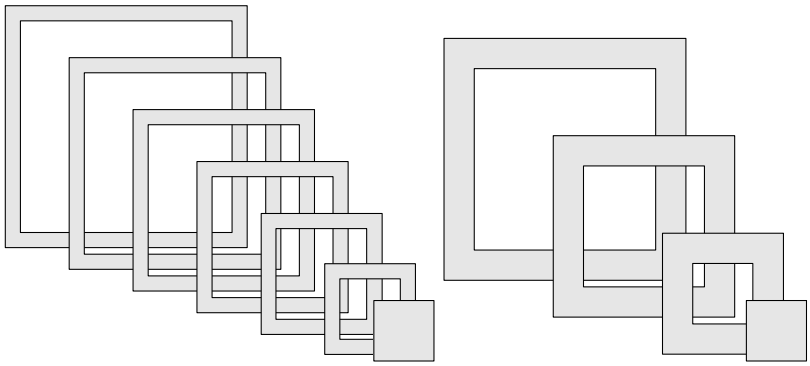

Figure 12: Successive sub-problems with decreasing perimeters, for two choices of width.

A successful prototype is reproduced in figure 13, allowing to conclude that the 8×8 pixel matrix has the same bound on complexity as the chessboard.

Figure 13: An example of a complete prototype.

4 Conclusions

This article sets the pixel-matrix challenge for the point of view of folding optimality, i.e. constraining the design of the given origami model by prescribing an initial paper sheet to be square. This appears to be a strong constraint that drives the complexity of the task. For a checkered $n \times n$ pattern design without transformable color-change (a static pattern), a bound on the semi-perimeter of the initial square of paper was $s = n^2$, having been improved only for n larger than 16. The pixel matrix adds the complex feature of a flipping mechanism allowing the local color-change independently on each board square. Though adding a somehow significant difficulty on the design (traduced here by a complex corner placement), a surprising result leads to the same complexity for the 8×8 design, as for the chessboard.

Concerning the design process, it has been exemplified that the brute force of computers is still unable to tackle problems we wish to solve in flat geometrical origami. The main issue remains the ability for the user to express the considered problem in a suited form, and especially to split it in several well-chosen consecutive sub-problems, some of them being susceptible to be computerized. In any case, a deeper analysis is required to reduce the problem size, and express the problem within known scientific fields (such as graph theory). For the current example, several analysis with increasing depths lead to a succession of problem size reductions. Then the computer can be helpful to provide information on the potential designs. Nevertheless, several steps still hold on intuition and skills of human paperfolder to complete the design. In this sense, the computer may help, but cannot be substituted to the human for this task. This example illustrates the fact that the dramatic announcement of predominance of computer science on employability, when commenting the publication [18] (there are also other predictions with significantly different fractions of automatizable jobs, for instance [8]), could certainly emphasizes the complementary and gain to derive human-computer cooperation, though computers will lack to be autonomous in solving problems that are ill-posed. The human-computer interface will probably be a key issue, and problems need to be translated in computer tackling world; in such a way we indeed need to transform our way of working [3, 37]. Such issues are also discussed about computer science education and learning programs, pros and cons are discussed and currently debated on the utility of early coding courses and/or on recasting traditional courses with a numeric culture orientation, as well as on addressing the issue of the tutor education.

References

[1] Z. Abel, J. Cantarella, E. D. Demaine, D. Eppstein, T. C. Hull, J. S. Ku, R. J. Lang, and T. Tachi. Rigid origami vertices: Conditions and forcing sets. *preprint* `arXiv:1507.01644 [math.MG]`, 2015. `arXiv:1507.01644`.

[2] M. Bern and B. Hayes. The complexity of flat origami. In *Proceedings of the Seventh Annual ACM-SIAM Symposium on Discrete Algorithms*, pages 175–183, Philadelphia, PA, USA, 1996. URL: http://doi.acm.org/10.1145/313852.313918, doi:10.1145/313852.313918.

[3] E. Brynjolfsson and A. McAfee. *The Second Machine Age — Work, Progress, and Prosperity in a Time of Brilliant Technologies*. W. W. Norton & Company, New York, 2014.

[4] P. Budai. Chequered patterns. http://www.budaiorigami.hu/en/chequered. Accessed: 2015-08-29.

[5] S. Casey. Chessboard. In *West Coast Origami Guild*, volume 19, pages 3–12, 1989.

[6] S. Chaiken and D. J. Kleitman. Matrix tree theorems. *Journal of Combinatorial Theory, Series A*, 24(3):377–381, 1978. URL: http://www.sciencedirect.com/science/article/pii/0097316578900675, doi:10.1016/0097-3165(78)90067-5.

[7] S. Y. Chen. Checkerboard. In *Annual OUSA Convention*, pages 72–75, 2001. URL: http://www.origami-usa.org/files/CheckerBoard.PDF.

[8] COE. Automation, digitalisation and employment – volume 1: impacts on job numbers, structure and location. Report summary, Conseil d'Orientation pour l'Emploi – Employment Advisory Council, January 2017. URL: http://www.coe.gouv.fr/IMG/pdf/310117_COE_-_Summary_Report_Automation_and_Employment.pdf.

[9] V. Cumareshan. Pixel project at BOS 40th Anniversary Convention 2007 (Cambridge). https://www.flickr.com/photos/childofsai/1435876202, https://www.flickr.com/photos/childofsai/1435874226/in/set-72157602149411581, September 6-9 2007. Accessed: 2015-08-29.

[10] B. Dacorogna, P. Marcellini, and E. Paolini. Lipschitz-continuous local isometric immersions: Rigid maps and origami. *Journal de Mathématiques Pures et Appliquées*, 90(1):66–81, 2008. URL: http://www.sciencedirect.com/science/article/B6VMD-4RY8STC-4/2/bac280f33fd27f6dba8a6cd4d1ada911, doi:DOI:10.1016/j.matpur.2008.02.011.

[11] E. D. Demaine, M. L. Demaine, G. Konjevod, and R. J. Lang. Folding a better checkerboard. In Y. Dong, D.-Z. Du, and O. Ibarra, editors, *Algorithms and Computation*, volume 5878 of *Lecture Notes in Computer Science*, pages 1074–1083. Springer Berlin Heidelberg, 2009. doi:10.1007/978-3-642-10631-6_108.

[12] E. D. Demaine, S. P. Fekete, and R. J. Lang. Circle packing for origami design is hard. *preprint* `arXiv:1008.1224 [cs.CG]`, 2010. arXiv:1507.01644.

[13] E. D. Demaine and J. S. Ku. Filling a hole in a crease pattern: Isometric mapping from prescribed boundary folding. *CoRR*, abs/1410.6520, 2014. arXiv:1410.6520.

[14] E. D. Demaine and J. O'Rourke. *Geometric Folding Algorithms: Linkages, Origami, Polyhedra*. Cambridge University Press, New York, NY, USA, 2008.

[15] M. Desjarlais and R. Molina. Counting spanning trees in grid graphs. In *Congressus Numerantium – 31st Southeastern international conference; Combinatorics, graph theory and computing*, volume 145, pages 177–185, 2000.

[16] D. Dureisseix. Chessboard. *British Origami*, 201:20–24, 2000. URL: https://hal.archives-ouvertes.fr/hal-01380815.

[17] T. A. Evans, R. J. Lang, S. P. Magleby, and L. L. Howell. Rigidly foldable origami gadgets and tessellations. *Royal Society Open Science*, 2:150067, 2015. URL: http://www.researchgate.net/publication/281845234, doi:10.1098/rsos.150067.

[18] C. B. Frey and M. A. Osborne. The future of employment: how susceptible are jobs to computerisation. *Retrieved September*, 7:2013, 2013.

[19] E. Gjerde. *Origami Tesselations – Awe-Inspiring Geometric Designs*. A K Peters, Ltd.

[20] S. Grabarchuk. The origami checkerboard puzzle. http://www.ageofpuzzles.com/Puzzles/OrigamiCheckerboardPuzzle/OrigamiCheckerboardPuzzle.htm, 2008. Accessed: 2016-10-12.

[21] G. Hollebeke. Échiquier. *Le Pli*, 107-108:8–13, 2007. In French.

[22] T. Hull. The combinatorics of flat folds: a survey. In T. Hull, editor, *Origami 3 – Proceedings of the Third International Meeting of Origami Science, Mathematics, and Education*, pages 29–37. A K Peters, 2002. Also available on `arXiv:1307.1065 [math.MG]`. URL: http://arxiv.org/abs/1307.1065v1.

[23] Thomas Hull. *Project Origami – Activities for Exploring Mathematics*. CRC Press, 2nd edition, 2013.

[24] M. Hulme. Chess sets. In *BOS Booklet*, number 7. BOS, 1985.

[25] M. Hulme. Pixel unit. In Yamaguchi Makoto, editor, *Origami Tanteidan Magazine*, volume 18, pages 171–172, Tokyo, Japan, 2012. Japan Origami Academic Society (JOAS), Nishikawa Seiji. 18th convention booklet.

[26] J. Justin. Towards a mathematical theory of origami. In K. Miura et al, editor, *Origami Science and Art: Proceedings of the Second International Meeting of Origami and Scientific Origami*, pages 15–29, 1997.

[27] G. Kirchhoff. Über die auflösung der gleichungen, auf welche man bei der untersuchung der linearen verteilung galvanischer ströme geführt wird. *Poggendorfs Annalen für der Physik und der Chemie*, 72:497–508, 1847. English translation by J. B. O'Toole, On the solution of the equations obtained from the investigation of the linear distribution of galvanic currents, IRE Trans. on Circuit Theory, CT-5:4-7, 1958. doi:10.1002/andp.18471481202.

[28] M. Kirschenbaum. Chessboard. *The Paper*, 61:24–30, 1998.

[29] D. E. Knuth. *The Stanford GraphBase, A platform for combinatorial computing*. ACM Press, 1993.

[30] G. Konjevod. Integer programming models for flat origami. In R. J. Lang, editor, *Origami 4 – Fourth International Meeting of Origami Science, Mathematics and Education*, pages 207–216. A K Peters, 2009.

[31] R. J. Lang. TreeMaker. http://www.langorigami.com/science/computational/treemaker/treemaker.php. Accessed: 2015-08-29.

[32] R. J. Lang. A computational algorithm for origami design. In *Computational Geometry: 12th Annual ACM Symposium*, pages 98–105, Philadelphia, Pennsylvania, 1996.

[33] D. Mitchell. *Paperfolding Puzzles*. Kendal, United Kingdom, 2nd edition, 2011.

[34] J. Montroll. *Origami inside-out*. Dover, 1993.

[35] OEIS Foundation Inc. The on-line encyclopedia of integer sequences. Number of spanning trees in n x n grid. http://oeis.org/A007341, 2011. Accessed: 2015-08-29.

[36] SGB. The Stanford GraphBase. http://www3.cs.stonybrook.edu/~algorith/implement/graphbase/implement.shtml. Accessed: 2015-08-29.

[37] M. Shanahan. *The Technological Singularity*. MIT Press, 2015.

[38] R. Shrock and F. Y. Wu. Spanning trees on graphs and lattices in d dimensions. *Journal of Physics A: Mathematical and General*, 33:3881–3902, 2000. Also available on arXiv:cond-mat/0004341 [cond-mat.stat-mech]. doi:10.1088/0305-4470/33/21/303.

[39] N. J. A. Sloane and S. Plouffe. *The Encyclopedia of Integer Sequences*. Academic Press, 1995.

[40] T. Tachi. Rigid Origami Simulator. http://www.tsg.ne.jp/TT/software. Accessed: 2015-08-29.

[41] T. Tachi. Simulation of rigid origami. In *Fourth International Conference on Origami in Science, Mathematics, and Education (4OSME)*, pages 175–187, 2009.

[42] H. Tahir. Origami dot-matrix. https://www.flickr.com/photos/31897685@N06/16726050538. Accessed: 2015-08-29.

[43] W. T. Tutte. *Graph Theory*. Cambridge University Press, 2001.

[44] Z. Xiao, R. Bosch, C. S. Kaplan, and R. J. Lang. Modular origami halftoning: Theme and variations. In McKenna D. K. Delp, C. S. Kaplan and R. Sarhangi, editors, *Proceedings of Bridges 2015: Mathematics, Music, Art, Architecture, Culture*, pages 61–68, Phoenix, Arizona, 2015. Tessellations Publishing. Available online at http://archive.bridgesmathart.org/2015/bridges2015-61.html.

A Some pixel matrix designs

For a $n \times n$ static checkerboard, the optimality argument (satisfied for $n < 16$) states that the smallest square of paper has a semiperimeter $s = n^2$ for an even n. The following examples illustrate the feasibility of the same bound for the pixel matrix.

A.1 The 2×2 pixel matrix

The 2×2 pixel matrix is obtained with a single design from a 2×2 square of paper, following figure 14. It is nevertheless somehow disappointing since the lack of wasted paper does not allow to provide additional underlying paper when folding the corners. This is an edge effect that can be discarded but with the price to use a sub-optimal 4×4 paper (whose design is left to the reader).

A 2×2 checkered board in [11] uses a 3×3 paper, but cannot flip its color easily. The design of appendix B.1 can, but still have an edge effect defect of 1 board square. Therefore, it is unlikely that a design without such edge effect can be folded with a square paper smaller than 4×4.

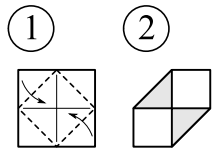

Figure 14: The optimal 2×2 pixel matrix, from a 2×2 square of paper.

A.2 4×4 pixel matrix

The 4×4 pixel matrix cannot be obtained with a square whose semiperimenter is $s = 4^2 = 16$, i.e. with a 8×8 square paper. There are several possible designs from a 10×10 paper; one is depicted in figure 15.

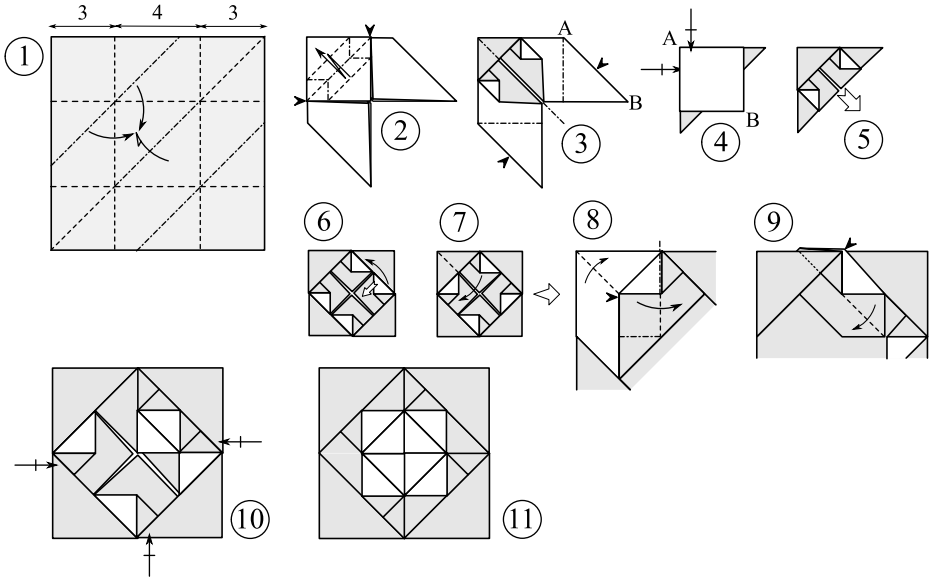

- Step 1: from a 10×10 grid, collapse the 'preliminary-like' folds.
- Step 2: repeat backwards.
- Step 3: open and refold on the second diagonal.
- Step 4: repeat step 2 on both faces.
- Step 5: half open.
- Step 6: render the model central-symmetric.
- Step 7: book fold.
- Step 8: reverse and book fold back.
- Step 9: reverse and sink.
- Step 10: repeat three times the sequence of steps 7-9.

Figure 15: The possibly suboptimal 4×4 pixel matrix, from a 10×10 square of paper.

A.3 6×6 pixel matrix

There are solutions for a 6×6 pixel matrix form a seminperimeter $s = 6^2 = 36$, i.e. with a 18×18 square of paper. A design with a central symmetry is depicted in figure 5 and is a solution of the previous sub-problem of finding a path in a coarse graph. This step can be seen as a macroscopic problem while the detailed flipping mechanism folding for color-changing is a microscopic corrugation along the paper edge.

Finding the complete folding sequence can then be studied by at least two means:

- propagating the folds from the edge once mapped on the targeted final folding state (the edge diagram);
- using a two-scale approach.

This last case may well be available, at least for even n of the form $n = 2(2k-1)$ with an integer k (so that $n = 2, 6, 10, 14 \ldots$). Indeed, for this case, the flipping mechanisms can be folded flap to a 'coarse' square configuration of edge length $c = (n/2)^2 + 1$. Then one can search for designing a folding sequence of this $c \times c$ square as a whole, mapping its 'coarse' perimeter on a dedicated edge pattern built from the previous spanning tree (figure 16). If this pseudo $c \times c$ square can be folded this way, then the problem is fully separated on the two scales. Whether this is a general property for any n or not is still an open question.

For the $k = 2, n = 6, s/2 = 18, c = 10$ case, the 'coarse' problem is not too complex, using the central symmetry of the design, but cose not fully statisfy to the lattice origami principle. Indeed one issue is a shift of value 2 in figure 16 (step 3) leading to a 'shearing' of the square. A twist fold can be made as for some tesselation designs [19, 23], than involves an angle α with $\tan \alpha = 2/6 = 1/3$ that cannot lie on the (0, 45°, 90°) $c \times c$ regular grid.

Figure 17 provides a folding sequence. Note that for this coarse model, there is some paper self-intersection in the vicinity of point A at step 2e, when repeating the sequence on the half-bottom part (to avoid this, the book fold of step 2e is mandatory). This cannot be solved at the only coarse scale, and is postponed to the complete pixel-matrix folding sequence, leading to conclude that the two scales may well be not fully separable.

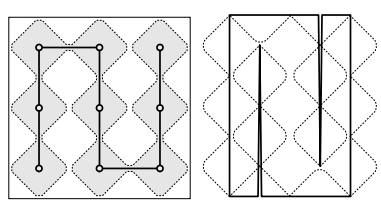

Figure 16: A path location for the generalized edge pattern of the 6×6 pixel-matrix problem, and the corresponding coarse edge location of length $4c = 40$ supporting the fine corrugation.

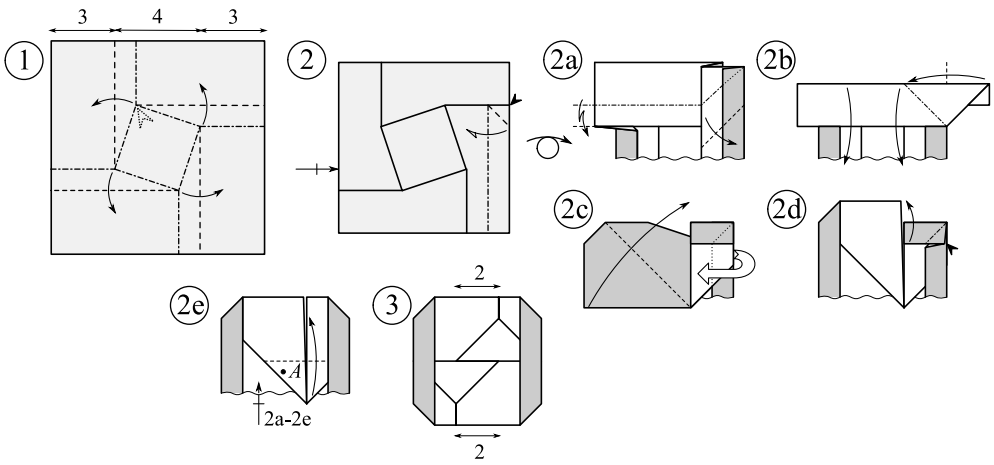

- Step 1: twist fold.
- Step 2: fold behind. Turn the model.
- Step 2a: complex pleat, pivoting right part.
- Step 2b: unfold and swivel fold.
- Step 2c: book fold. Rever inside flap outside.
- Step 2d: squash fold.
- Step 2e: fold the flap to avoid subsequent interference. Repeat previous steps at the bottom.

Figure 17: The coarse folding of a 10×10 square to a 6×6 pattern intended to be the coarse pixel-matrix.

B Some static checkered boards

Note for completion, that there is a series of origami puzzles based on checkered patterns, willing to obtain the smallest number of folds [20, 33] whereas we are herein interested in the smaller waste of paper. For a $n \times n$ static checkerboard, the optimality argument (satisfied for $n < 16$) states that the smallest square of paper has a semiperimeter $s = n^2$ for an even n, and $s = n^2 - 1$ for an odd n. Some designs are given in the following sections. One can note that there is a constructive proof of the previous bounds for s; indeed, a recursive construction is given in the last following sections.

B.1 2×2 checkered board

As previously mentioned, the 2×2 case can be folded from a sub-optimal 3×3 paper [16], figure 18.

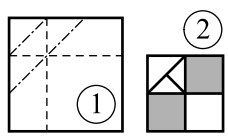

Figure 18: The suboptimal 2×2 checkerboard, from a 3×3 square of paper.

B.2 3×3 checkered board

Following the technique of the edge diagram, the 3×3 checkered board requires a semiperimeter of 8, so a 4×4 square sheet of paper. There are 3 possible corner placements, one of them leading to the folding sequence of figure 19.

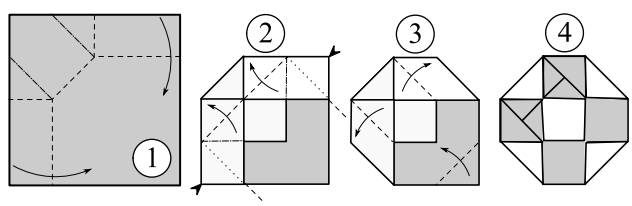

- Step 1: from a 4×4 grid, fold along the crease pattern.
- Step 2: two swivel folds.
- Step 3: color change.

Figure 19: The optimal 3×3 static checkerboard, from a 4×4 square of paper.

It is also disappointing since the lack of wasted paper does not allow to provide additional underlying paper when folding the corners. This is an edge

effect that can be discarded but with the price to use a sub-optimal 5×5 paper [16], figure 20.

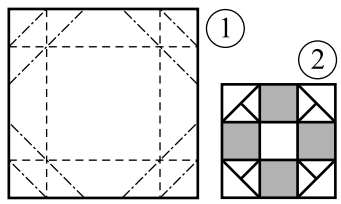

Figure 20: The sub-optimal 3×3 static checkerboard, from a 5×5 square of paper.

B.3 4×4 checkered board

The optimal case here corresponds to a 8×8 square paper. This is the first checkerboard that allows to avoid edge effects while being optimal. A compact folding sequence of the original design of Max Hulme [24] is depicted in figure 21.

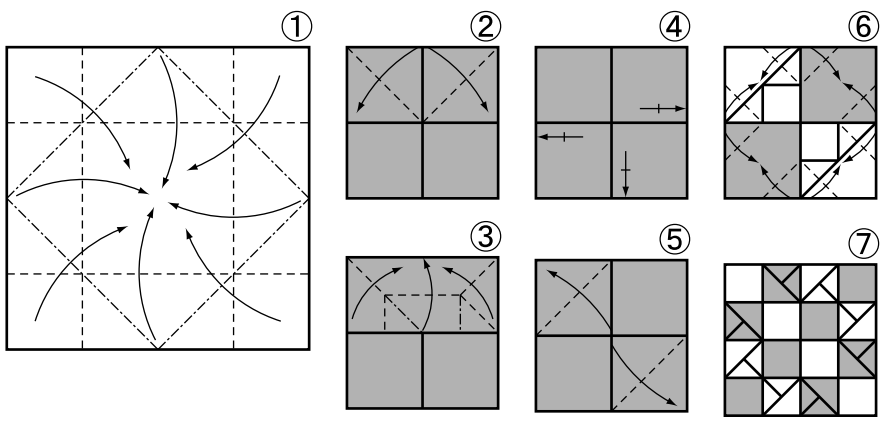

- Step 1: collapse with preliminary folds.
- Step 2: open one layer.
- Step 3: fold back.
- Step 4: repeat three times (care of the symmetry of the model).
- Steps 5 and 6: bookfolds for color change.

Figure 21: The optimal 4×4 static checkerboard, from a 8×8 square of paper.

B.4 5×5 checkered board

The optimal case corresponds to a 12×12 square paper. figure 22 proposes a solution.

Finally, a geometric picture (with the checker edges $3^2 + 4^2 = 5^2$ and their optimal square edges $4 + 8 = 12$) allows to illustrate the Pythagorean theorem, together with the puzzle-like proof of Da Vinci, figure 23.

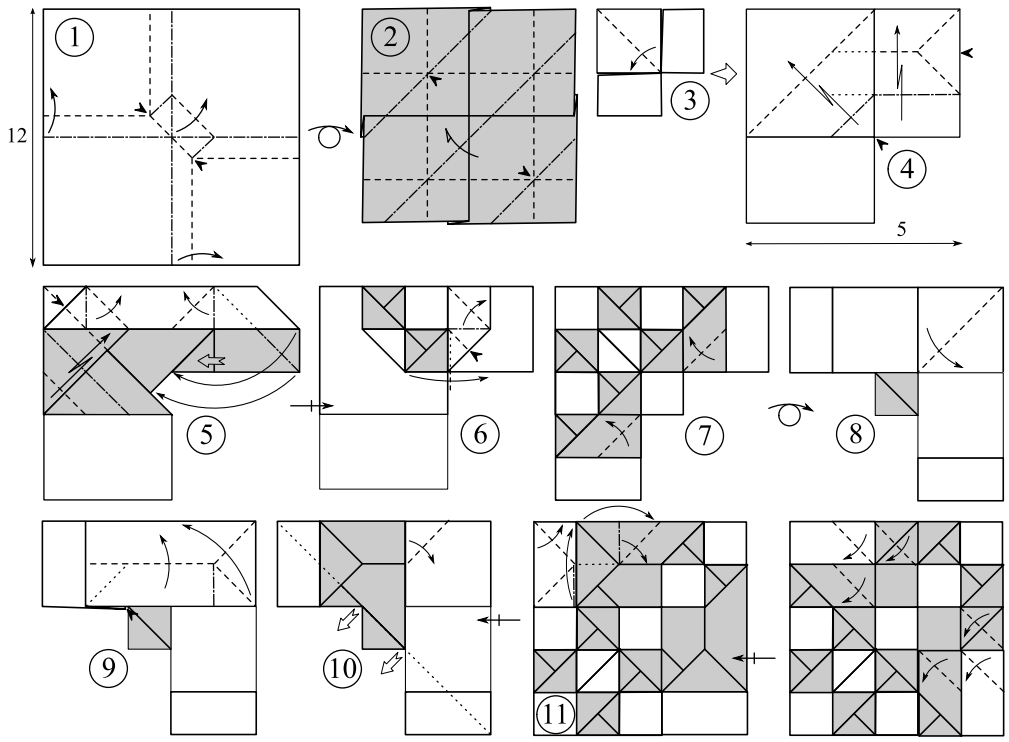

- Step 1: fold the 12×12 paper. Turn the model.
- Step 2: distorted preliminary-like base.
- Step 3: fold the flap.
- Step 4: 2 coupled squashes.
- Step 5: squash and crimp on the left; swivel on the right.
- Step 6: swivel; repeat steps 3-6.
- Step 7: flip for color change. Turn the model.
- Step 8: fold the flap.
- Step 9: fold.
- Step 10: flip for color change; repeat steps 8-10. Unfold the back face along main diagonal.
- Step 11: 2 couples swivels.
- Step 12: flip for color change.

Figure 22: The optimal 5×5 static checkerboard, from a 12×12 square of paper.

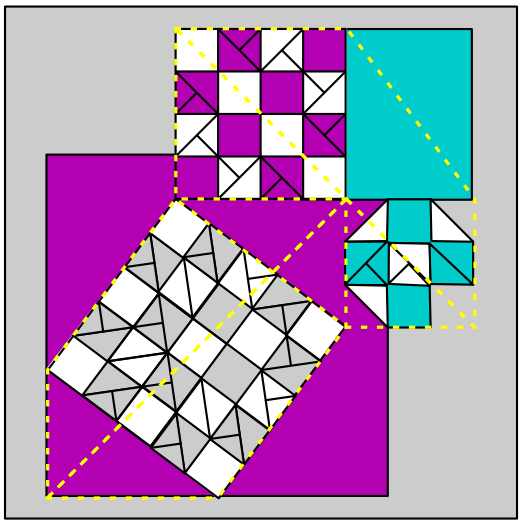

Figure 23: The Pythagorean theorem with its proof-without-word of Da Vinci.

B.5 8×8 chessboard

The following model has been published in [16] and produces a 8×8 chessboard from a 32×32 square of paper. It is therefore expected to be optimal. The folding sequence of figures 24 and 25 is:

- Step 1: pre-crease the 1/16th. Waterbomb-base folds.
- Step 2: rotate to lock. Turn over.
- Step 3: bring edges again toward center.
- Step 4: sink.
- Step 5: book fold. Repeat steps 4-5.
- Step 6: petal fold. Repeat.
- Step 7-8: fold flaps. Here is a 2×2 pattern.
- Step 9: squash and swivel together.
- Step 10: petal fold (note the dissymmetry of the fold).
- Step 11: open sink on the left. Reverse fold on the bottom.
- Step 12: open sink again on the left. Same fold as in step 9 on the right.
- Step 13: squash-swivel on the left. Same fold as in step 10 on the right.
- Step 14: same fold as in step 9.
- Step 15: same fold as in step 10.
- Step 16: color change. Repeat steps 8-16 according to symmetries.
- Step 17: here is now a 4×4 pattern. Re-fold wider.
- Step 18: color change. Repeat steps 17-18 everywhere needed.

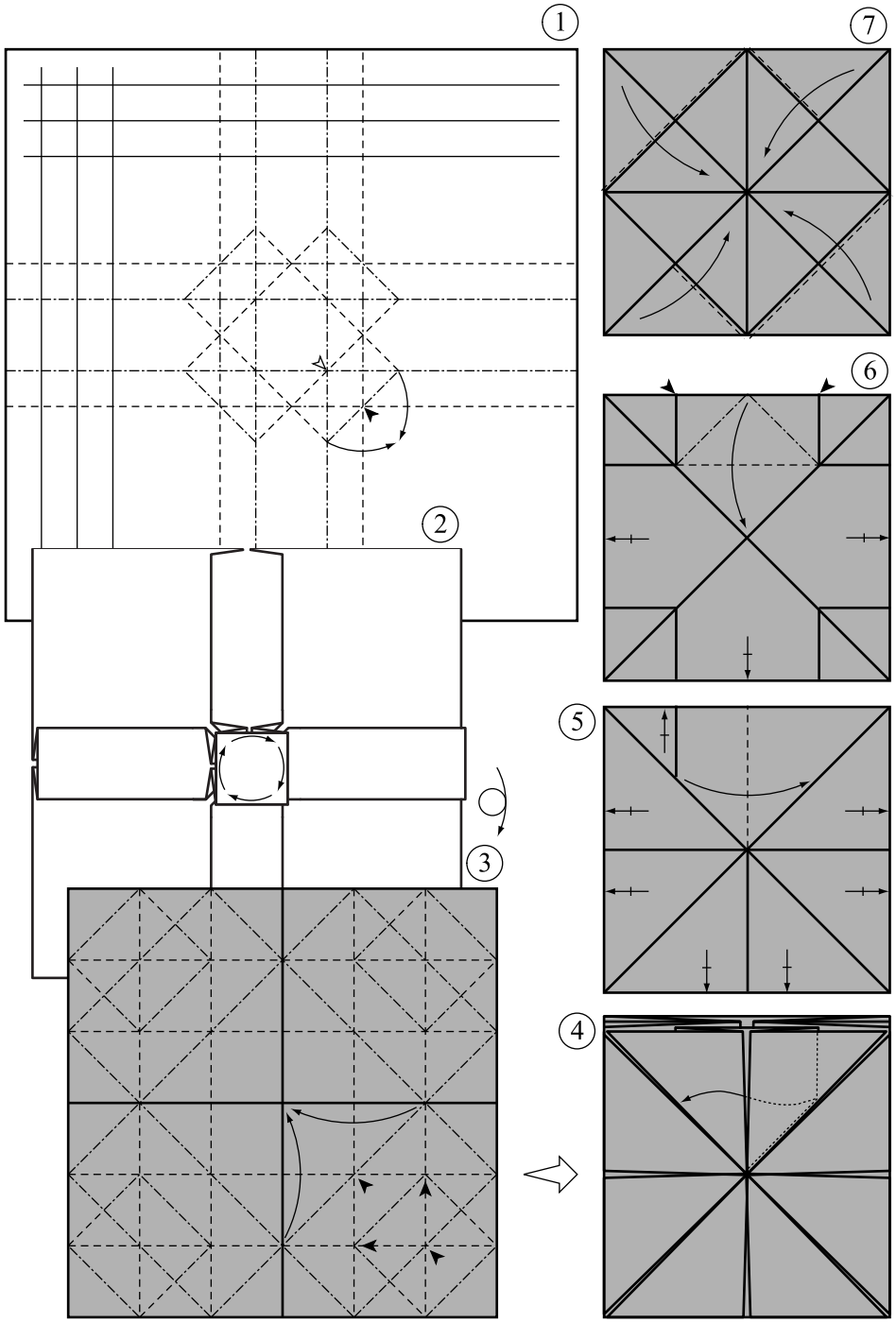

Figure 24: The optimal 8×8 static chessboard, from a 32×32 square of paper.

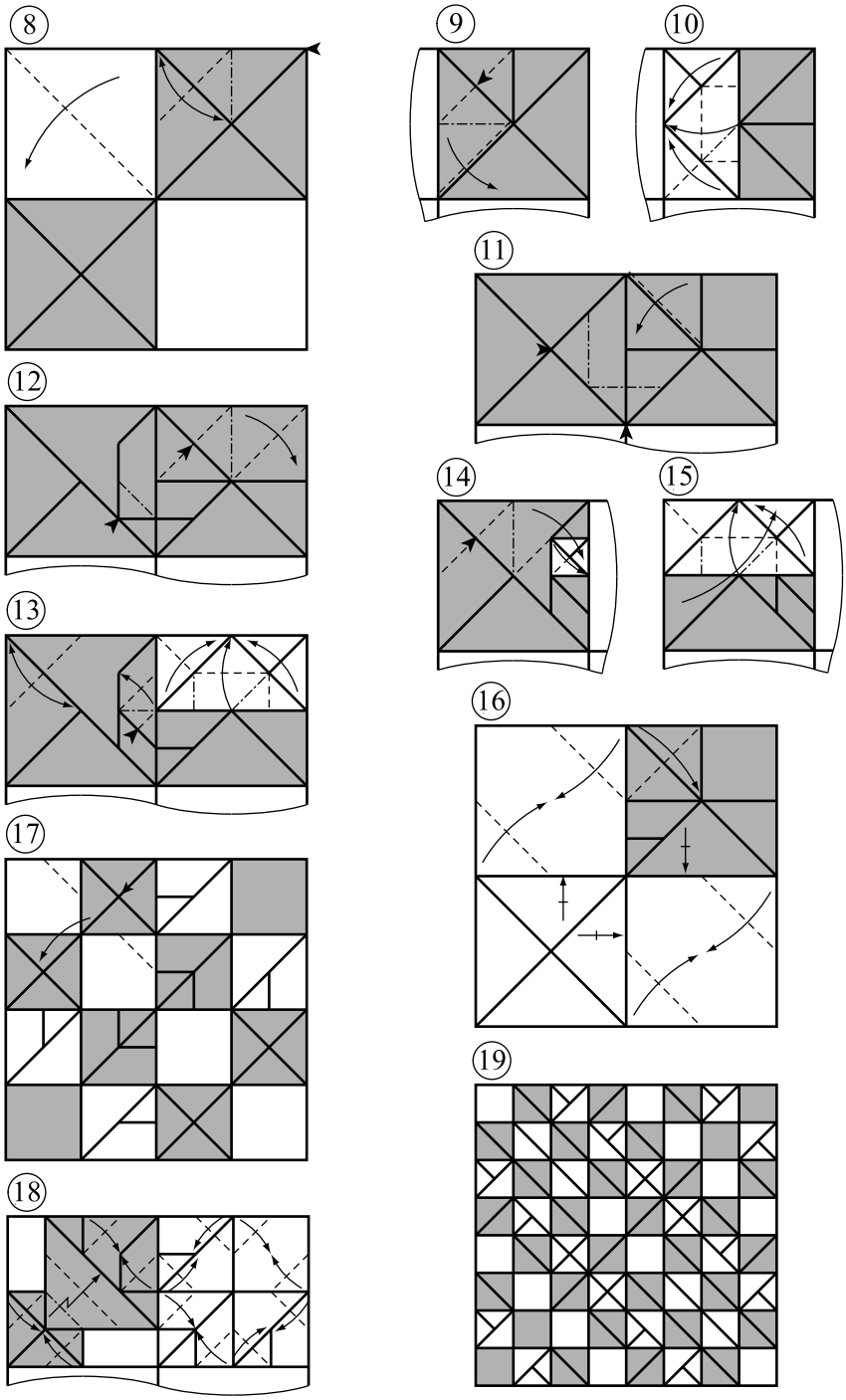

Figure 25: The optimal 8×8 static chessboard, from a 32×32 square of paper. Continued.

B.6 Generic construction of an $n \times n$ checkerboard

A generic folding sequence can be built for a general $n \times n$ checkerboard. The design is not the most elegant, but it can be extended to any number $n \geq 5$. The folding sequence relies of a strip circulating on the folded model than leads to a 'dendritic-like' edge pattern, depicted in figure 26 for $n = 8$ and $n = 7$ cases.

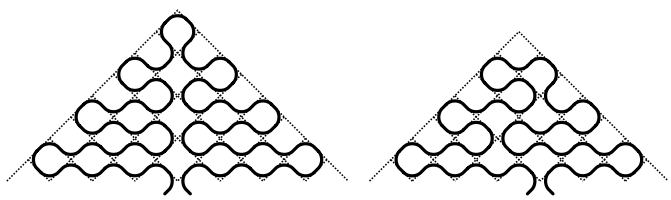

Figure 26: Edge diagrams for $n = 8$ and $n = 7$ (half top parts only).

The $n = 2p$ even case has two symmetries with respect to the diagonals of the board. The sequence is the repetition of a generic sub-sequence, which is described in figure 27.

The odd case is more difficult than the even case since it possess less symmetries, and is described herein. The sequence is also the repetition of a generic sub-sequence, except for the last stage that leads to complete a $n = 5$ half checkerboard which is of particular design as a kind of edge effect. This special 5×5 is depicted in figure 28, and the constructive proof in figure 29.

Following this process, a 11×11 checkerboard has been folded that is probably the largest optimal checkerboard that has been effectively folded. It is photographed in figures 30 and 31.

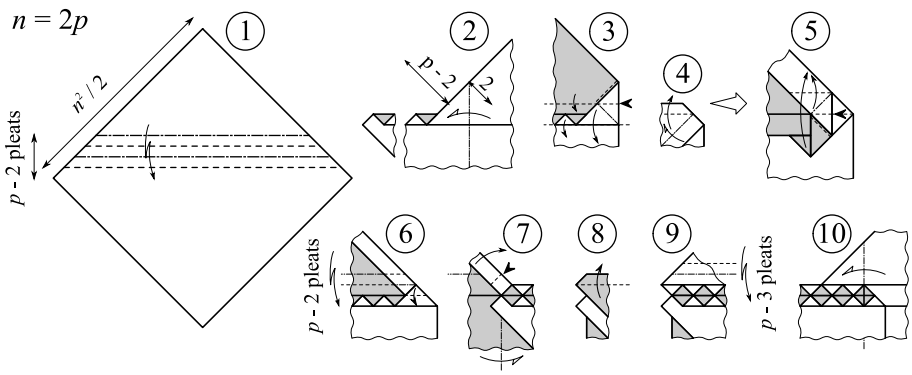

- Step 1: after the pre-crease of a $n \times n$ grid, with all diagonals pre-creased as well, make $p-2$ pleats along the diagonal direction.
- Step 2: book fold back.
- Step 3: squash and book folds.
- Step 4: swivel fold.
- Step 5: a complex squash and swivel coupled fold.
- Step 6: flip on the right and make $p-2$ inside reverse folds to make the same number of pleats.
- Step 7: outside reverse fold.
- Step 8: book fold.
- Step 9: make $p-3$ pleats.
- Step 10: book fold back (this step is similar to step 2). Repeat by recursion from step 3, replacing p by $p-1$.

Figure 27: The generic folding sub-sequence for the optimal $n \times n$ static checkerbord, for n even (only one fourth of the square is depicted due to symmetries).

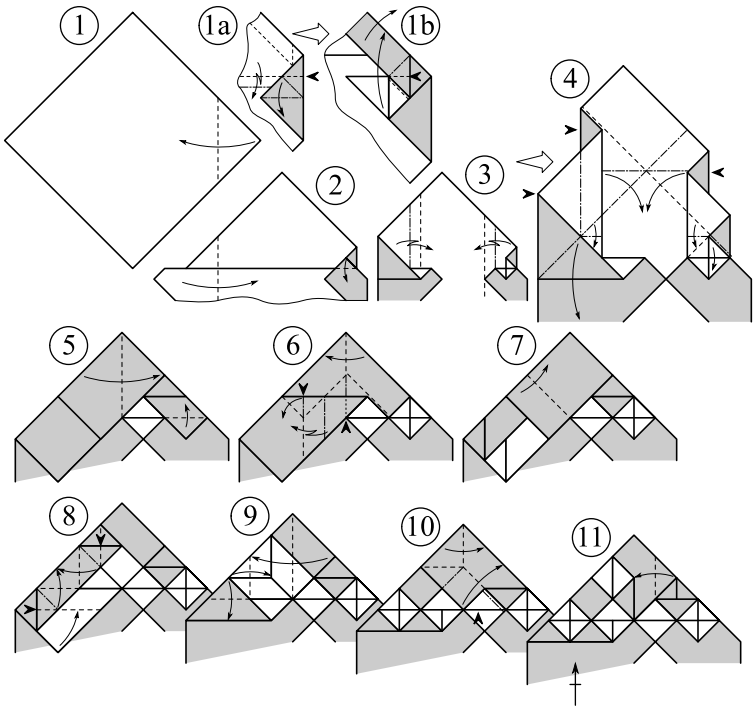

- Step 1: book fold one-third of the 12×12 square.
- Step 1a: make a pleat and a squash fold.
- Step 1b: squash and unfold.
- Step 2: book fold, and flip.
- Step 3: make two underlying pleats.
- Step 4: preliminary fold, and two swivel folds.
- Step 5: half fold and flip.
- Step 6: fold back with a squash and a pleat.
- Step 7: book fold.
- Step 8: two swivel folds.
- Step 9: flips.
- Step 10: inside reverse fold, and book fold back.
- Step 11: flip and repeat on the bottom for the full 5×5 design.

Figure 28: Another folding sequence of the optimal 5×5 static chessboard, from a 12×12 square of paper.

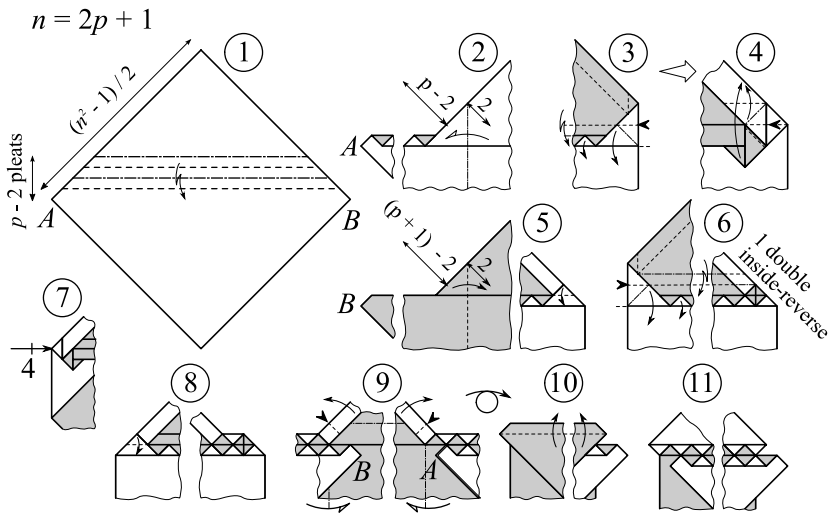

- Step 1: after the pre-crease of a $n \times n$ grid, with all diagonals pre-creased as well, make $p - 2$ pleats along the diagonal direction.
- Step 2: book fold back.
- Step 3: squash and book fold, with one pleat at the back.
- Step 4: a complex squash and swivel coupled fold.
- Step 5: flip on the right and book fold back on the left.
- Step 6: one double inside reverse fold on the right to make a pleat, and repeat step 3 on the left.
- Step 7: repeat step 4 on the left.
- Step 8: flip on the left.
- Step 9: outside reverse folds. Return.
- Step 10: book fold.
- Step 11: the obtained result is similar to step 1. The entire folding sub-sequence 1-11 can now be repeated recursively (replacing p by $p - 1$, and switching points A and B), until step 3 of figure 28 is obtained, leading to the last stages of this figure.

Figure 29: The generic folding sub-sequence for the optimal $n \times n$ static checkerbord, for n odd (only one half of the square is depicted due to symmetry).

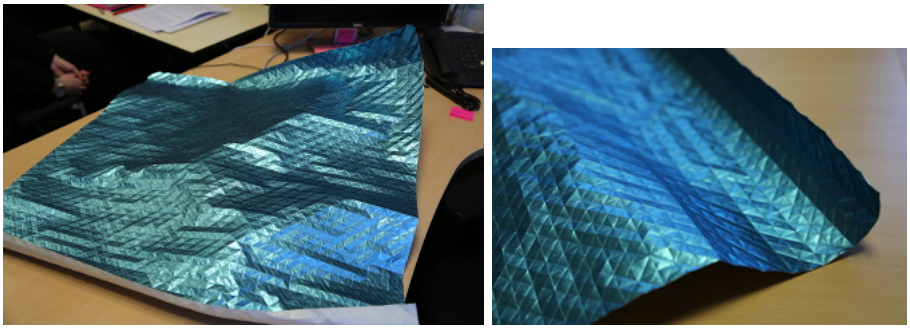

Figure 30: A 64×64 pre-creased square of paper, used for the 11×11 checkerboard design. Photo by INSA Lyon, 2017.

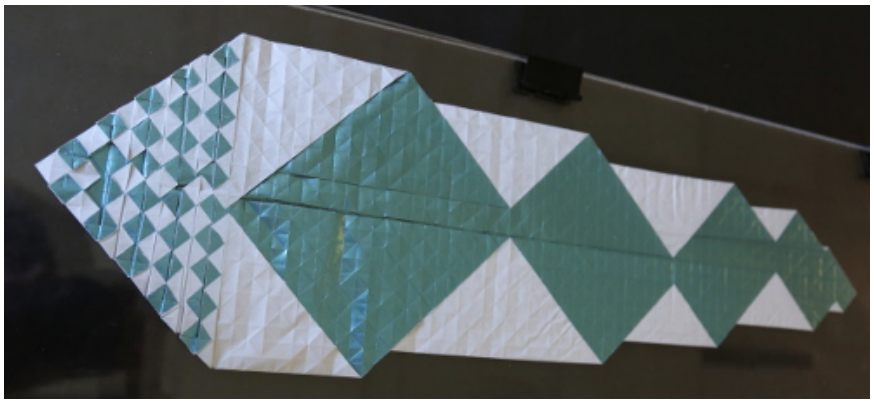

Figure 31: Folded 11×11 checkerboard from a single 60×60 square of paper, one color on each face (half model, second half remaining to be folded). Photo by INSA Lyon, 2017.