HAL
open science

Modelling the properties of liquid foods for use of process flowsheeting simulators: Application to milk concentration

Martial Madoumier, Catherine Azzaro-Pantel, Gaëlle Tanguy-Sai, Geneviève Gésan-Guiziou

To cite this version:

Martial Madoumier, Catherine Azzaro-Pantel, Gaëlle Tanguy-Sai, Geneviève Gésan-Guiziou. Modelling the properties of liquid foods for use of process flowsheeting simulators: Application to milk concentration. Journal of Food Engineering, 2015, 164, pp.70-89. 10.1016/j.jfoodeng.2015.04.023 . hal-01209814

HAL Id: hal-01209814

https://hal.science/hal-01209814v1

Submitted on 28 Sep 2018

HAL is a multi-disciplinary open access archive for the deposit and dissemination of scientific research documents, whether they are published or not. The documents may come from teaching and research institutions in France or abroad, or from public or private research centers.

L'archive ouverte pluridisciplinaire **HAL**, est destinée au dépôt et à la diffusion de documents scientifiques de niveau recherche, publiés ou non, émanant des établissements d'enseignement et de recherche français ou étrangers, des laboratoires publics ou privés.

Open Archive TOULOUSE Archive Ouverte (OATAO)
OATAO is an open access repository that collects the work of Toulouse researchers and makes it freely available over the web where possible.

This is an author-deposited version published in : http://oatao.univ-toulouse.fr/ 20443

To link to this article : DOI:10.1007/s10098-017-1349-6
URL : https://doi.org/10.1007/s10098-017-1349-6

To cite this version :
Mendoza, Luis Fernando and Azzaro-Pantel, Catherine *Bridging LCA data gaps by use of process simulation for energy generation.* (2017) Clean Technologies and Environmental Policy, 19 (5). 1535-1546. ISSN 1618-954X

Any correspondence concerning this service should be sent to the repository administrator: staff-oatao@listes-diff.inp-toulouse.fr

Modelling the properties of liquid foods for use of process flowsheeting simulators: Application to milk concentration

Martial Madoumier [a,b], Catherine Azzaro-Pantel [c,*], Gaëlle Tanguy [a,b], Geneviève Gésan-Guiziou [a,b,*]

[a] INRA, UMR1253 Science et Technologie du Lait et de l'Œuf, 65 rue de Saint Brieuc, 35000 Rennes, France
[b] AGROCAMPUS OUEST, UMR1253 Science et Technologie du Lait et de l'Œuf, 65 rue de Saint Brieuc, 35000 Rennes, France
[c] Laboratoire de Génie Chimique, UMR5503 CNRS, Université de Toulouse, ENSIACET INPT/UPS, BP 84234, F-31432 Toulouse, France

A B S T R A C T

In this paper, a modelling approach for liquid food products in a chemical process simulator is proposed from the flowsheeting methodology widely used for chemical processes. The focus is set on dairy concentration processes, in which milk is defined as a mixture of water and four dry matter components (fat, proteins, carbohydrates, minerals) modelled as "pseudo-components" in a conventional simulator which has been adapted to take into account the behaviour of the liquid food product considered. The significant properties of milk (heat capacity, boiling point elevation, thermal conductivity, density, viscosity, surface tension) are modelled with empirical models found in the literature and implemented in the simulator. In order to validate the approach, an industrial milk evaporation process and a pilot-scale evaporator are modelled and simulated. The results are compared with industrial and experimental results respectively, and show a good agreement with the industrial process. However improvements are needed in modelling the pilot scale evaporator. The proposed approach is generic enough to be extended to other liquid foods.

1. Introduction

The design and development of sustainable food processes, which integrate technical and economic criteria, satisfy customer demands, and are less harmful to ecosystems, constitute a major challenge in a context of global changes (climate change, energy scarcity and energy price increase). An interesting way to meet these constraints entails a systematic approach combining process modelling, simulation, and process optimisation (Azapagic et al., 2011; Lam et al., 2011).

It is recognized that the chemical and petroleum industries are quite familiar with the simulation–optimisation approach, and widely use process simulators such as Aspen Plus, Aspen Hysys, ProSimPlus, Pro/II, and COCO to compute mass and energy balances. These powerful software tools are based on the modelling of heat and mass transfers inside unit operations and their interconnection, by using thermodynamic databases. The use of process simulators then requires the exact knowledge of the composition of the fluids, the specific properties of the individual components and of the involved mixtures, for which changes in the physico-chemical properties of the product through unit operations are computed.

Despite the proximity of the chemical and petroleum sectors with the food industry, the development of this approach in the food sector suffers from two major shortcomings, i.e. a lack of available and applicable food process models (Trystram, 2012), and a lack of thermodynamic models that account for the complexity and biological variations of food materials (Carson, 2006; Fito et al., 2007; Lambert et al., 2013). Thermodynamic models, that allow a complete understanding of molecular behaviour and a prediction of physical properties of a mixture, are only known for specific mixtures such as those classically encountered in the chemical industry. They are not available for food products for which the composition is very complex (more than 2000 molecules in milk for instance) and their properties depend on both the concentration of their components and the interaction between them.

Several attempts at modelling liquid food properties have been achieved so that process simulators and other software tools can be used. Table 1 shows some significant studies which deal with the modelling and simulation of liquid food processes, with an emphasis on fluid milk. Two main approaches are proposed (Table 1):

* Corresponding authors at: INRA, UMR1253 Science et Technologie du Lait et de l'Œuf, 65 rue de Saint Brieuc, 35000 Rennes, France (G. Gésan-Guiziou).

E-mail addresses: catherine.azzaropantel@ensiacet.fr (C. Azzaro-Pantel), genevieve.gesan-guiziou@rennes.inra.fr (G. Gésan-Guiziou).

Nomenclature

A_i	Coefficient specific of component i in the selected viscosity model (see Section 3)	T	Temperature (°C)
BPE	Boiling point elevation (°C)	T_{SAT}	Saturation temperature (°C)
Cp	Specific heat (J g^{-1} K^{-1})	X_i	Mass fraction of component "i" (mass/mass)
DM	Dry matter content (mass%)	x_{SOL}	Total molar fraction of solutes (mol/mol)
H_{vap}	Vaporization enthalpy (J kg^{-1})	ρ	Density (kg m^{-3})
MW	Molecular weight (g mol^{-1})	λ	Thermal conductivity (W m^{-1} K^{-1})
R	Mass gas constant (J g^{-1} K^{-1})	μ	Dynamic viscosity (mPa s)
TEMA	Tubular Exchanger Manufacturers Association	σ	Surface tension (mN m^{-1})

Table 1
Liquid food properties models used in chemical process simulators (and other software Tools).

	Reference	Food unit operations modelled	Food type & definition	Software (company)	Origin of the data to compare the simulation with	Limits to usability in this study
Unique component approach	Ribeiro (2001) and Ribeiro and Andrade (2003)	Preheating, pasteurization, evaporation	Milk (non-conventional unique component)	Aspen Plus (AspenTech) with Fortran 77 unit operation models	Industrial data	Unit operation models include milk properties in their code
	Bon et al. (2010)	Pasteurization	Whole milk	ProSimPlus (ProSim)	Theoretical process	No concentration involved
	Jorge et al. (2010)	Evaporation	Sugarcane juice	Aspen HYSYS (AspenTech)	Industrial data	Unit operation models include sugarcane properties in their code
Pseudo-component approach	Diefes (1997)	Evaporation, spray drying, ultrafiltration, heat exchanger, pumping, holding	Milk: water, fat, proteins, carbohydrates, ash	Matlab with Simulink (MathWorks)	Theoretical processes	Simulator developed internally
	Chawankul et al. (2001)	Evaporation	Orange juice: water, dry component	Aspen Plus (AspenTech)	Experimental data from laboratory and plant scales	Heat transfer coefficient models includes empirical property models; undocumented modelling in streams
	Miranda and Simpson (2005)	Evaporation	Tomato juice: water, dry component	Undocumented	Industrial data	Simulator developed internally
	Cheng and Friis (2007)	Fat standardization, homogenization, pasteurization, cooling	Milk: water, fat, proteins, carbohydrates, ash	Pro/II (Invensys)	Theoretical process	No concentration involved
	Skoglund (2007)	Pasteurization, sterilization, homogenization, pumping, storage	Milk: water, fat, proteins, carbohydrates, ash	Modelica with Dymola (Dassault Systemes)	Industrial data	No concentration involved; simulator developed internally (Commercial library of models)
	Byluppala (2010)	Evaporation, settling, extraction	Milk: water, lactose, 12 fatty acids	Aspen Plus (AspenTech)	No validation because no experimental data was available in the literature	Modelling of chemical interactions is required to simulate the extraction process
Undefined approach	Tomasula et al. (2013)	Homogenization, storage, preheating, pasteurization, holding, fat standardization, homogenization, cooling	Undocumented	SuperPro Designer (Intelligen Inc.)	Theoretical process	No concentration involved; undocumented milk properties

- The food product is defined as a new component ("Unique component approach", see Table 1). This approach is the simplest one, since the properties of the food product are specified as constant or simply depend on temperature, which can be useful to the simulation of the heating or cooling of food product, or to any process step where there is no change in the composition. This last point constitutes one of the two major disadvantages of this approach: (i) it makes it impossible to predict changes in physico-chemical properties in the case of a new composition of the feed (e.g. more fat in the case of milk); (ii) it cannot predict the performance of a process versus a change in properties due to the variation of the composition of the fluid (e.g. concentration) without modifying the built-in unit operation models of the simulator. Bon et al. (2010) successfully modelled and optimised a pasteurization process by defining milk as a single component. Conversely Ribeiro (2001) and Jorge et al. (2010) tried to use this approach to model milk for a concentration step (where one component (water) is partially removed from the treated product) but in these cases the development of new unit operation models was necessary to account for product concentration in the process simulators.

- The food product is divided into several components or "pseudo-components" ("Pseudo-component approach", see Table 1), which represent the major categories of chemical components of the product: water, fat, proteins, carbohydrates, minerals, and fibres. This concept of "pseudo-components" is already in use in the petroleum industry to model complex mixtures (French-McCay, 2004), and is similar to the "proximate analysis" of food components (for further details see Greenfield and Southgate, 2003). In this approach, liquid food is considered as a mixture, the properties of which being computed by additivity of the properties of the individual "pseudo-components". The properties of the individual "pseudo-components" can be modelled in several ways:
  (i) by using the literature models giving the properties of each individual pseudo-component as a function of operating parameters (temperature and concentration in the case of an evaporation process, as in the work of Diefes (1997)). For instance, see the property models proposed by Choi and Okos (1986);
  (ii) by assimilating the properties of individual pseudo-components to the properties of one or more well-known chemical components considered as representative of the component category: for instance, Byluppala (2010) modelled milk fat as mixture of 12 fatty acids, and Zhang et al. (2014) represented milk fat by a mixture of palmitic acid and oleic acid. This approach can be criticized, because assimilating complex milk fat to one or several specific acids is "unacceptable" from a physico-chemical point of view: Fat is present in milk mainly as fat globules with a far more complex structure and composition than those of individual fatty acids (see details in Section 2.2.1 and Croguennec et al. (2008) for more information on milk fat composition);
  (iii) by "artificially" developing the properties of individual pseudo-components in order to match the desired mixture properties by simple addition of these individual properties (Cheng and Friis, 2007). They may be developed through trial-and-error procedures, or parameters optimisation. Such a decomposition has its limits, since all properties of food product are not additive (see for instance viscosity), and therefore cannot be accurately modelled by adding the individual properties of food components.

It is worth noting that the commercial software SuperPro Designer (Intelligen Inc.), which is a batch process simulator designed for various biochemical and specialty industries, as well as for other industries (pharmaceutical, microelectronics, wastewater, etc.), also handles some food processes, as shown in the work of Tomasula et al. (2013): a fluid milk processing plant is simulated, however no documentation could be retrieved about the definition and the modelling of milk in the software (Table 1).

The analysis of the literature clearly pointed out that none of the existing approaches satisfies the needs for food concentration processes simulation. Some methods yield a need for the development of new unit operation mathematical models, which may be time-consuming and specific to the conditions of the study (equipment type, nature of the product, etc.). The other methods are based on the additivity of the properties of food components, which can be a major drawback in the case of some properties.

In order to use the potential of chemical process software along with their unit operation models for food applications, the objective of this work is to propose a new modelling strategy for food products. This strategy is based on the incorporation, in commercial software, of the specific knowledge (from the literature) of the properties of food product as a function of operating conditions (temperature, concentration, composition). The approach consists in defining the food product as a mixture of water and dry matter components (fat, proteins, carbohydrates, minerals, fibres in the general case) for which the mixture properties are calculated with food property models selected from a literature analysis and implemented as subroutines of the process software. This modelling method is derived from the second group of approaches previously reviewed, with the significant difference that the mixture properties are not simply an addition of the individual properties of the pseudo-components: the variations of the mixture properties depending on temperature, pressure, concentration and composition are computed, the composition being represented by the fraction of water and of the dry matter pseudo-components. In some cases, the model requires the individual properties of water, which are integrated in the thermodynamic database of the flowsheeting software tool that will be adopted in this study (its choice will be justified).

The feasibility and benefits of the strategy proposed are investigated for the concentration of milk using an evaporation step. Among other food sectors, the dairy sector largely uses concentration operations such as vacuum evaporation. The evaporation step is considered, together with spray drying, as the most energy intensive operation in the dairy industry: despite recent process improvements, the concentration and drying steps still consume nowadays about 25% of the total energy used in dairy processing (French Ministry of Agriculture, Food and Forestry, 2011). In this work, industrial data taken from the work of Ribeiro & Andrade (Ribeiro, 2001; Ribeiro and Andrade, 2003) and experimental data from experiments performed with a pilot-scale evaporator used in the Dairy platform in Rennes (UMR STLO INRA–Agrocampus Ouest, Rennes France) serve as a test bench to validate the modelling approach and illustrate the potentialities of the proposed food modelling.

2. Materials and methods

2.1. Modelling of milk

2.1.1. Assumptions on the "milk" system

In this study, bovine milk is considered as a mixture of water and four dry components: fat, proteins, carbohydrates, and minerals. During a concentration step by evaporation, water is supposed to be the only component that is removed. In reality, evaporated water drags away a small fraction of dry matter, thus producing "cow waters" which are known to contain a small quantity of organic matter (100–150 mg of Chemical Oxygen Demand per litre). In this work, the dragging of dry matter in evaporated water is considered as negligible and not taken into account in calculations.

This study focuses on the physical properties of bovine milk varying with temperature, concentration and composition. The properties of milk may also be affected by variations in the chemical structure of milk components (mainly proteins), caused by heat treatment in milk powder production processes: protein denaturation is known to occur during evaporation, but the changes affect only a small amount of the total proteins compared to thermal treatments preceding evaporation (preheating, pasteurization), and occur in even lesser proportions during drying (Oldfield et al., 2005; Singh and Creamer, 1991). Since these changes are minor and poorly documented, they have not been taken into account in the present work.

The previous assumptions (no dragging of dry matter constituents; no protein denaturation) imply that:

- There is no need to specify a chemical formula for dry components, since they all are considered inert in a chemical sense.
- Vapour phase properties have to be specified a priori only for water (water properties are readily available in most chemical

process flowsheeting software), since dry matter components are supposed not to be dragged in the vapour phase.
- The models of milk properties are only valid for the liquid phase (no milk component in the vapour phase), and can include temperature and the mass fraction of any component of milk as variables.

2.1.2. Molecular weight of milk pseudo-components

Most chemical process simulators require molecular weight as a fundamental property, and some property models depend on the molecular weight of milk components (e.g. boiling point). Therefore, it is necessary to allocate individual molecular weights to the dry matter components. The molecular weights of milk components chosen in this study are a direct representation of the physico-chemical reality of the components in milk.

2.1.2.1. Fat. In milk, fat is mainly organised into spherical fat globules, with a diameter ranging from 0.1 to 15 μm (mean value around 4 μm). These globules have a core mostly made of triglycerides, and are surrounded by a native biological membrane mainly composed of phospholipids (i.e. polar lipids) and proteins. In order to be more representative of the natural organisation of fat in milk, it is preferable to estimate the "bulk molecular weight" of a single fat globule, instead of retrieving the molecular weight of the various components of milk fat and computing their weighted average. Since milk is always homogenized before evaporation, homogenized milk is considered for the estimation of the number of fat globules per unit volume as well as of the molecular weight of a mean fat globule. Homogenization is performed up to 20 MPa results in about 16 fat globules per μm^3 (Walstra et al., 2006). From the number of fat globules per volume unit, and assuming a milk fat concentration of 36 g L^{-1}, the molecular weight of a fat globule is estimated to be 1.35×10^9 g mol^{-1}. This value is representative of the physico-chemical characteristics of fat in milk and is quite different from the value of Byluppala (2010), where milk fat is modelled as a mixture of 12 fatty acids ranging from caproic acid (116.16 g mol^{-1}) to stearic acid (284.47 g mol^{-1}), and from the work of Zhang et al. (2014) where milk fat is modelled as a mixture of palmitic and oleic acids (256.42 g mol^{-1} and 282.46 g mol^{-1} respectively). Winchester (2000) specified a molecular weight of 3×10^4 g mol^{-1} for milk fat but no explanation was given regarding the choice of this value.

2.1.2.2. Proteins. Bovine milk proteins are classically divided into two major groups: (i) whey proteins make up for about 20% of the total protein content; they are also called soluble proteins, because they do not precipitate during cheese manufacture; (ii) caseins represent the remaining 80% of the total protein content, and are aggregated into protein structures, called micelles; these micelles are responsible for the white colour of milk due to light diffraction. In the calculation of the molecular weight of proteins, only caseins micelles are considered in this work. Assuming an amount of 10^{18} micelles per litre of milk (Fox and Brodkorb, 2008) and a casein concentration of 27 g L^{-1}, a casein micelle weighs 2.7×10^{-17} g, which gives a "molecular weight" of about 1.63×10^7 g mol^{-1} for a micelle. This value is significantly different from the one used in Zhang et al. (2014) where the average molecular weight of milk proteins, represented by casein, is set to 23,000 g mol^{-1}. In the work of Winchester (2000), the molecular weight of milk proteins is set to 24,000 g mol^{-1}. The values used by both Winchester (2000) and Zhang et al. (2014) have no physical meaning since caseins are mainly not present under the form of individual molecules in milk but associated into micelles.

Table 2
Molecular weight values (g mol^{-1}) of milk dry matter components from different works.

Milk dry matter component	This study	Winchester (2000)	Zhang et al. (2014)
Fat	1.35E+09	30,000	269.4
Proteins	1.63E+07	24,000	23,000.0
Carbohydrates (lactose)	342.3	300	342.3
Minerals	50.1	100	66.5

2.1.2.3. Carbohydrates. Carbohydrates in milk consist mostly in lactose. Therefore the molecular weight of lactose was used, i.e. 342 g mol^{-1}.

2.1.2.4. Minerals. Milk also contains mineral substances which are partially dissolved in the aqueous phase of milk, and partially complexed with themselves and/or with proteins. The molecular weight of milk minerals was computed as the average molecular weight of the major mineral constituents of milk in aqueous phase (milk saline constituents such as potassium, calcium, inorganic phosphate, soluble citrate, etc.), weighted by their respective fractions as given in the work of Gaucheron (2005). The obtained molecular weight for milk ash was 50 g mol^{-1}.

Molecular weight values used for this work are grouped in Table 2.

2.1.3. Key properties of milk

Several physical properties of the food product require modelling, so that the behaviour of milk through process steps can be mathematically described (Aspen Technology, 2011; Cheng and Friis, 2007; Ribeiro, 2001; Smith, 2011; Zhang et al., 2014):

- For mass and energy balances, the heat capacity and the boiling point are required. The heat capacity is used to calculate enthalpy and energy balances, and the boiling point is involved in vapour–liquid equilibrium (the so-called "flash calculations"). In the case of mixtures with water as a solvent, the boiling point elevation (BPE) is used to express the temperature difference between the boiling point of water and the one of the mixture at the same pressure.
- Simulations for unit operations design involve the evaluation of density, thermal conductivity, viscosity, and surface tension.

The properties of milk are modelled mostly with empirical models (i.e. based on correlations obtained from the fitting of experimental data) which were found in the literature.

2.2. Process flowsheeting simulation

2.2.1. Selection of a process flowsheeting simulator

The Aspen Plus simulator (Aspen Technology, Inc., Burlington, USA) was selected for this work. This simulator has a strong capacity to integrate component models that are not included in its built-in database, and allows an easy access to the property parameters of the components, as well as to the models of the physico-chemical properties. A major advantage of this simulator is its interoperability, which facilitates its coupling with optimisation procedures (You et al., 2012). This asset is particularly attractive for further use of the simulator in eco-design approaches where the process performance is accounted for.

2.2.2. Implementation of properties in the simulators

In Aspen Plus, as in most simulators, thermodynamic models must be selected to compute the physico-chemical properties of individual components (or pseudo-components) and mixtures involved in the process. Mixture property models generally involve

"sub-models" for the individual properties of chemical components (ideal gas heat capacity, vapour pressure, liquid density, etc.), which require component-specific parameters and specific scalar parameters for chemical components (normal boiling point, enthalpy of formation, etc.). These parameters were not used in this study, because they are not known for three of the major components of milk dry matter (fat, proteins, minerals), and their complex estimation is beyond the scope of this work (for instance, how to estimate a dipole moment value for milk fat, or a value for the standard enthalpy of formation of milk caseins?).

Instead of adapting the food product model to existing property models, as it has been achieved in previous works (Bon et al., 2010; Byluppala, 2010; Zhang et al., 2014), the available food product models were, in this work, directly integrated in the simulator: the key mixture property models defined in Aspen Plus were replaced by external Fortran programs (defined as "user models" in Aspen Plus), where each milk property model selected from the literature was implemented. The Fortran programs are used by the simulator when the corresponding liquid mixture property has to be computed. This concerns the molar enthalpy (which contains the model for heat capacity), the activity coefficient (from which the BPE stems), the molar volume (calculated from a mass density model), the thermal conductivity, the viscosity, and the surface tension. In the case of the BPE, a subroutine was created to replace the activity coefficient model, where the BPE is calculated and its value is added to the water saturation temperature value, giving a "target" boiling point value that the activity coefficient has to match. The details of the calculation can be found in Appendix A. With this method, any model for each key property of milk that is required (i.e. heat capacity, boiling point elevation, density, thermal conductivity, viscosity, and surface tension) can be written in a Fortran program used by Aspen Plus. It must be highlighted that:

- The vapour mixture enthalpy model was defined as the ideal gas model, which is an acceptable hypothesis since only water is supposed to evaporate (Sun and Hu, 2003).
- Since the considered food product is in liquid state, and the evolution of thermodynamic state goes from liquid to vapour through the water evaporation, the reference state for enthalpy calculations was changed in Aspen Plus from ideal gas to liquid.

2.3. An industrial and a pilot-scale plants as references

In order to validate the models of the physico-chemical properties of milk, an industrial plant and a pilot evaporation process were modelled in Aspen Plus.

2.3.1. Industrial milk concentration plant (Ribeiro, 2001; Ribeiro and Andrade, 2003)

The industrial milk concentration plant (Embaré Indùstrias Alimenticias S.A., Brazil) considered is the one described by Ribeiro (2001) and Ribeiro and Andrade (2003). The milk process (Fig. 1) consists of two pre-heaters (HX-1, HX-2), a pasteurization unit (fed with hot water, Past-1), and a four-effect evaporator (Evap-1–4). Each effect is made of a plate evaporator, followed by a centrifugal separator to separate water vapour and milk concentrate. For each evaporator effect, 10% of the concentrate is recycled to its feed. Steam enters the system at 6.67 bar and is sent to a thermocompressor (TP – 101) before feeding the evaporators. The thermocompressor and the preheaters use recycled vapour from the evaporator effects, which reduces the overall steam consumption. This process treats 11,352 kg/h of a standardised bovine whole milk (12% total solid), and produces 2742 kg/h of milk concentrate with a 48% total solids content.

It must be highlighted that the industrial process studied in Ribeiro (2001) should not be taken as a standard scheme for the dairy industry. The process leads to the recycling of the concentrate, which is prohibited today due to the risk of a too long product residence time, resulting in high protein denaturion and bacterial growth in the concentrate (Fuquay et al., 2011; Heldman and Lund, 2006). Moreover the use of plate evaporators is less frequent compared to other evaporation technologies, such as falling-film (tubular) evaporators (Decloux and Rémond, 2009).

2.3.2. Pilot-scale evaporator (Silveria et al., 2013)

A pilot-scale, single-effect falling-film evaporator (GEA Process Engineering, St Quentin-en-Yvelines) available in Rennes (Dairy Platform, STLO, INRA) was used to validate the property models at experimental scale. This equipment item has already been described by Silveria et al. (2013). It is made of three evaporation tubes connected to an indirect condenser integrated in the separator. Each tube is arranged in its own body fed with fresh steam (saturated at 75 °C) and undergoes the same vacuum pressure (0.02 MPa). The flowsheet of the evaporator is shown in Fig. 2. Two experiments involving milk were performed at a feed flow rate of 50 kg/h, a first run with skim milk at 10% total solids concentrated to 24%, and a second run with the concentrate at 24% up to 52% total solids (Silveira et al., 2013).

2.3.3. Modelling of industrial and experimental plants in Aspen Plus

The unit operations involved in both the industrial and the pilot-scale process were modelled using the built-in blocks in Aspen Plus, listed in Table 3. The pre-heaters and the pasteurizer

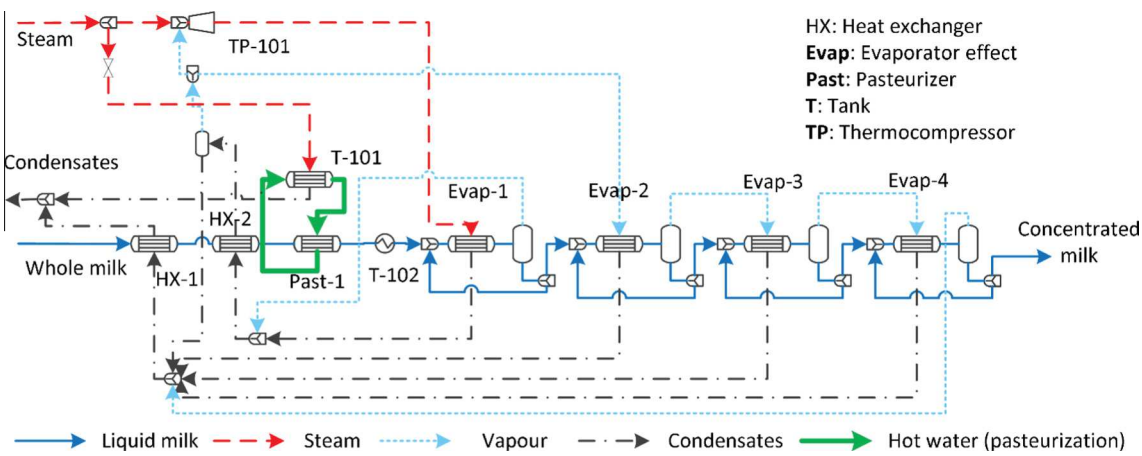

Fig. 1. Flowsheet of the industrial evaporation plant used for the validation of the models of physic-chemical models (Ribeiro, 2001).

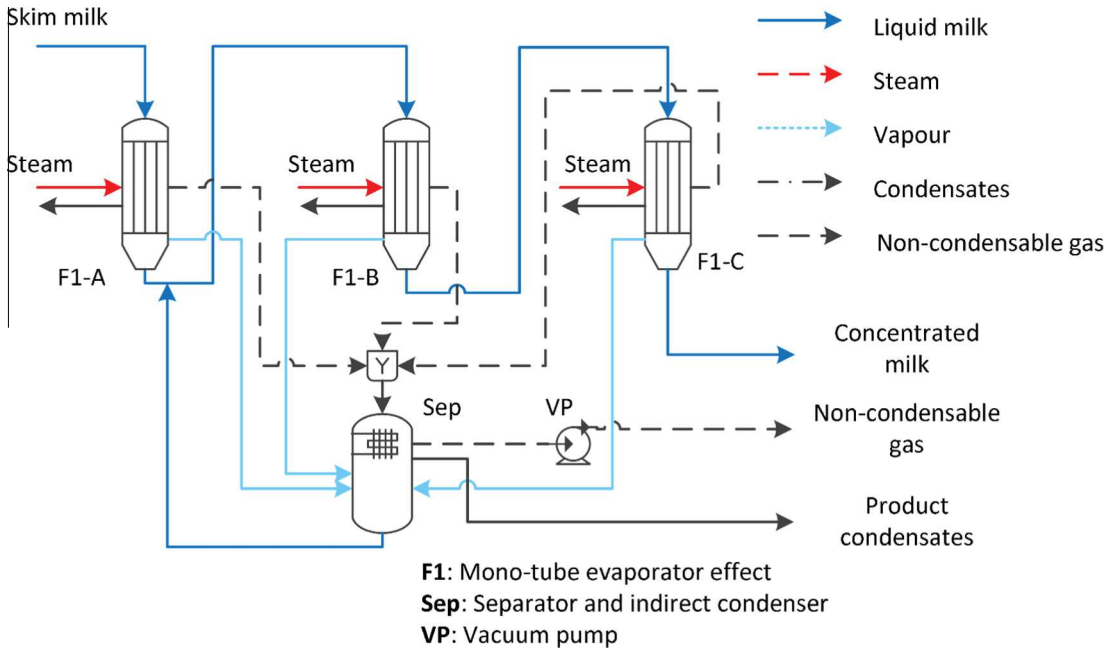

Fig. 2. Flowsheet of the pilot evaporator described in Silveira et al. (2013).

Table 3
Aspen Plus blocks used to model the industrial process and the pilot evaporator.

Unit operation	Aspen Plus blocks with flowsheet reference code
Pre-heaters 1 & 2	Heater HX-1A for heat source (vapour condensation) and Heater HX-1A for heat exchange with milk
Pasteurizer	Heater Pasto-1A for heat source (hot water temperature decrease) and Heater Pasto-1A for heat exchange with milk
Stabilizing tank	Heater STank (temperature decrease)
4-Effect evaporator (Evap-1 to Evap-4)	1 effect to compute heat and mass balances =1 Heater (Evap-iA; i being the effect n°) for steam/vapour condensation +1 Heater (Evap-iB) for heat exchange with milk +1 Flash2 (Sep-i) for the separation of concentrate and evaporated water
Mono-effect pilot evaporator, 3 tubes	1 tube to compute output from input and geometry =1 Valve (Vac-A to Vac-C) to set inlet milk stream to vacuum pressure +1 HeatX (F1-A to F1-C) to model the tube and surrounding shell +1 Flash2 (Sep-A to Sep-C) for the separation of concentrate and evaporated water

of the industrial plant (Ribeiro, 2001; Ribeiro and Andrade, 2002) were modelled with "Heater" blocks, which perform heat and mass balances on a stream under varying pressure or temperature, or exchanging heat. Due to the unusual geometry of the plate evaporators involved in this industrial process (Ribeiro, 2001; Ribeiro and Andrade, 2002), it is not possible to model this equipment item in a detailed way with the Aspen Plus tools alone. A user model is necessary to account for the geometry of the plates, following a similar approach to that adopted in Ribeiro and Andrade (2002) where a rigorous mathematical model was developed. Instead, the evaporator effects were modelled according to the same method as the pre-heaters and pasteurizer, in order to perform heat and mass balances. A "Flash2" block was added to simulate the separation between liquid and vapour streams. The obtained flowsheet is shown in Fig. 3 and the operating conditions specified in the different Aspen Plus blocks are given in Appendix C, Table B.3.

In the case of the pilot-scale process (Silveira et al., 2013), the evaporator was modelled on the one hand with Heater blocks to perform heat and mass balances, and on the other hand in a more detailed way with the Aspen Plus "HeatX" block. HeatX is a standard heat exchanger block which comprises the possibility to model shell and tube heat exchangers, and the pilot falling film

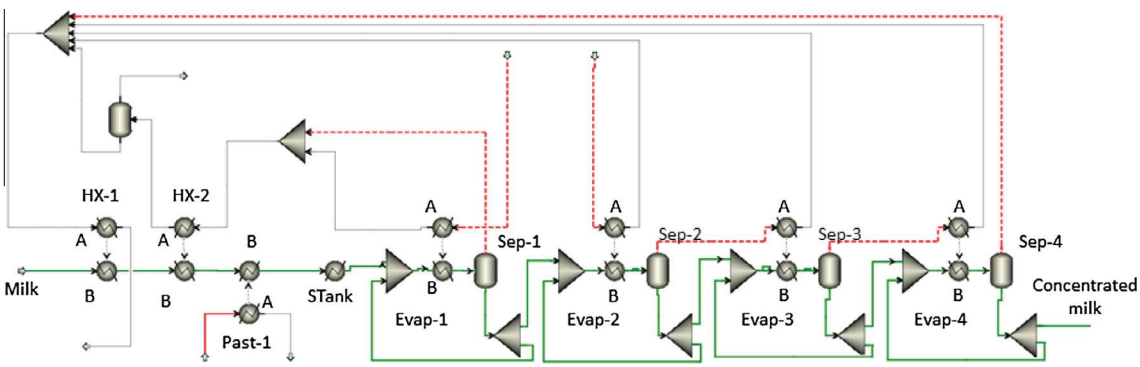

Fig. 3. Flowsheet of the evaporation process modelled in Aspen Plus to perform heat and mass balances. The flowsheet is based on an industrial process previously described in the work of Ribeiro (Ribeiro, 2001; Ribeiro and Andrade, 2003). For the legend, see Table 3.

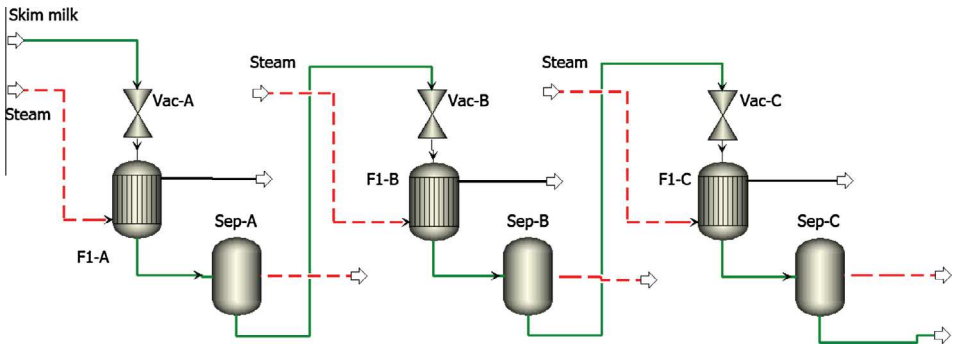

Fig. 4. Flowsheet of the pilot evaporator (Silveira et al., 2013) modelled in Aspen Plus to predict performance according to geometry of the equipment. For the legend, see Table 3.

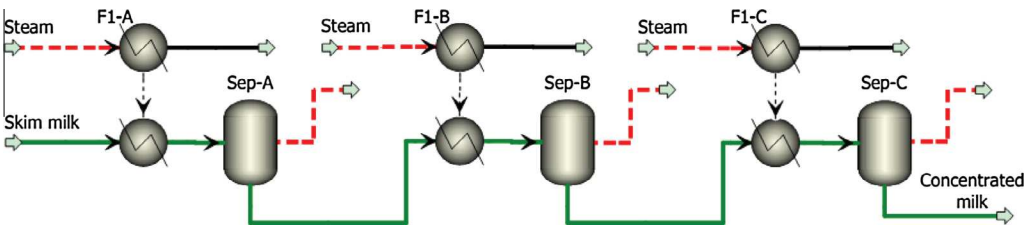

Fig. 5. Flowsheet of the pilot evaporator (Silveira et al., 2013) modelled in Aspen Plus to predict heat and mass balances. For the legend, see Table 3.

evaporator can be assimilated to a vertical, downward flow shell and tube heat exchanger. Sufficient data is available in Silveira et al. (2013) on the equipment design and geometry, and on the flow rates and operating conditions of the inlet streams. The geometry of the evaporator tubes was specified in the HeatX block, with the parameters shown in Appendix C, Table B.5, along with the operating conditions specified in the different Aspen Plus blocks. Because the HeatX block is designed to model industrial-size heat exchangers, the modelling of a pilot-size heat exchanger requires a few tweaks in the HeatX block, which are documented in the Aspen support website (http://support.aspentech.com/) and available from the corresponding author. The resulting flowsheet is presented in Fig. 4, and the flowsheet of the same process for heat and mass balanced only is presented in Fig. 5.

2.4. Strategy for the identification and validation of milk property models

2.4.1. Identification of milk property models

Prior to the development of the Aspen Plus database, adequate models must be selected to compute the properties of milk required for the simulation, i.e. heat capacity, BPE, density, thermal conductivity, viscosity, and surface tension. A selection of models from the literature was carried out, so that only models valid for bovine milk (or assumed bovine milk when not specified) and varying with at least temperature and concentration were considered.

The different models describing the same property were compared to each other and to experimental data within their validity ranges. For that purpose, each specific property was computed using the various literature models at 3 or 4 different levels of dry matter, in a range of temperature compatible with evaporation process. The dry matter levels correspond to the dry matters of milk, of a 50%-concentrated milk and, of an intermediate milk concentrate. When experimental values were available, the property was also computed at a fourth dry matter content, corresponding to the dry matter content of the experimental values. The initial milk composition used to compute property values was not always the same for the different properties, because property models were compared to experimental values, which were retrieved from various works and obtained with various milk compositions.

For each property, the computed milk property values were plotted on 4 graphs, each corresponding to a dry matter level. Only values with the range of validity of the model were displayed in the graphs. Error bars represented the relative or absolute error between the model and the experimental values, when given by the authors of the model.

2.4.2. Sensitivity analysis on the properties

Once the property models had been implemented in the simulator, a sensitivity analysis of the process performance to the milk property models was performed with the pilot-scale plant in order to identify which properties had the highest impact. With such information it is possible to define which property models should be improved to reach a better accuracy in the predictions of the process model.

The pilot-scale process (Silveira et al., 2013) was chosen for the sensitivity study, because the geometry of the equipment can be modelled in Aspen Plus (see Section 2.3.3). It must be highlighted that the computation of vertical tubular heat exchanger models, which include equipment design and geometry, is performed by default with the Steiner–Taborek correlation (Steiner and Taborek, 1992) implemented in the HeatX model (Aspen Technology, 2011). However, this correlation cannot be used, because it is valid for a Reynolds number of at least 4000, whereas preliminary simulation tests showed that in this study, the Reynolds number is never higher than 700: as a consequence, changes in viscosity modelling gave no change in simulation results (a 0.01% difference in output dry matter percentage appeared for a reduction in viscosity computed values by at least 1000). In order to study the sensitivity of the simulation to all six major properties of milk (including viscosity), the Steiner–Taborek correlation was replaced with the correlation of Alhusseini et al. (1998). This correlation has a wider range of validity (Reynolds number from 124 to 15,600), and depends on the Reynolds, Prandtl and Kapitza numbers, therefore its output is directly related to the values of heat capacity, density, thermal

conductivity, surface tension and viscosity of milk. With the additional information provided by vapour-liquid equilibrium calculation affected by the BPE model, the influence of the six key properties of milk on simulation results can be studied. For more details on the heat transfer coefficient subroutine implemented in Aspen Plus, and the correlation of Alhusseini, see Appendix B.

With the use of such heat transfer coefficient model, it was possible to design a series of experiments with 6 properties (6 factors) and 2 levels for each factor, leading to a maximum of 64 experiments required. The first level of each property/factor was the value calculated by the original property model (i.e. without modification), and the second level was the value increased by 10%. The observed response was the final product concentration obtained at the output of the last evaporator effect.

2.4.3. Validation of the property models integrated to a simulation tool

The validation of the implementation of selected property models in the simulator is useful to confirm whether the chosen property models correctly reproduce the behaviour of milk undergoing evaporation process. This validation was performed by comparison of industrial or pilot-scale data with the results of the simulation for a given unit operation.

The heat capacity and BPE models were validated using heat and mass balances, which do not require information on the equipment design and geometry. Only inlet and outlet streams conditions, flow rates and heat exchanged between steam and milk in the evaporators are required. Validation could be performed with both the systems (industrial and pilot scale plants – see Section 2.3), since relevant data were available. The other properties of milk (density, thermal conductivity, viscosity, surface tension) required for design purposes were validated only with the information taken from the pilot scale evaporator (Silveira et al., 2013).

3. Results

3.1. Choice of milk property models

The comparison of the different property models is described in this section, property by property.

3.1.1. Heat capacity

Two empirical models describe the liquid heat capacity of bovine milk as a function of temperature and concentration: the model Fernández-Martín (1972a) and the one of Minim et al. (2002). The empirical model of Choi and Okos (1986) was also selected because of its applicability to numerous liquid food products. Fig. 6 shows the variation of heat capacity with temperature for 4 different dry matters (16.7%, 25.0%, 28.0%, 50.0%). At 28.0% dry matter content, milk composition matched the composition of the whole milk with which the experimental data was measured (as mentioned in the legend of each figure).

From the comparison of the three models for heat capacity (Fig. 6), the model of Choi and Okos (1986) was chosen because of a satisfying match with both empirical models of Fernández-Martín (1972a) and Minim et al. (2002). Besides, a wider validity temperature and dry matter ranges than the other models are proposed. At 16.7% dry matter, all models exhibited a close agreement. At 25.0% and 28.0%, the relative difference with empirical models and experimental data was not higher than 6%.

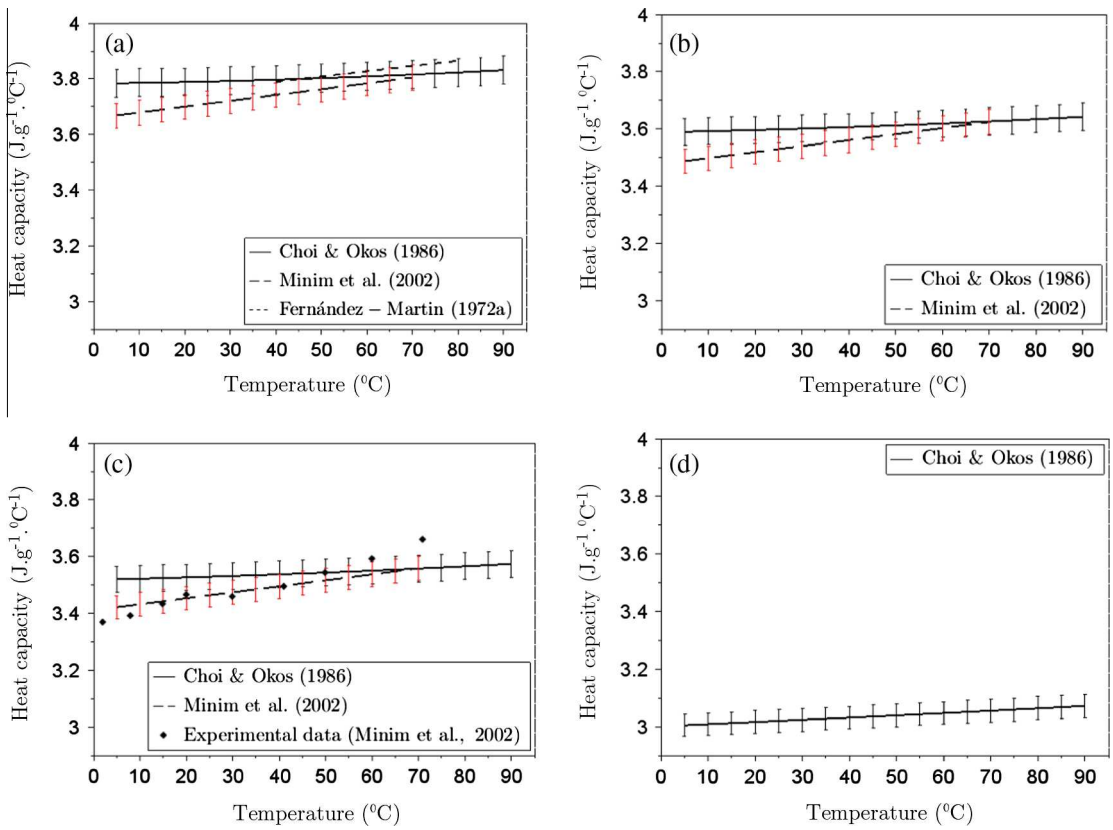

Fig. 6. Heat capacity of whole milk (83.3% water, 7.7% fat, 3.5% protein, 4.8% lactose, 0.7% minerals) as a function of temperature for 4 different dry matter contents of milk concentrates ((a) 16.7%; (b) 25.0%; (c) 28.0%; (d) 50.0%). Models are plotted only when they are in their range of validity. The error bars on the data of Choi and Okos (1986) represent the standard error, given by the authors between their model and experimental values obtained with an "evaporated milk" (no fat content given). In the case of the Minim model, the error bars represent the mean relative difference, specifically calculated for this study, from the model and the given experimental data.

The model of Choi and Okos (1986) was the only one that could predict the heat capacity of milk concentrates at high dry matter (>28.0%) and high temperature (>75–80 °C). However it must be highlighted that no measurement of the heat capacity of whole milk concentrated at 50% could be found in the literature. Another set of experimental data is required for a further validation of the model of Choi and Okos (1986) at high concentrations (this aspect is beyond the scope of this work).

In the case of skim milk (0.44% fat content from the work of Minim et al. (2002)), the model of Choi and Okos (1986) also fitted well the experimental data points, because of its wide validity ranges for temperature and concentration, and it was supported by experimental data at low concentrations (see Appendix D).

3.1.2. Boiling point elevation (BPE)

To our knowledge, only one generic model for the prediction of boiling point elevation of milk concentrates was reported in the literature. Assuming an ideal mixture between milk components, Winchester (2000) calculated the BPE as a function of the heat of vapourization of water, the boiling temperature of water, and the molar fraction of solute components. This model was only developed from a theoretical basis, which no experimental data supported in the case of whole milk. Fig. 7 shows the BPE values calculated both for whole and skim milks (standard composition) at 60 °C. In the case of whole milk (Fig. 7(a)), only the theoretical model of Winchester (2000) was studied, with no experimental data to bring support. In the case of skim milk (Fig. 7(b)), a satisfying agreement between experimental and predicted values of the model was found. The model of Winchester (2000) was therefore selected for this study, although the validation with experimental data for whole milk has not yet been performed. The obtained BPE values were relatively low, (⩽1 °C in the case of whole milk). However the BPE is not to be neglected, particularly in the case of mechanical compression of vapour in evaporators (APV, 2006).

Since the BPE model from Winchester (2000) depends on the molecular weight of the mixture components through molar fractions (Table 4), its sensitivity to molecular weight was tested: the BPE was computed with the molecular weight values used in the

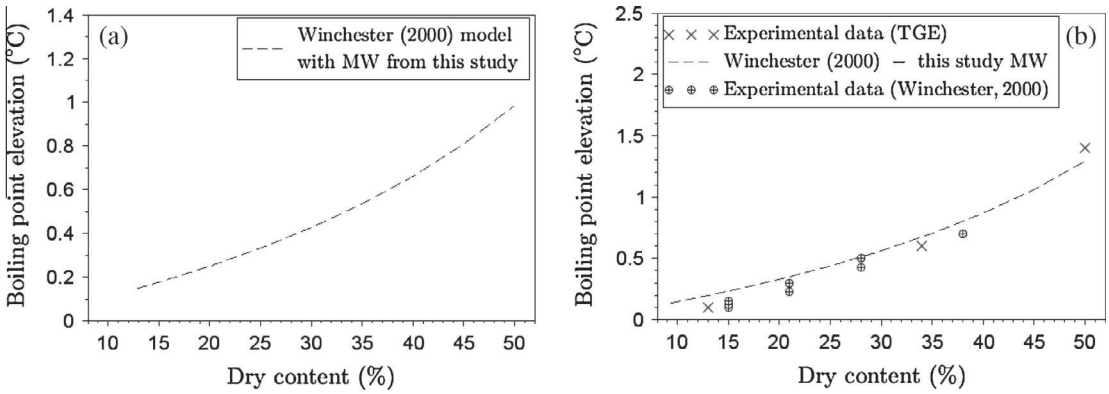

Fig. 7. Boiling point elevation of whole ((a) 87.1% water, 3.6% fat, 3.4% protein, 4.8% lactose, 1.1% minerals) and skim ((b) 90.7% water, 0.3% fat, 3.5% protein, 4.8% lactose, 0.7% minerals) milk as a function of dry matter. For whole milk (a) the curves overlap. For skim milk (b) experimental data was given by an industrial partner (TGE – Thermique-Genie-Chimique-Evaporation, 300 rue Clément Ader, 27,000 Evreux, France). MW = molecular weight.

Table 4
Selected property models for milk and food components.

Property	Model	Reference
Heat capacity (Cp)	$Cp = \sum Cp_i \times X_i$ With: $Cp_{Fat} = 1.9842 + 1.4733 \times 10^{-3} \times T - 4.8008 \times 10^{-6} \times T^2$ $Cp_{Protein} = 2.0082 + 1.2089 \times 10^{-3} \times T - 1.3129 \times 10^{-6} \times T^2$ $Cp_{Carbohydrate} = 1.5488 + 1.9625 \times 10^{-3} \times T - 5.9399 \times 10^{-6} \times T^2$ $Cp_{Ash} = 1.0926 + 1.8896 \times 10^{-3} \times T - 3.6817 \times 10^{-6} \times T^2$	Choi and Okos (1986)
Boiling point elevation (BPE)	$BPE = \left[\frac{1}{\frac{1}{T_{SAT}} - \frac{R \times \ln(1 - x_{SOL})}{h_{VAP}}}\right] - T_{SAT}$	Winchester (2000)
Density (ρ)	$\rho = \frac{1}{\sum_{w,i}^{x} / \rho_i}$ With: $\rho_{Fat} = 925.59 - 4.1757 \times 10^{-1} \times T$ $\rho_{Protein} = 1329.9 - 5.1840 \times 10^{-1} \times T$ $\rho_{Carbohydrate} = 1599.1 - 3.1046 \times 10^{-1} \times T$ $\rho_{Ash} = 2423.8 - 2.8063 \times 10^{-1} \times T$	Choi and Okos (1986)
Thermal conductivity (λ)	$\lambda = (326.58 + 1.0412 \times T - 3.37 \times 10^{-3} \times T^2) \times (0.46 + 0.54 \times X_{Water}) \times 1.73 \times 10^{-3}$	Riedel (1949)
Viscosity (μ)	$\mu = 1000 \times \mu_{Water} \times \exp\left(\frac{\sum A_i \times X_i}{X_{Water}}\right)$ With: $A_{Fat} = 3.46 - 0.025 \times T + 1.6 \times 10^{-4} \times T^2$ $A_{Proteins} = 15.367 - 0.178 \times T + 0.0017 \times T^2$ $A_{Carbohydrates} = 3.35 - 2.38 \times 10^{-2} \times T + 1.25 \times 10^{-4} \times T^2$	Morison et al. (2013)
Surface tension (σ)	General model (whole milk & skim milk): $\sigma = 55.6 - 0.163 \times T + 1.8 \times 10^{-4} \times T^2$	Bertsch (1983)

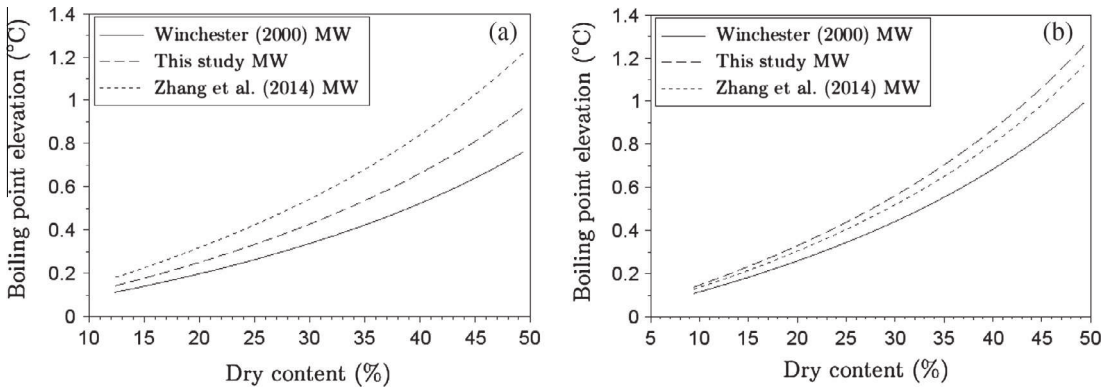

Fig. 8. Boiling point elevation of whole ((a) 87.1% water, 3.6% fat, 3.4% protein, 4.8% lactose, 1.1% minerals) and skim ((b) 90.7% water, 0.3% fat, 3.5% protein, 4.8% lactose, 0.7% minerals) milk as a function of dry matter. The model used to compute BPE is the same (Winchester, 2000). Only the molecular weight values (MW) differ for each curve.

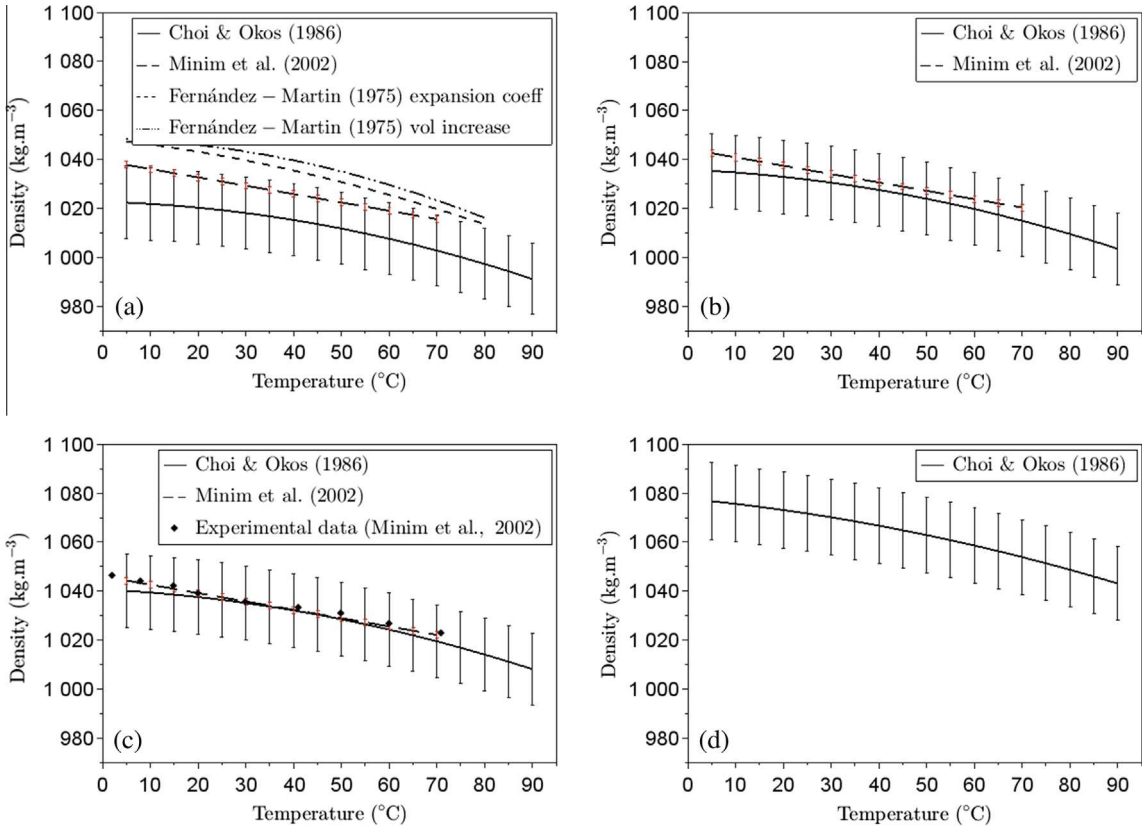

Fig. 9. Density of whole milk (83.3% water, 7.7% fat, 3.5% protein, 4.8% lactose, 0.7% minerals) and concentrates for different dry matter contents ((a) 16.7%; (b) 25.0%; (c) 28.0%; (d) 50.0%). The error bars on the data of Choi and Okos (1986) represent the standard error, given by the authors between their model and experimental values obtained with an "evaporated milk" (no fat content given). In the case of the Minim model, the error bars represent the mean relative difference, specifically calculated for this study, from the model and the given experimental data.

work of Winchester (2000), the ones proposed in this work, and the ones from the work of Zhang et al. (2014) (see Table 2 and Fig. 8). The molecular weight values are given in Table 2, and the results in Fig. 8. The influence of fat is clearly shown: the highest difference between BPE values occur in the case of whole milk (Fig. 8(a)): at 49% dry content, the molecular weight values of Zhang et al. (2014) produce a BPE of 1.22 °C and the values of Winchester (2000) a BPE of 0.76 °C. It can be concluded from these results that the choice of molecular weight values seem to have a relatively small effect on the computation of the BPE. It should be noted that with the values of Zhang et al. (2014) for the molecular weight, higher BPE values are obtained for whole milk than for skim milk, which is inconsistent with current knowledge (water activity in skim milk is lower – see Lewicki (2004) and other authors regarding water activity in milk and other food products).

3.1.3. Density

Choi and Okos (1986), Fernández-Martín (1975), and Minim et al. (2002) developed models for the prediction of milk density. In the case of Fernández-Martín (1975), two models are available: the former predicts the thermal expansion coefficient (i.e. the change in volume in response to a change in temperature) of milk, while the latter predicts the volume increase per unit mass of milk

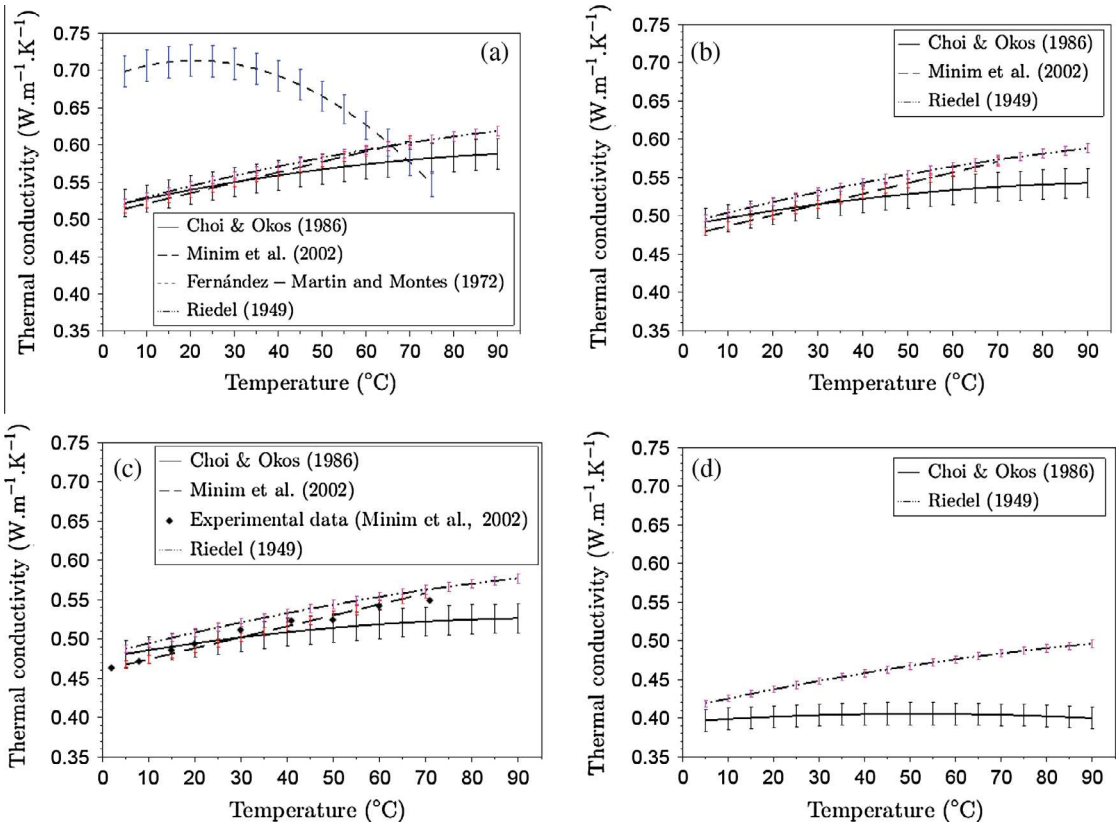

Fig. 10. Thermal conductivity of whole milk (83.3% water, 7.7% fat, 3.5% protein, 4.8% lactose, 0.7% minerals) for different dry matter contents ((a) 16.7%; (b) 25.0%; (c) 28.0%; (d) 50.0%). The error bars on the data of Choi and Okos (1986) represent the standard error, given by the authors between their model and experimental values obtained with an "evaporated milk" (no fat content given). In the case of the Minim et al. (2002) model, the error bars represent the mean relative difference, specifically calculated for this study, from the model and the given experimental data. The error bars on the data of Fernández-Martín and Montes (1972) represent the 3% maximal difference with experimental data of the model, and the error bars on the data of Riedel (1949) represent the 1% prediction error of the model, both calculated by the authors of the respective studies.

(respectively indicated as "expansion coeff" and "vol increase" in Fig. 9). The agreement between the model of Choi and Okos (1986) and experimental data for the density of milk was satisfying, as shown in Fig. 9 for whole milk, and in Appendix D for skim milk respectively. There was a more significant discrepancy between the models of Choi and Okos (1986) and of Fernández-Martín (1975), particularly in the case of skim milk at intermediate dry matter (see Appendix D, Fig. C.3). Since the model of Choi and Okos (1986) is supported by experimental data in a large range of dry matter content and is valid for a wider range of temperature and dry matter content compared to the other existing models, the density model of Choi and Okos (1986) was chosen for this study.

3.1.4. Thermal conductivity

The model of Choi and Okos (1986) for thermal conductivity was compared with the models of Minim et al. (2002), Fernández-Martín and Montes (1972), and Riedel (1949). Experimental data from the work of Minim et al. (2002) supported the comparison at 28% dry matter. For skim milk, (see Appendix D), all models were mutually consistent and also agree with experimental data. However in the case of whole milk (Fig. 10), although the models of Choi and Okos (1986), Minim et al. (2002), and Riedel (1949) were in a relatively good agreement, the model of Fernández-Martín & Montes (1972) gave values that are strongly different from the three others (33% difference between for Fernández-Martín and Montes (1972) and Choi and Okos (1986) at 20 °C and 16.7% dry matter content, Fig. 10(a)). This strong discrepancy can be explained by the high fat-to-solids-non-fat ratio of milk, taken from Minim et al. (2002) and considered as a reference. For the sake of comparison, the model developed by Fernández-Martín and Montes (1972) was used with the same fat-to-solids-non-fat ratio, which is higher than the maximum fat-to-solids-non-fat ratio with which the model of Fernández-Martín and Montes (1972) was developed. Another significant difference occurred between the models of Choi and Okos (1986) and Riedel (1949) at 50% dry matter (Riedel was 24% higher than Choi & Okos at 90 °C, see Fig. 10(d)), with a trend reversal of the model of Choi and Okos (1986) starting around 50 °C. Here the model of Choi and Okos (1986) was influenced by the high fat content values: in the model of Choi and Okos (1986), the thermal conductivity of fat is related to temperature (1st order) with a negative coefficient, according to the Eq. (1).

$$\lambda_{Fat} = 1.8071 \times 10^{-1} - 2.7604 \times 10^{-3} \times T - 1.7749 \times 10^{-7} \times T^2 \quad (1)$$

The 1st order coefficient (−2.7604) has a higher absolute value than 1st order coefficients of the other components (proteins, carbohydrates, minerals), and is negative, consequently giving the decrease in thermal conductivity values that was observed (Fig. 10(d)).

The models of Choi & Okos and Riedel stood out as the most relevant models, although there was a lack of experimental data on whole milk at 50% dry matter to establish which the best option was. Since the model of Riedel (1949) exhibited a closer match to the trend of experimental data at 28% dry matter (Fig. 10(c)), it was chosen for this study.

3.1.5. Viscosity

The models of Alcântara et al. (2012), Fernández-Martín (1972b), Morison et al. (2013), and Reddy and Datta (1994) were used for the calculation of viscosity of milk and milk concentrates.

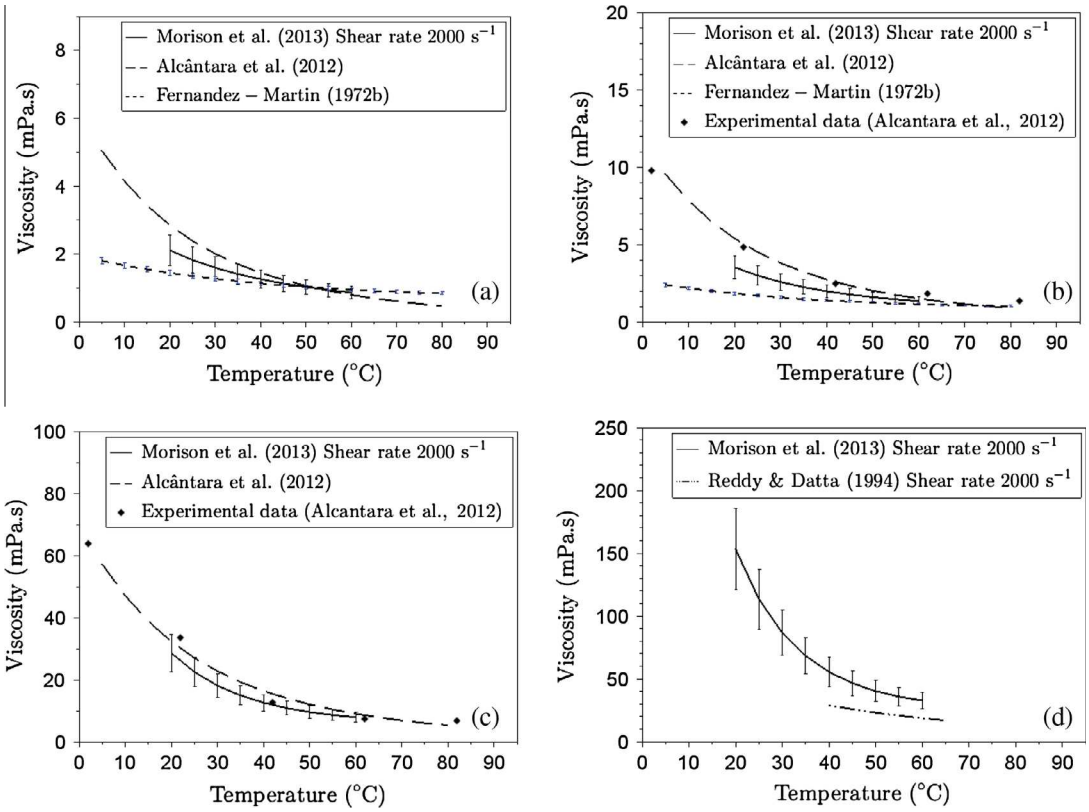

Fig. 11. Viscosity of whole milk (87.1% water, 3.4% fat, 3.1% protein, 5.6% lactose, 0.8% minerals) for 4 different dry matters ((a) 12.9%; (b) 20.0%; (c) 40.0%; (d) 50.0%). The model of Morison et al. (2013) has a prediction error up to 21% represented by error bars, and the model of Fernández-Martín (1972b) fits experimental data within 5%, also represented by error bars.

The comparison between these models should be considered carefully, because viscosity is a rheological property which, when the fluid is non-Newtonian, depends on the shear rate applied to the fluid: the rheological behaviour of milk has been reported by several authors as non-Newtonian above about 30–35% dry matter (for instance Vélez-Ruiz and Barbosa-Cánovas, 1998). The measurement of viscosity may therefore be highly dependent on operating conditions of the experiment, mainly shear rate, which is specified when available, and temperature.

The difference between models was clearly significant at low temperatures for whole milk, as shown in Fig. 11. In the case of skim milk, the gap between the model of Fernández-Martín (1972b) and other models was higher. Experimental data supported the model of Morison et al. (2013) strenuously for both whole and skim milks. Because of the support by experimental data and its widest range of validity, the model of Morison et al. (2013) was chosen. Also, the model seemed to take into account the non-Newtonian behaviour of milk above 30% dry matter (Morison et al., 2013), since the component-specific coefficients A_i (see Table 4) were obtained from experimental data at both low and high dry matter contents. One drawback of the model is that it has been fitted to experimental data taken at a shear rate of 2000 s^{-1}, whereas the shear rate in evaporators is lower (less than 1000 s^{-1} (Ang, 2011)); recent research at the STLO (INRA, Rennes, France) suggests however that at 300 s^{-1}, the shear rate reaches a plateau above which viscosity values remain unchanged. Nevertheless, the model was considered satisfying enough for a first attempt at modelling milk viscosity in evaporators and other unit operations in the milk concentration process.

3.1.6. Surface tension

Several authors developed various models for the prediction of surface tension of milk: Bertsch (1983) developed 3 models, one specific of whole milk, the second specific of skim milk, and the third is a general form adapted for both whole and skim milk; Watson (1958) developed models for raw whole, raw skim, and homogenized whole milk. Ang (2011) developed a model for the prediction of the surface tension of skim milk. In spite of the number of models developed, these models only take into account the dependence with the temperature and none of them develop correlations with concentration. Experimental data of surface tension of various milks with various fat contents were found in the work of Mukherjee et al. (2005). In Paramalingam et al. (2000), surface tension values are given for whole milk at 3 temperatures with 3–6 dry matter values, from which a model, valid between 20 °C and 65 °C and for a dry matter content between 5% and 40% was regressed by the authors (Eq. (2)).

$$\sigma_{\text{Milk,whole}} = 50.085 - 0.179 \times T + 5.781 \times 10^{-4} \times T^2 + 0.0439 \times DM - 0.00627 \times DM^2 - 7.210 \times 10^{-4} \times DM \times T \quad (2)$$

The models of Bertsch (1983 – whole milk model and general model), Paramalingam et al. (2000) and Watson (1958 – raw and homogenized whole milk models) were compared for whole milk at three levels of concentration, although only the regression from the data of Paramalingam et al. (2000) varied with dry matter content (see Fig. 12). Regardless of the model, the trend of the curves was similar, highlighting a decrease in surface tension with the increase in temperature. However, the values were significantly different between the considered models (for instance, a 19% discrepancy was observed when comparing the general model of Bertsch (1983) with the model of Watson (1958) for whole milk at 20 °C). Fig. 12(d) shows a comparison between the models at a constant temperature of 20 °C and varying dry matter content:

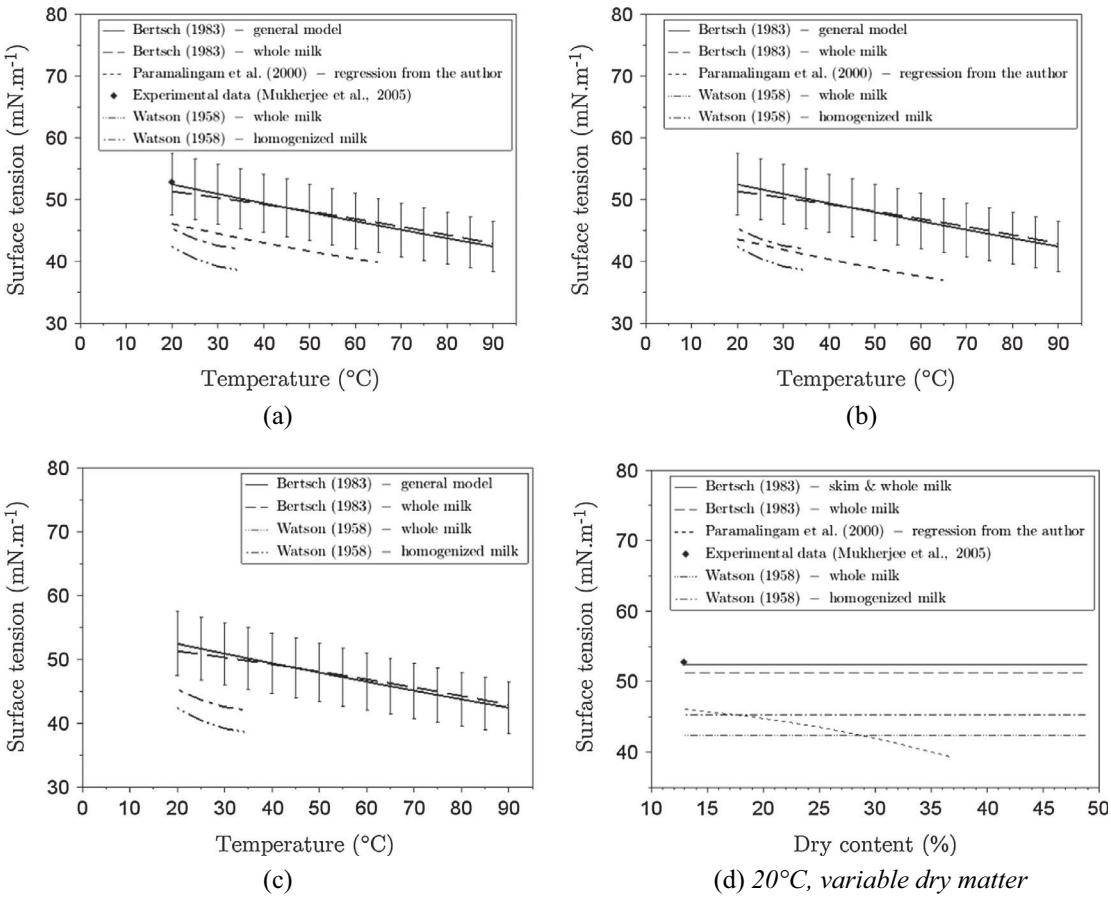

Fig. 12. Surface tension of whole milk (87.0% water, 3.7% fat, 3.7% protein, 5.3% lactose, 0.2% minerals) according to temperature for 3 different dry matters ((a) 13.0%; (b) 25.0%; (c) 50.0%), and according to dry content for temperature fixed at 20 °C (d). The error bars on the data of Bertsch (1983) represent the 9.6% mean relative error calculated by the author.

the gap between the models of Bertsch (1983) and the regression from the data of Paramalingam was significant, particularly at high dry matter, whereas the experimental data from Mukherjee et al. (2005) was closely matched by the models of Bertsch (1983).

The general model of Bertsch (1983) was chosen, because it was supported by the experimental data of Mukherjee et al. (2005) for whole milk, and was valid for both whole and skim milks, although the comparison requires more experimental investigation, with a focus on the surface tension of milk with varying dry matter.

The models previously discussed and selected for each of the six properties are gathered in Table 4.

3.2. Influence of property models on simulation

The results obtained from the sensitivity study in relation to the 6 major properties of milk (heat capacity, BPE, density, thermal conductivity, viscosity and surface tension) are presented in Table 5. The analysis of the response of the pilot process simulation to variation in property values showed that it was mainly sensitive to thermal conductivity, followed by density and viscosity, while surface tension, heat capacity and BPE had response coefficients 20% lower than that of thermal conductivity.

This sensitivity study showed how improvements should be conducted in the case of the simulation of dairy evaporator systems with Aspen Plus and the modelling of milk used in this study: efforts should be focused on the improvement of the modelling of thermal conductivity, density and viscosity of milk.

Table 5
Results of the sensitivity analysis. The numerical values are the coefficients obtained after modelling the response of the system (the pilot concentration process), i.e. the final product concentration, as a function of the factors applied to the variables, i.e. the major properties of milk (see Section 2.4.2). The interactions between variables (λ–ρ, σ–μ, Cp–μ–ρ, etc.) are not relevant in this analysis, because the purpose is to identify the most impacting properties, and the main variables (i.e. the properties) were sufficient to model the simulation response up to 3 digits.

Thermal conductivity (λ)	0.304
Density (ρ)	0.179
Viscosity (μ)	−0.081
Surface tension (σ)	−0.052
Heat capacity (Cp)	0.039
BPE	$-4 \cdot 10^{-4}$
Constant	0.169

3.3. Validation of the modelling tool including selected property models

Once the property models had been selected (Table 4), and had been implemented in Aspen Plus according to the method explained in Section 2.2.2, industrial data and experimental data described in Section 2.3 served as a test bench to validate the modelling approach of the properties of milk within the simulator.

3.3.1. Validation of heat and mass balances

Performing heat and mass balances in Aspen Plus only requires heat capacity and BPE models of milk. The industrial process described in the work of Ribeiro (Ribeiro, 2001; Ribeiro and

Table 6
Simulation and industrial results in the case of the computation of heat and mass balances with the industrial process (Ribeiro, 2001).

Evaporator effects	Outlet concentration (% total solids)			Concentrate temperature (°C)		
	Industrial results (%)	Simulation results (%)	Difference (%)	Industrial results	Simulation results	Difference (%)
Evap-1 & Sep-1	20.51	20.44	<1	66.0	66.2	<1
Evap-2 & Sep-2	25.20	25.16	<1	61.0	61.3	<1
Evap-3 & Sep-3	32.85	33.06	+1	56.0	55.8	<1
Evap-4 & Sep-4	48.00	49.19	+2	46.0	45.1	−2

Table 7
Simulation and experimental results in the case of the computation of heat and mass balances with the pilot-scale evaporator (Silveira et al., 2013).

Concentration experiment	Outlet concentration (% total solids)			Concentrate temperature		
	Experiment (%)	Simulation (%)	Difference (%)	Experiment (°C)	Simulation (°C)	Difference (%)
From 10% to 24% total solids	24	29	+20	60.0	60.6	+1
From 24% to 52% total solids	52	65	+25	60.0	62.6	+4

Table 8
Simulation and experimental results in the case study of the computation of a detailed simulation with the pilot evaporator (Silveira et al., 2013).

Concentration experiment	Outlet concentration (% total solids)			Concentrate temperature		
	Experiment (%)	Simulation (%)	Difference (%)	Experiment (°C)	Simulation (°C)	Difference (%)
From 10% to 24% total solids	24	29	+20	60.0C	60.6	+1
From 24% to 52% total solids	52	48	−9	60.0	61.3	+2

Andrade, 2003) was modelled and simulated in Aspen Plus where the milk property models had been implemented. In Table 6 are given the results for the concentration of milk leaving each evaporator effect and the temperature of the obtained concentrate.

The highest difference between experimental and simulated concentration values was obtained at the highest milk concentrations: differences in concentration and temperature results were both low (maximum 2 points of difference). These results are promising, and showed that in this case the simulation produced results consistent with reality. However, improvements are still needed in heat and mass balances modelling, because a variation of 1% dry matter content in the concentrate leaving the evaporator leads to substantial additional costs in the drying step following evaporation. In the case of the pilot-scale evaporator (results in Table 7), differences were notably higher for the outlet concentration (up to 25%).

Several reasons can be given to explain the differences between the simulation and the industrial/experimental results:

(i) The accuracy of the modelling of the properties of milk itself may be significant. In the case of empirical models, there may be a cumulative error in the modelling of the properties of milk (heat capacity and BPE) that can result from the accuracy of the model regression, from the accuracy of the experimental measurement, or from the conditions in which measurements were conducted, which might not be valid in the case of the simulated concentration process.
(ii) Some phenomena occurring in the process were not taken into account in the simulation, such as flow rate fluctuations, heat losses during the evaporation process, or fouling of the evaporator tubes. Indeed, the present simulation overestimated the performance of the processes, because it did not take into account heat losses and fouling, which both decrease heat transfer, resulting in lower concentration of the final product. In the case of the pilot evaporator in particular, it is assumed that steam transfers all its heating power (8.4 kW per evaporator tube – see Silveira et al., 2013) to the product, which is not the case in reality.
(iii) The given measurements were assumed to be carried out under a "steady-state" regime, which may be practically difficult to reach.

3.3.2. Validation of the simulation including equipment geometry

The detailed simulation (i.e. including the size and geometry of the equipment) of the pilot-scale evaporator (Silveira et al., 2013) was performed in Aspen Plus, so as to validate the modelling approach with the set of the 6 key properties of milk (heat capacity, BPE, thermal conductivity, density, surface tension, viscosity). The results are given in Table 8: temperatures are correctly simulated, whereas high differences in outlet concentration can be observed between simulations and experiments.

Such discrepancies may come from different origins:

- Some physical parameters have not been taken into account for simplification purposes, such as heat losses and fouling. However in this case the outlet concentration should be overestimated in both cases.
- The simulation uses six different property models, therefore cumulating the inaccuracies of each of these models.
- The assumptions for modelling the pilot evaporator may also contain inaccuracies, such as the heat transfer coefficient model, which was developed for the falling film evaporation of pure component liquids (Alhusseini et al., 1998).

Apart from model accuracy, the slight overestimation of the boiling temperature may come from the accuracy of measurement, since the physical variables in the evaporator may vary as slightly as the difference observed between the simulation and experimental data.

4. Conclusion

In order to use the potential of chemical process software tools along with their unit operation models for food applications, a new modelling strategy for liquid food products was proposed. The concentration process of milk by evaporation was selected to illustrate the methodology since it was identified as one of the most energy

intensive operations in the dairy industry. Through the different steps to define and develop models of a liquid food product, several needs in modelling food properties and food processes were identified:

(i) The food product (milk in this case study) was defined as a mixture of water and four dry matter components (fat, proteins, carbohydrates, minerals) modelled as "pseudo-components" in a conventional simulator which was adapted to take into account the behaviour of the liquid food product considered.
(ii) The significant properties of the food product/milk (heat capacity, boiling point elevation, thermal conductivity, density, viscosity, and surface tension) were modelled based on the empirical knowledge (translated into mathematical models) of the variation of product properties as a function of variable parameters of the considered unit operation. In this work, milk properties (heat capacity, boiling point elevation, thermal conductivity, density, viscosity, surface tension) were modelled as a function of temperature, dry matter content and composition. Obviously, this strategy highlighted the necessity to acquire knowledge, in particular about the relationships between the final properties of the product and the operational parameters of the process.
(iii) A sensitivity analysis on the process of interest showed that in this case, thermal conductivity, density and viscosity of milk should be the first targets for improvement from a modelling point of view.
(iv) The final validation of the modelling tool was performed at two levels: on the one hand heat and mass balances of the industrial concentration process gave results matching accurately with industrial values (error $\leqslant$ 2%), thus validating heat capacity and BPE models. On the other hand a more complex approach, which entailed the geometry of the equipment, gave satisfying results for the temperature. However regarding the outlet concentration, a difference of up to 20% between experiment and simulation pointed out the need to improve the heat transfer coefficient model, which has a major impact on simulation results.

Although applied to this case study, this approach was intended to serve as generic. The ambition of this work is to give some guidelines that could be followed for another food product. This strategy also led to the development of a simulation tool dedicated to the modelling and simulation of milk heat treatment and evaporation processes. The built-in unit operation models of the process simulator, or user-developed unit operation models, can be used to simulate a variety of concentration process configurations. Thus, new process designs or new process configurations and operating parameters can be studied, with multiple potential purposes: cost reduction, reduction of the environmental impact by reduction of the energy consumption, and other eco-design scenarios.

Acknowledgements

The authors wish to acknowledge with thanks the contribution of Pierre Schuck and Arlan Silveira from the French National Institute for Agricultural Research (UMR 1253 STLO INRA–Agrocampus Ouest), and Benoit Colin from the French company TGE S.A. (Thermique-Genie Chimique-Evaporation).

Appendix A. Calculation of the liquid activity coefficient of water with BPE

1. The boiling temperature (saturation temperature) of pure water is calculated from the pressure with the Antoine equation:

$$T^{\text{Pure}}_{\text{SAT,Water}} = \frac{B}{(A - \log P)} - C$$

(For water: A = 5.11564, B = 1687.537, C = −42.98).
2. The boiling temperature of water affected by the dissolved dry components of milk is calculated from a BPE model retrieved from the literature (see Table 4), the BPE being a specific property of milk:

$$T^{\text{Mixture}}_{\text{SAT,Water}} = T^{\text{Pure}}_{\text{SAT,Water}} + \text{BPE}$$

3. The activity of water in the mixture is computed from the following theoretical model (Berry et al. (2000)):

$$\text{BPE} = \frac{-R \times T^{\text{Pure}^2}_{\text{SAT,Water}} \times \ln a_{\text{Water}}}{\Delta h_{\text{Vap}}}$$

Therefore:

$$a_{\text{Water}} = exp\left(-\frac{\text{BPE} \times \Delta h_{\text{Vap}}}{R \times T^{\text{Pure}^2}_{\text{SAT,Water}}}\right)$$

with Δh_{Vap} the molar latent heat of vapourization of water at the milk temperature.
4. Since the definition of water activity leads to (Smith, 2011): $a_{\text{Water}} = \gamma_{\text{Water}} \times x_{\text{Water}}$, the activity coefficient of water is computed as: $\gamma_{\text{Water}} = a_{\text{Water}}/x_{\text{Water}}$, x_{Water} being the molar fraction of water in milk.

For dry matter components, γ = 1 is assumed. It is noteworthy that this assumption is inaccurate in the case of dissolved substances, i.e. minerals, lactose and proteins (Walstra et al., 2006). This remains to be improved in further developments of this work, if a more accurate model is required.

Appendix B. Calculation of the overall heat transfer coefficient in the HeatX model of Aspen Plus

Aspen Plus provides an estimation of outlet streams properties and performs iterations until satisfying conditions are reached in outlet streams, therefore there is no need to implement an algorithm for solving the heat transfer coefficient value.

1. Compute average properties of product inside the evaporator; example with heat capacity: $Cp_{\text{average}} = (Cp_{\text{in}} + Cp_{\text{out}})/2$ where Cp_{in} is the heat capacity of the product side inlet stream, and Cp_{out} is the heat capacity of the outlet product stream at the temperature and concentration estimated by Aspen Plus.

Table B.1
Characteristics of the industrial feed streams (milk and steam).

	Composition (mass%)					Flow rate	Vapour	Temperature
	Water %	Fat %	Proteins %	Lactose %	Ash %	(kg/h)	fraction	(°C)
Whole milk feed	87.5	3.8	3.3	4.7	0.7	11351.6	0	7
Steam to effect 1	100					4579.2	1	80
Vapour to effect 2	100					1201.1	1	65.5

Table B.2
Characteristics of the pilot evaporator feed streams (milk and steam).

	Concentration experiment	Composition (mass%)					Flow rate	Vapour	Temperature
		Water %	Fat %	Proteins %	Lactose %	Ash %	(kg/h)	fraction	(°C)
Skim milk feed	10–24% DM	90.4	0.3	3.4	4.8	1.1	50		60
	24–52% DM	76.0	0.7	8.6	12.0	2.6	50		60
Steam		100					13	1	75

Table B.3
Unit operations parameters specified in Aspen Plus for heat and mass balances computation with the industrial process.

	Pre-heaters		Pasteurizer	Holding tubes	Evaporator effects							
	HX-1	HX-2	Past-1	STank	Evap-1	Sep-1	Evap-2	Sep-2	Evap-3	Sep-3	Evap-4	Sep-4
Constraints (industrial data)												
Cold side												
Outlet temperature (°C)	45	65	88									
Temperature difference				−17								
Outlet pressure (kPa)	101.325	101.325	101.325	0	26.14	0	20.87	0	16.11	0	9.32	0
Hot side												
Outlet temperature (°C)	42	65.5			70		62		58.5		51	
Outlet pressure (kPa)			101.325		47.36		25.6		20.89		16.18	
Heat duty (W)						0		0		0		0

Table B.4
Unit operations parameters specified in Aspen Plus for heat and mass balances computation with the pilot evaporator.

	Evaporator vessels					
	F1-A	Sep-A	F1-B	Sep-B	F1-C	Sep-C
Constraints						
Cold side						
Outlet pressure (kPa)	20		20		20	
Hot side						
Temperature change	0		0		0	
Outlet vapour fraction	0		0		0	
Heat duty (W)		0		0		0

2. Compute wavy-laminar contribution according to Alhusseini et al. (1998):

$$h^{+}_{\text{laminar}} = 2.65 \times Re^{-0.158} \times Ka^{0.0563}$$

3. Compute turbulent contribution according to Alhusseini et al. (1998):

$$h^{+}_{\text{turbulent}} = \frac{Pr \times \delta^{1/3}}{(A_1 \times Pr^{1/3} + A_2 \times Pr^{0.5} + A_3 \times Pr^{0.25} + C) + (B \times Ka^{0.5} \times Pr^{0.5})}$$

With:

$$A_1 = 9.17; A_2 = 0.328 \times \pi \times (130 + \delta)/\delta;$$

$$A_3 = 0.0289 \times (152,100 + 2340 \times \delta + 7 \times \delta)/\delta^2;$$

$$B = 2.51 \times 10^6 \times \delta^{0.333} \times Ka^{-0.173}/Re^{\left(3.49 \times Ka^{0.0675}\right)};$$

$$C = 8.82 + 0.0003 \times Re; \quad \delta = 0.0946 \times Re^{0.8}$$

Table B.5
Unit operations parameters specified in Aspen Plus for detailed simulation in the case study of the pilot evaporator.

		Vacuum valves	Evaporator vessels			Separators
		Vac-A to Vac-C	F1-A	F1-B	F1-C	Sep-A to Sep-C
Constraints						
Cold side	Outlet pressure (kPa)	20	20	20	20	20
	Film Coefficients			Calculated from geometry		
Hot side	Pressure drop			Calculated from geometry		
	Film Coefficients			Calculated from geometry		
Heat duty (W)						0
Evaporator (HeatX) specifications						
Hot fluid				In Shell		
Flow direction				Counter-current		
U methods				Film coefficients		
TEMA shell type (standard)				E – One pass shell		
Exchanger orientation				Vertical		
Direction of tube side flow				Down		
Inside shell diameter (mm)			121	80	80	
Tubes characteristics	Length (m)		4	4	4	
	Material			TP-304 stainless steel		
	Inner diameter (mm)		36	24	24	
	Tube thickness (mm)		1	1	1	

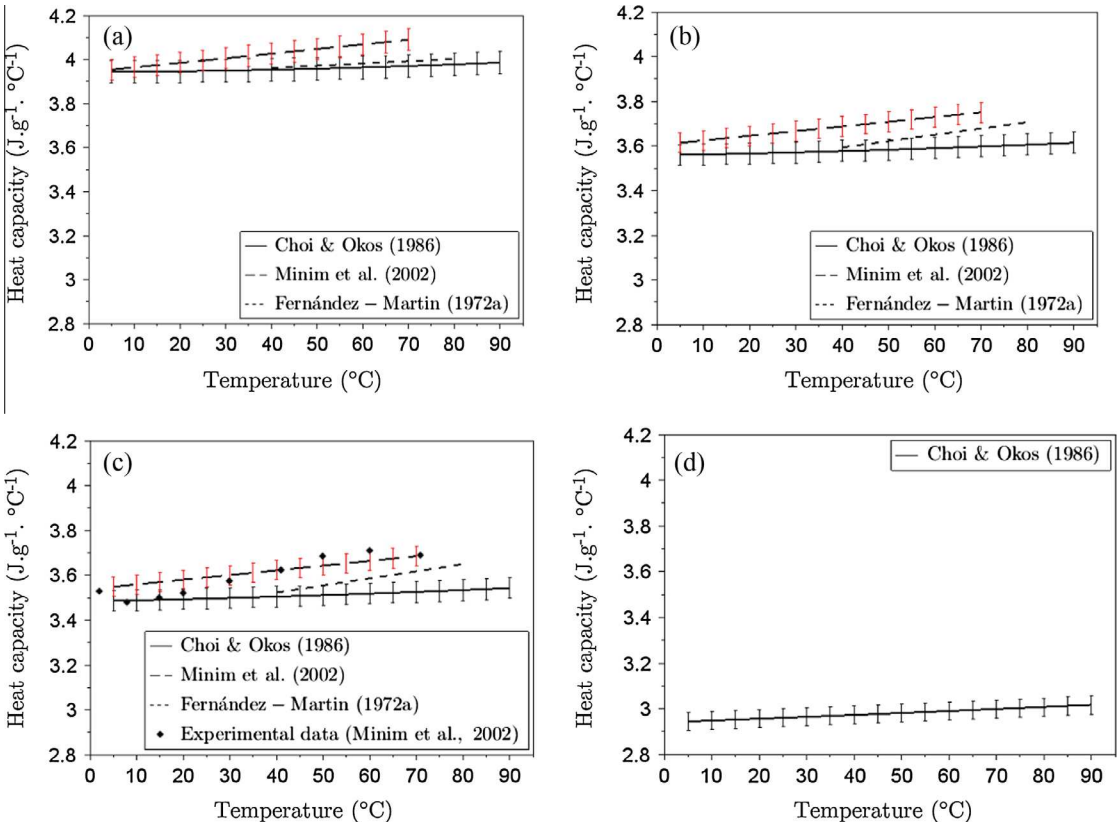

Fig. C.1. Heat capacity of skim milk (90.7% water, 0.4% fat, 3.5% protein, 4.8% lactose, 0.7% minerals) as a function of with temperature for 4 different dry matter contents ((a) 9.4%; (b) 25.0%; (c) 28.0%; (d) 50.0%).

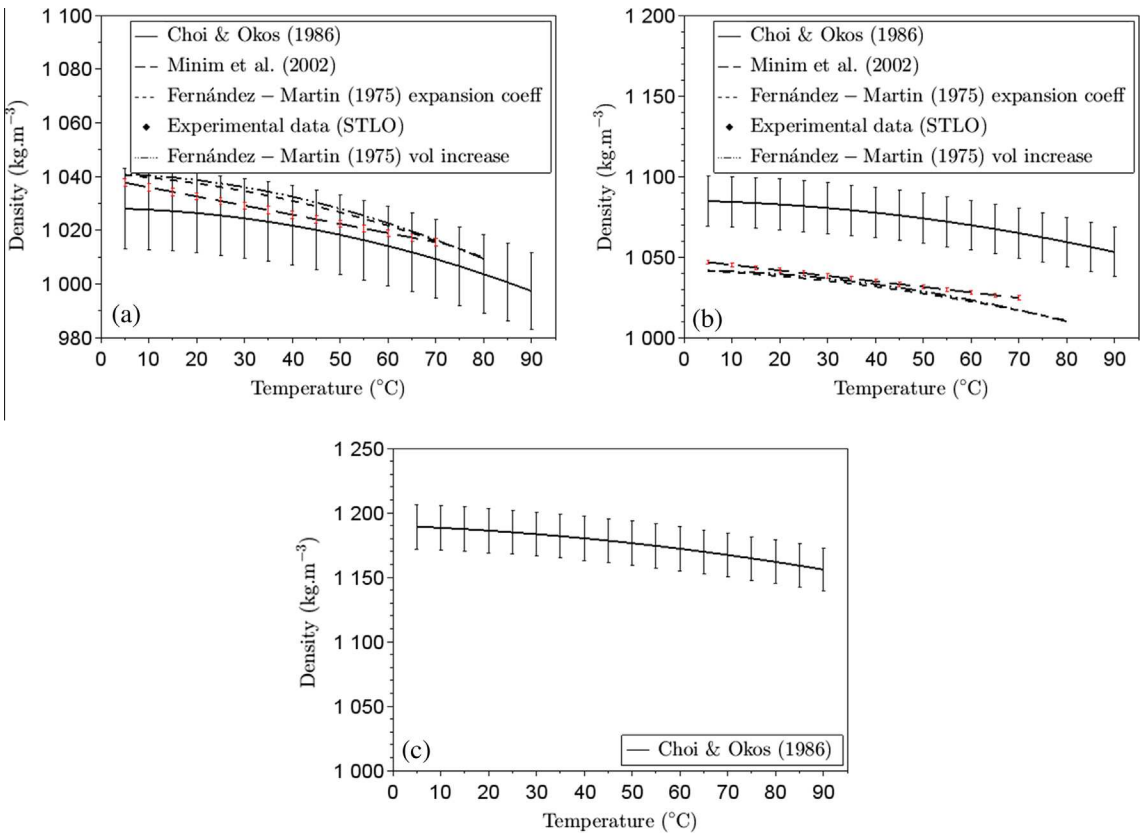

Fig. C.2. Density of skim milk (90.7% water, 0.4% fat, 3.5% protein, 4.8% lactose, 0.7% minerals) as a function of temperature for 3 different dry matter contents ((a) 9.3%; (b) 25.0%; (c) 50.0%).

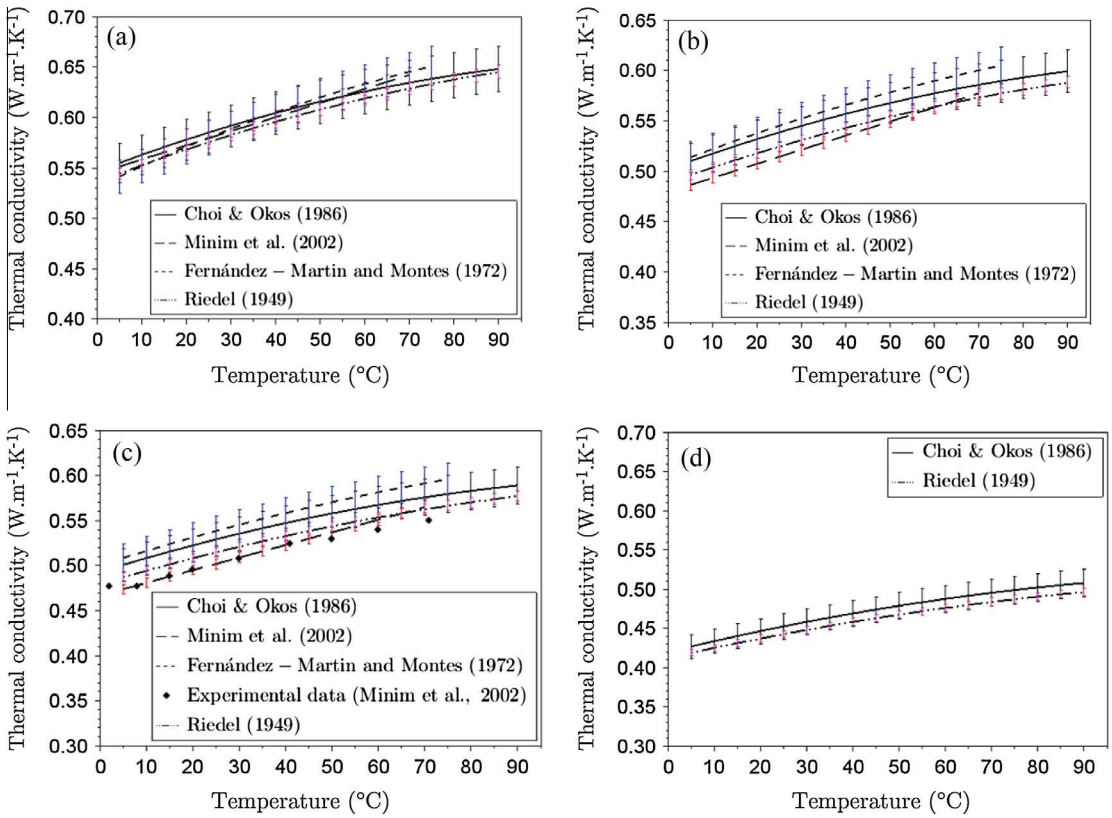

Fig. C.3. Thermal conductivity of skim milk (90.7% water, 0.4% fat, 3.5% protein, 4.8% lactose, 0.7% minerals) as a function of temperature for 4 different dry matter contents ((a) 9.4%; (b) 25.0%; (c) 28.0%; (d) 50.0%).

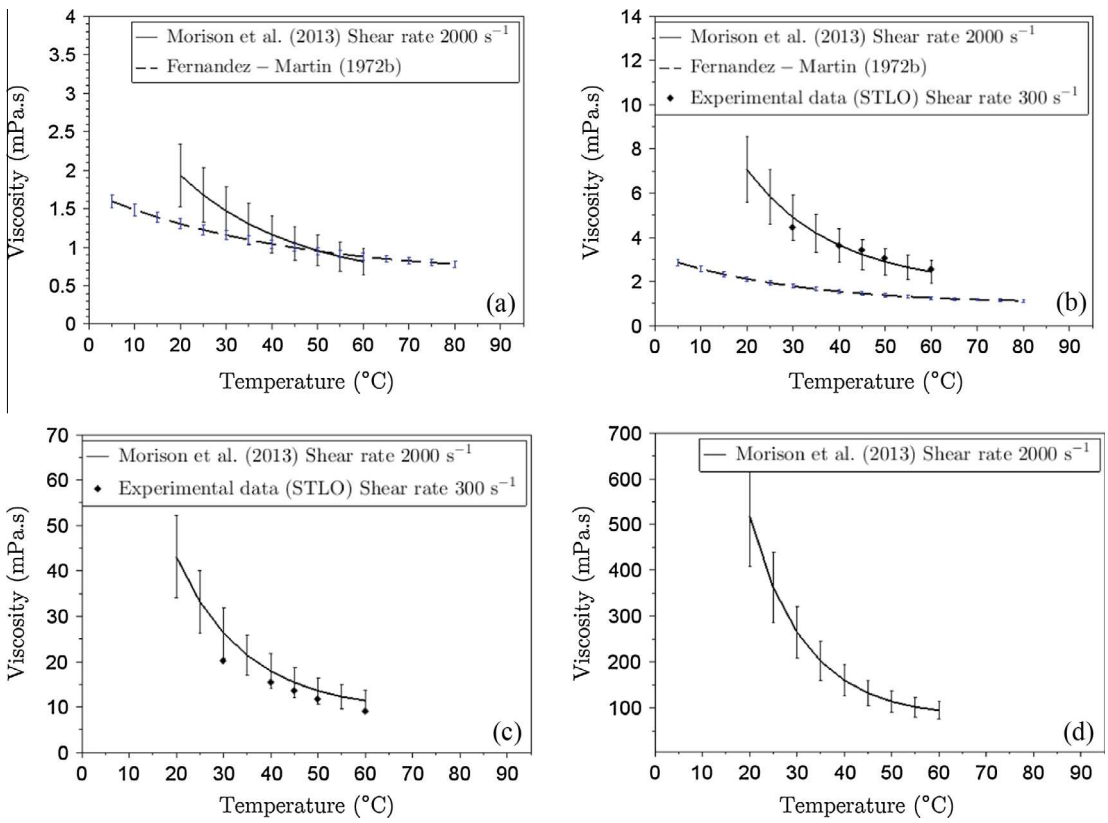

Fig. C.4. Viscosity of skim milk (90.5% water, 0.5% fat, 3.5% protein, 4.9% lactose, 0.7% minerals) as a function of temperature for 4 different dry matter contents ((a) 9.5%; (b) 23.8%; (c) 37.6%; (d) 50.0%).

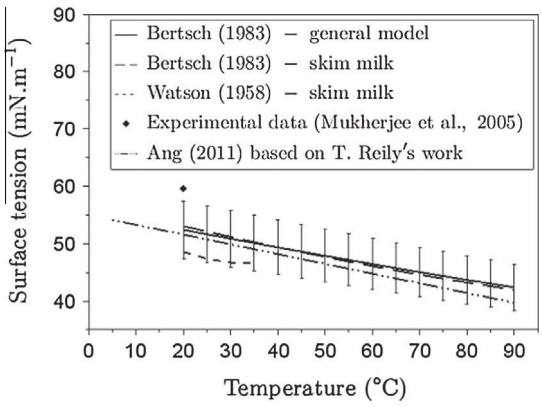

Fig. C.5. Surface tension of skim milk (90.0% water, 0.5% fat, 3.9% protein, 5.5% lactose, 0.2% minerals) as a function of temperature for 10% dry matter content.

4. Total contribution of wavy-laminar term and turbulent term is:

$$h^{+} = \left(h^{+}_{\text{laminar}}{}^{5} + h^{+}_{\text{turbulent}}{}^{5}\right)^{\frac{1}{5}}$$

5. Compute product side heat transfer coefficient:

$$h_{\text{milk}} = h^{+} \times \lambda_{\text{avg}} \times \left(\left(\mu_{\text{avg}}/\rho_{\text{avg}}\right)^{2}/g\right)^{-1/3}$$

where λ_{avg}, μ_{avg} and ρ_{avg} are respectively the average thermal conductivity, viscosity and density of the product. g is the gravitational acceleration.

6. Compute average properties of steam inside the evaporator.
7. Compute steam side heat transfer coefficient (Earle and Earle, 1983):

$$h_{\text{steam}} = 0.943 \times \left.\frac{\rho^{2}_{\text{avg}} \times \lambda^{3}_{\text{avg}} \times g \times \Delta h_{\text{cond}}}{\mu_{\text{avg}} \times \left(T_{\text{shell,avg}} - T_{\text{wall,avg}}\right) \times L}\right)^{0.25}$$

where λ_{avg}, μ_{avg} and ρ_{avg} are respectively the average thermal conductivity, viscosity and density of the condensate film. Δh_{cond} is the average condensate enthalpy, $T_{\text{shell,avg}}$ is the average temperature in the steam side of the evaporator, and $T_{\text{wall,avg}}$ is the average wall temperature of the tube, approximated as the average temperature between the average steam side temperature and the average product side temperature. L is the tube length.

8. Compute overall heat transfer coefficient:

$$U = \left(\frac{1}{h_{\text{milk}}} + \frac{1}{h_{\text{steam}}} + \frac{\varepsilon}{\lambda}\right)^{-1}$$

where ε is the tube thickness and λ is the tube material thermal conductivity.

Appendix C. Process and unit operation parameters in Aspen Plus

See Tables B.1–B.5.

Appendix D. Comparison of property models for skim milk

See Figs. C.1–C.5.

References

Alcântara, L.A.P., Fontan, R. da C.I., Bonomo, R.C.F., Souza Jr., E.C.de, Sampaio, V.S., Pereira, R.G., 2012. Density and dynamic viscosity of bovine milk affected by temperature and composition. Int. J. Food Eng. 8 (11).

Alhusseini, A.A., Tuzla, K., Chen, J.C., 1998. Falling film evaporation of single component liquids. Int. J. Heat Mass Transf. 41 (12), 1623–1632.

Ang, K.L.J., 2011. Investigation of rheological properties of concentrated milk and the effect of these properties on flow within falling film evaporators (M.Sc. Thesis). University of Canterbury. Department of Chemical and Process Engineering.

APV, 2006. Evaporator Handbook (fourth ed.). Tonawanda, USA.

Aspen Technology, 2011. Aspen Plus Help. 200 Wheeler Road – Burlington, MA 01803–5501 – USA: Aspen Technology Inc.

Azapagic, A., Perdan, S., Clift, R., 2011. Sustainable Development in Practice: Case Studies for Engineers and Scientists, second ed. Wiley Online Library, West Sussex, England.

Berry, R.S., Rice, S.A., Ross, J., 2000. Physical Chemistry, second ed. Oxford University Press, New York.

Bertsch, A.J., 1983. Surface tension of whole and skim-milk between 18 and 135 C. J. Dairy Res. 50 (03), 259–267.

Bon, J., Clemente, G., Vaquiro, H., Mulet, A., 2010. Simulation and optimization of milk pasteurization processes using a general process simulator (ProSimPlus). Comput. Chem. Eng. 34 (3), 414–420.

Byluppala, H., 2010. Process design and simulation for extraction of milk fat using liquid propane (M.Sc. Thesis). Oklahoma State University.

Carson, J.K., 2006. Review of effective thermal conductivity models for foods. Int. J. Refrig 29 (6), 958–967.

Chawankul, N., Chuaprasert, S., Douglas, P., Luewisutthichat, W., 2001. Simulation of an agitated thin film evaporator for concentrating orange juice using AspenPlusTM. J. Food Eng. 47 (4), 247–253.

Cheng, H., Friis, A., 2007. Operability and flexibility of a milk production line. Food Bioprod. Process. 85 (4), 372–380.

Choi, Y., Okos, M., 1986. Effects of temperature and composition on the thermal properties of foods. Food Eng. Process Appl. 1, 93–101.

Croguennec, T., Jeantet, R., Brulé, G., 2008. Fondements physicochimiques de la technologie laitière. Lavoisier Tec & Doc, Paris, France.

Decloux, M., Rémond, B., 2009. Évaporation – Agencement des évaporateurs et applications. Techniques de L'ingénieur. Agroalimentaire F2 (F3004), 1–19.

Diefes, H.A., 1997. A steady-state food process design and analysis program with generalized unit operation models (Ph.D. Thesis). Purdue University, West Lafayette.

Earle, R.L., Earle, M.D., 1983. Unit Operations in Food Processing (Web). NZIFST (The New Zealand Institute of Food Science & Technology).

Fernández-Martín, F., 1972a. Influence of temperature and composition on some physical properties of milk and milk concentrates. I. Heat capacity. J. Dairy Res. 39 (01), 65–73.

Fernández-Martín, F., 1972b. Influence of temperature and composition on some physical properties of milk and milk concentrates. II. Viscosity. J. Dairy Res. 39 (01), 75–82.

Fernández-Martín, F., 1975. Influence of temperature and composition on some physical properties of milk and milk concentrates. IV. Thermal expansion. Zeitschrift Für Lebensmittel-Untersuchung Und. Forschung 157 (1), 14–18.

Fernández-Martín, F., Montes, F., 1972. Influence of temperature and composition on some physical properties of milk and milk concentrates. III. Thermal conductivity. Milchwissenschaff 12, 772–776.

Fito, P., LeMaguer, M., Betoret, N., Fito, P.J., 2007. Advanced food process engineering to model real foods and processes: the "SAFES" methodology. J. Food Eng. 83 (2), 173–185.

Fox, P., Brodkorb, A., 2008. The casein micelle: historical aspects, current concepts and significance. Int. Dairy J. 18 (7), 677–684.

French Ministry of Agriculture, Food and Forestry, 2011. Les consommations d'énergie dans les industries agricoles alimentaires et les scieries en 2010. Retrieved from <http://agreste.agriculture.gouv.fr/publications/chiffres-et-donnees/article/les-consommations-d-energie-dans-6820>.

French-McCay, D.P., 2004. Oil spill impact modeling: development and validation. Environ. Toxicol. Chem. 23 (10), 2441–2456.

Fuquay, J.W., Fox, P.F., McSweeney, P.L. (Eds.), 2011. Encyclopedia of Dairy Sciences, second ed. Academic Press, London, Oxford, San Diego.

Gaucheron, F., 2005. The minerals of milk. Reprod. Nutr. Dev. 45 (4), 473–484.

Greenfield, H., Southgate, D.A.T., 2003. Food composition data. Food and Agriculture Organization of the United Nations (FAO), Rome, Italy. Retrieved from <http://www.fao.org/docrep/008/y4705e/y4705E00.htm#Contents>.

Heldman, D.R., Lund, D.B. (Eds.), 2006. Handbook of Food Engineering. CRC press, Boca Raton, U.S.A.

Jorge, L.M.M., Righetto, A.R., Polli, P.A., Santos, O.A.A., Filho, R.M., 2010. Simulation and analysis of a sugarcane juice evaporation system. J. Food Eng. 99 (3), 351–359.

Lam, H.L., Klemes, J.J., Kravanja, Z., Varbanov, P.S., 2011. Software tools overview: process integration, modelling and optimisation for energy saving and pollution reduction. Asia-Pac. J. Chem. Eng. 6 (5), 696–712.

Lambert, C., Romdhana, H., Courtois, F., 2013. Towards a generic simulator for food processes: bridging the gap between chemical engineering and food engineering. Récents Progrès En Génie Des Procédés, 104.

Lewicki, P.P., 2004. Water as the determinant of food engineering properties. A review. J. Food Eng. 61, 483–495.

Minim, L.A., Coimbra, J.S.R., Minim, V.P.R., Telis-Romero, J., 2002. Influence of temperature and water and fat contents on the thermophysical properties of milk. J. Chem. Eng. Data 47 (6), 1488–1491.

Miranda, V., Simpson, R., 2005. Modelling and simulation of an industrial multiple effect evaporator: tomato concentrate. J. Food Eng. 66 (2), 203–210.

Morison, K.R., Phelan, J.P., Bloore, C.G., 2013. Viscosity and non-newtonian behaviour of concentrated milk and cream. Int. J. Food Prop. 16 (4), 882–894.
Mukherjee, N., Bansal, B., Chen, X.D., 2005. Measurement of surface tension of homogenised milks. Int. J. Food Eng. 1 (2).
Oldfield, D.J., Taylor, M.W., Singh, H., 2005. Effect of preheating and other process parameters on whey protein reactions during skim milk powder manufacture. Int. Dairy J. 15 (5), 501–511.
Paramalingam, S., Winchester, J., Marsh, C., 2000. On the fouling of falling film evaporators due to film break-up. Food Bioprod. Process. 78 (2), 79–84.
Reddy, C.S., Datta, A., 1994. Thermophysical properties of concentrated reconstituted milk during processing. J. Food Eng. 21 (1), 31–40.
Ribeiro, C.P., 2001. Modelling of plate heat-transfer systems and simulation of a Brazilian milk powder plant (M.Sc. Thesis). Universidade Federal de Minas Gerais, Belo Horizonte, Brasil.
Ribeiro, C.P., Andrade, M.H.C., 2002. A heat transfer model for the steady-state simulation of climbing-falling-film plate evaporators. J. Food Eng. 54 (4), 309–320.
Ribeiro, C.P., Andrade, M.H.C., 2003. Performance analysis of the milk concentrating system from a Brazilian milk powder plant. J. Food Process Eng 26 (2), 181–205.
Riedel, L., 1949. Thermal conductivity measurements on sugar solutions, fruit juices and milk. Chem.-Ing.-Tech. 21 (17), 340–341.
Silveira, A.C.P., de Carvalho, A.F., Perrone, Í.T., Fromont, L., Méjean, S., Tanguy, G., Schuck, P., 2013. Pilot-scale investigation of effectiveness of evaporation of skim milk compared to water. Dairy Sci. Technol. 93 (4–5), 537–549.
Singh, H., Creamer, L.K., 1991. Denaturation, aggregation and heat stability of milk protein during the manufacture of skim milk powder. J. Dairy Res. 58 (03), 269–283.
Skoglund, T. (2007). Dynamic modelling and simulation of liquid food process lines (Ph.D. Thesis). Lund University, Sweden.
Smith, P.G., 2011. Introduction to Food Process Engineering, second ed. Springer, New York.
Steiner, D., Taborek, J., 1992. Flow boiling heat transfer in vertical tubes correlated by an asymptotic model. Heat Transfer Eng. 13 (2), 43–69.
Sun, D.-W., Hu, Z., 2003. CFD simulation of coupled heat and mass transfer through porous foods during vacuum cooling process. Int. J. Refrig 26 (1), 19–27.
Tomasula, P.M., Yee, W.C.F., McAloon, A.J., Nutter, D.W., Bonnaillie, L.M., 2013. Computer simulation of energy use, greenhouse gas emissions, and process economics of the fluid milk process. J. Dairy Sci. 96 (5), 3350–3368.
Trystram, G., 2012. Modelling of food and food processes. J. Food Eng. 110 (2), 269–277.
Vélez-Ruiz, J., Barbosa-Cánovas, G., 1998. Rheological properties of concentrated milk as a function of concentration, temperature and storage time. J. Food Eng. 35 (2), 177–190.
Walstra, P., Wouters, J.T., Geurts, T.J., 2006. Dairy Science and Technology, second ed. Taylor & Francis, Boca Raton.
Watson, P.D., 1958. Effect of variations in fat and temperature on the surface tension of various milks. J. Dairy Sci. 41 (12), 1693–1698.
Winchester, J. (2000). Model based analysis of the operation and control of falling film evaporators (Ph.D. Thesis). Massay University, Palmerston North, New Zealand.
You, F., Tao, L., Graziano, D.J., Snyder, S.W., 2012. Optimal design of sustainable cellulosic biofuel supply chains: Multiobjective optimization coupled with life cycle assessment and input-output analysis. AIChE J. 58, 1157–1180.
Zhang, Y., Munir, M.T., Yu, W., Young, B.R., 2014. Development of hypothetical components for milk process simulation using a commercial process simulator. J. Food Eng. 121, 87–93.