HAL open science

Hierarchical Performance Analysis of Uncertain Large Scale Systems using Uncertain Phase IQC Characterization

Khaled Laib, Anton Korniienko, Gérard Scorletti, Florent Morel

To cite this version:

Khaled Laib, Anton Korniienko, Gérard Scorletti, Florent Morel. Hierarchical Performance Analysis of Uncertain Large Scale Systems using Uncertain Phase IQC Characterization. [Technical Report] Laboratoire Ampère. 2015. hal-01198999

HAL Id: hal-01198999

https://hal.science/hal-01198999v5

Submitted on 17 Feb 2016

HAL is a multi-disciplinary open access archive for the deposit and dissemination of scientific research documents, whether they are published or not. The documents may come from teaching and research institutions in France or abroad, or from public or private research centers.

L'archive ouverte pluridisciplinaire **HAL**, est destinée au dépôt et à la diffusion de documents scientifiques de niveau recherche, publiés ou non, émanant des établissements d'enseignement et de recherche français ou étrangers, des laboratoires publics ou privés.

Hierarchical Performance Analysis of Uncertain Large Scale Systems using Uncertain Phase IQC Characterization.

Khaled Laib, Anton Korniienko, Gérard Scorletti and Florent Morel

École Centrale de Lyon, 69134 Ecully Cedex, France.

{khaled.laib@doctorant.ec-lyon.fr, anton.korniienko@ec-lyon.fr, gerard.scorletti@ec-lyon.fr, florent.morel@ec-lyon.fr}

Abstract

In this report, we investigate the performance analysis of uncertain large scale systems. Due to their complexity, the usual robustness analysis methods based on e.g: μ or Integral Quadratic Constraints (IQC) cannot be practically applied. In order to address this problem, in [1], we propose to represent a large scale system as an interconnection of sub-systems and to perform a hierarchical analysis by propagating the IQC characterization of each uncertain sub-system through the interconnection. For a given computational time, the conservatism of the analysis dramatically depends on the class of IQC under consideration. In this report, we propose a new class of IQC which characterizes the phase of uncertain system. An application to the robustness analysis of a PLL network reveals that the use of this class of IQC improves the trade-off between conservatism and computation time.

Keywords Uncertain large scale system, phase uncertainty, robustness analysis, cone sector, hierarchical approach, convex optimisation

1 Introduction

Large scale systems (LSS) such as networks or interconnected systems have become important nowadays. With the technological development and the miniaturization of components, high complexity systems are designed in order to achieve a high level of performance, see e.g. Phase Locked Loop (PLL) networks in synchronous multi-core microprocessor systems [2,3]. However, during the fabrication process, technological dispersions, system ageing, *etc.* could dramatically affect the performance level: so it is crucial to a priori ensure that the desired level of performance is obtained when the system is realized. Since the first step of the design is to obtain a mathematical model of the system, the differences between the realized system and the model can be expressed as an uncertain model. Ensuring a certain level of performance then reduces to a worst case performance analysis problem (robustness analysis). Robustness analysis investigates the stability and the performance of uncertain Linear Time Invariant (LTI) models. Within this framework, even if the underlying problem is NP hard, many efficient methods were developed based on relaxations as convex optimization problem under Linear Matrix Inequality (LMI) constraints [4], see e.g. the μ upper bound [5] in the μ-analysis approach [6] or the Integral Quadratic Constraint (IQC) approach [7].

Nevertheless, these methods can not be practically applied to uncertain large scale systems, since the computation time of the robustness analysis becomes dramatically important.

In order to avoid the direct μ-analysis approach and to reduce the computational load, many techniques are used depending on the nature of the interconnection topology: normal [8] or unitarily diagonalized [9] and [10] (with a normal adjacency matrix). In these works, the authors exploit the particular structure of the interconnection topology and IQC characterization of sub-systems and/or interconnections to derive scalable robust stability conditions. In [11], the authors propose scalable stability test based on Nyquist-like conditions. However, it could be applied only for SISO interconnected systems. An interesting approach is proposed in [12] and [13] where the authors exploit the sparse structure of the interconnection. Based on an IQC characterization of the interconnection, a sparse frequency dependent LMI condition is obtained ensuring robust global stability. This condition can be then solved efficiently based on Cholesky factorization techniques [14] assuming a chordal patterns for interconnection topology. However, it could be difficult, for a given LSS, to

model it with an interconnection which has a chordal pattern especially if, besides the stability, global system performance is under consideration.

In this report we rather propose an alternative to [12] and [13] approach for robust performance analysis of LSS without any assumption on the interconnection topology: *Hierarchical approach*. Initially introduced by Safonov [15], it exploits a hierarchical structure of the interconnection and splits the overall analysis problem into several low dimensional problems. The coupling between these problems is ensured by appropriate IQC conditions such that it implies overall system robust analysis result including stability and performance.

According to the hierarchical approach, a large scale system is represented as a tree with leafs (an interconnection of N systems). Each system j can be described as the interconnection of sub-systems which are the leafs of system j and so on until having sub-systems that can only be described as the certain interconnection of parametric or dynamical uncertainties. Since the effect of an uncertainty and a level of (e.g. H_∞) performance can be expressed as Integral Quadratic Constraints on input-output signals, the hierarchical approach consists on the recursive propagation of the IQC of the uncertainties to the IQC which defines the performance of the large scale system *i.e.* propagate the local input-output behaviour evaluated using IQC through the network layer by layer, see [1, 16] for the details. Even if the hierarchical robustness analysis is possibly more conservative than the usual one, the benefit is to reduce the computational time. Furthermore, in order to perform the propagation, it is necessary to compute a set of IQC satisfied by the input and output of an interconnection whose sub-systems are defined by a set of IQC. A set of IQC is generated by combining elementary classes of IQC. In [1, 16], we investigate the computation of different classes of IQC. Nevertheless, these classes were not adapted for describing (uncertain) phase which is crucial e.g. in vibration control applications. In this report, in order to improve the trade-off between the conservatism and the computation time of the hierarchical approach, we investigate the computation of an IQC corresponding to the phase information of an interconnection of sub-systems. If the phase of a Single Input Single Output (SISO) system can be easily defined, its definition for a Multiple Input Multiple Output (MIMO) system is more difficult. To address this problem, researchers had defined many concepts such as principal phases [17], phase spread [18], phase matching [19], multi-variable phase

margin [20], phase envelope [21], phase sensitive structured value [22] and structured phase margins [23].

In this report, we reveal that the definition based on the numerical range of a complex matrix Γ [18] is a nice candidate to evaluate the uncertain phase since it can be expressed as a quadratic constraint on z and w with $z = \Gamma w$. In [22], the authors consider that each uncertainty block can be phase characterized inside a cone sector and then investigate the stability according to those phase information. The uncertainty phase characterization of [22] can be seen as a special case of the phase characterization presented in this report in the sense that for the phase rotation a matrix is used rather than a scalar in [22]. The advantage of this rotation matrix is to allow to characterize the phase uncertainty according to any point in the complex plane and not just the origin as in [22]. In this report, the problem considered is different and more challenging than the robust stability analysis with phase information considered in [22].

In the case of SISO transfer function, the proposed definition reduces to the usual one. Furthermore, using the separation of graph theorem [24], we reveal that an IQC corresponding to the phase information of an interconnection of sub-systems can be computed using quasiconvex optimization involving LMI constraints. We then use the proposed IQC in order to reduce the conservatism of the hierarchical analysis of a PLL network.

This report is organized as follows: Section 2 presents the problem formulation of the uncertain phase characterization. Some preliminary background is presented followed by the proposed approach in Section 3 and Section 4. The main results are presented in Section 5 with some illustrative examples in Section 6. The advantage of using the phase uncertainty to perform the hierarchical analysis on a PLL network is illustrated in Section 7.

Notations $\mathbb{RH}_\infty^{n\times m}$ denotes the set of matrices rational transfer functions with m inputs and n outputs. A^* (respectively A^T) is the complex conjugate (respectively transpose) of a the matrix A. $Re(A)$ (respectively $Re(x)$) represents the real part of a complex matrix A (respectively the complex vector x) and $Im(A)$ (respectively $Im(x)$) represents the imaginary part. To simplify the notations, $A^{\mathbb{R}}$ (respectively $x^{\mathbb{R}}$) will be used to denote the real part and $A^{\mathbb{I}}$ (respectively $x^{\mathbb{I}}$) for the imaginary part. I_n and $0_{n\times n}$ is the iden-

tity and the zero matrices respectively, when their dimensions are not specified, it is assumed they are know from the context. The $\star$ denotes the Redheffer star product [25]: $\Delta \star M = M_{22} + M_{21}\Delta\left(I - M_{11}\Delta\right)^{-1} M_{12}$. $\mathbf{bdiag}(A, B, \dots)$ denotes the block diagonal matrix whose diagonal blocks are $A, B, \dots$.

2 Problem formulation

Let be the uncertain system $\mathcal{G} = \{\Delta \star M | \Delta \in \underline{\mathbf{\Delta}}\}$, that is, an uncertain system is represented as the interconnection of a certain part $M \in \mathbb{RH}_\infty^{(n_z+n_q)\times(n_w+n_p)}$ and an uncertain part $\Delta \in \underline{\mathbf{\Delta}}$ where $\underline{\mathbf{\Delta}}$ denotes the set of uncertainties traditional in robust analysis literature:

$$\underline{\mathbf{\Delta}} = \left\{ \Delta \;\middle|\; \begin{array}{l} ||\Delta||_\infty < 1 \\ \Delta = \mathbf{bdiag}(\delta_1^r I_{r_1}, \dots, \delta_{n_r}^r I_{r_{n_r}}, \\ \qquad\qquad , \delta_1^c I_{c_1}, \dots, \delta_{n_c}^c I_{c_{n_c}}, \\ \qquad\qquad\qquad , \Delta_1, \dots, \Delta_{n_f}) \end{array} \right\}$$

where

- $\delta_j^r \in \mathbb{R}$ is a real r_j times repeated uncertainty,
- $\delta_j^c \in \mathbb{C}$ is a complex c_j times repeated uncertainty,
- $\Delta_j \in \mathbb{C}^{k_l^j \times k_m^j}$ is a full block of complex uncertainties.

see Fig. 1. In the sequel, for the sake of briefness, the uncertain system is denoted $\Delta \star M$. Furthermore, for a given frequency ω_0, let us denote $\mathcal{G}_{\omega_0}$ the set $\{\Delta(j\omega_0) \star M(j\omega_0) \mid \Delta \in \underline{\mathbf{\Delta}}\}$.

The numerical range of a complex matrix Γ, denoted $\mathcal{N}(\Gamma)$, can be used to define the phase of MIMO systems. It is defined to be a compact and convex set of $\mathbb{C}$ given by [18]:

$$\mathcal{N}(\Gamma) = \{w^* z \mid z = \Gamma w, w \in \mathbb{C}^{n_w} \;\text{ and }\; \|w\| = 1\} \tag{1}$$

In the case of a MIMO system G, Γ represents the frequency response of G at the frequency ω_0. In order to define the phase of an uncertain MIMO system $\Delta \star M$, the numerical range is extended to the union of the numerical ranges $\mathcal{N}\left(G(j\omega_0)\right)$ for any $G \in \mathcal{G}$ which will be referred to as *union of numerical ranges*. Let us define in the complex plane the cone sector as the sector containing all these numerical ranges. It is defined by a spread angle α and

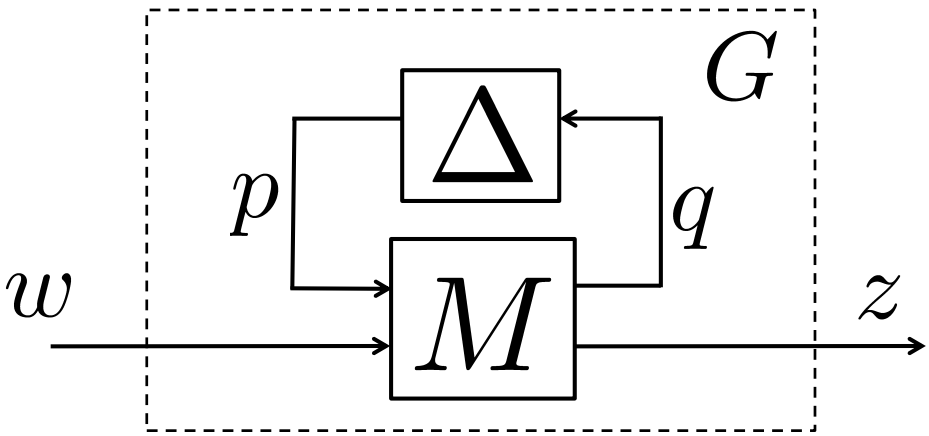

Figure 1: Uncertain linear system

the angle γ measured between the bisectrix of α and the real axe direction, see Fig. 2 where a sampling of the set of numerical ranges, for a given frequency ω_0, and the cone sector with a centre at the origin are represented. For any numerical range $\mathcal{N}(\Gamma)$ which is not contained in the right half plane, one can make $\mathcal{N}(\Gamma)$ rotated by an angle $-\gamma$ such that the resulting numerical range $\mathcal{N}(e^{-j\gamma}\Gamma)$ will be centred around the real axis in the right half plane with a new $\tilde{\gamma} = 0$. To improve the flexibility of the results, this rotation $e^{-j\gamma}$ can be generalized to be an homothetic transformation and a rotation using a scaling matrix $\Omega \in \mathbb{C}^{n_z \times n_w}$. The resulting numerical range is $\mathcal{N}(\Omega^*\Gamma)$ and it belongs to the sector centred at the origin with an angle spread α denoted $sec(0, \alpha)$. This scaling matrix is a generalization of the rotation introduced in [22]. The uncertain phase problem can then be formulated as follows.

Problem 2.1 *Let $\mathcal{G}$ be an uncertain system. For a given frequency ω_0, find the smallest α such that:*

$$\exists\ \Omega \in \mathbb{C}^{n_z \times n_w}, \forall \Gamma \in \mathcal{G}_{\omega_0}, \mathcal{N}(\Omega^*\Gamma) \subset sec(0, \alpha).$$

Remark 2.1 *For SISO LTI systems without uncertainty, the numerical range reduces to one point $\mathcal{N}(\Gamma) = G(j\omega_0)$; in this case $\alpha = 0$ and $\Omega = e^{j \arg(G(j\omega_0))}$.*

In the general case, one can define an offset characterized by $C \in \mathbb{C}^{n_z \times n_w}$ and seek the smallest sector with the corresponding notation $sec(C, \alpha)$. This problem can be solved by finding the cone sector containing all the numerical ranges of $\Gamma - C$. Hence, one can search

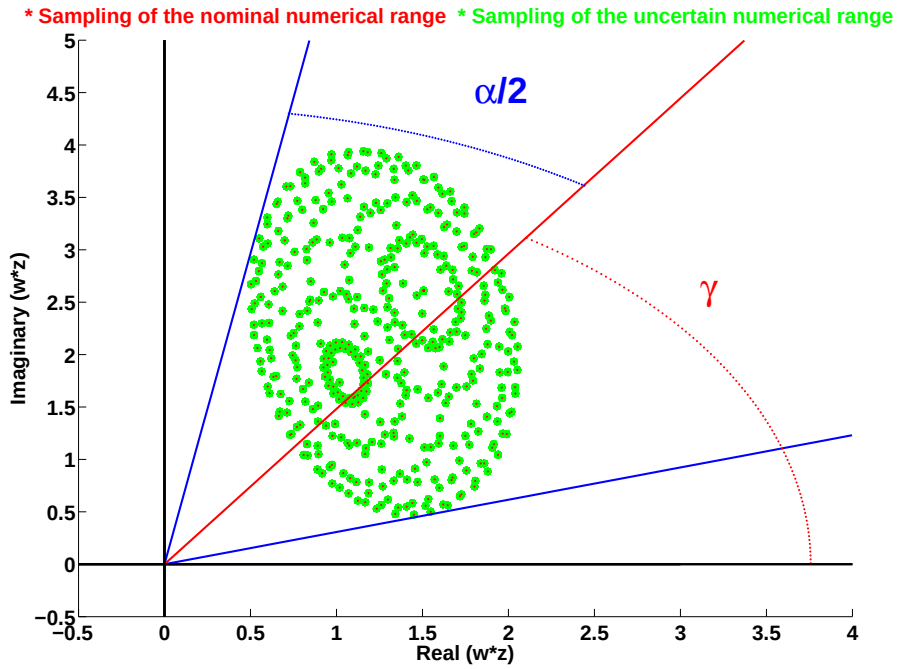

Figure 2: Cone sector containing, at a frequency ω_0, $\mathcal{N}(G(j\omega_0)$ for any $G \in \mathcal{G}$

for the smallest α such that the numerical range $\mathcal{N}(\Omega^*(\Gamma - C))$ will be on the right half plane and centred at the origin.

Problem 2.2 *Let $\mathcal{G}$ be an uncertain system. For a given frequency ω_0 and a given offset C, find the smallest α such that:*

$$\exists\ \Omega \in \mathbb{C}^{n_z \times n_w}, \forall \Gamma \in \mathcal{G}_{\omega_0}, \mathcal{N}(\Omega^*(\Gamma - C)) \subset sec(0, \alpha).$$

3 Preliminary and Definitions

3.1 Uncertain systems

The uncertain system of Fig. 1 can be described as an interconnection $G = \Delta \star\ M$ with $\Delta \in \underline{\mathbf{\Delta}}$. Introducing the internal signals and using the Fourier transform, we obtain the

following system description:

$$\begin{aligned} p(j\omega) &= \Delta(j\omega)\ \ q(j\omega) \\ \begin{pmatrix} q(j\omega) \\ z(j\omega) \end{pmatrix} &= \underbrace{\begin{pmatrix} M_{11}(j\omega) & M_{12}(j\omega) \\ M_{21}(j\omega) & M_{22}(j\omega) \end{pmatrix}}_{M(j\omega)} \begin{pmatrix} p(j\omega) \\ w(j\omega) \end{pmatrix} \end{aligned} \tag{2}$$

where $w(j\omega)$ and $z(j\omega)$ are respectively the Fourier transform of the input and the output signals $w(t)$, of size n_w, and $z(t)$ of size n_z.

The signal $p(t)$ and $q(t)$ are internal signals, of size n_p and n_q respectively, with their corresponding Fourier Transform $p(j\omega)$ and $q(j\omega)$. The external input/output signals w and z in (2) are used to define and evaluate system performance (as it will be explained later). However, if the aim is only to investigate the system stability these external signals could be suppressed and the system description becomes a feedback connection between M_{11} and Δ as follows:

$$\begin{aligned} p(j\omega) &= \Delta(j\omega) \quad q(j\omega) \\ q(j\omega) &= M_{11}(j\omega)\ \ p(j\omega) \end{aligned} \tag{3}$$

3.2 Dissipativity properties

Definition 3.1 *The stable system G is said to be $\{X(j\omega), Y(j\omega), Z(j\omega)\}$ dissipative for every $\omega \in [0, +\infty]$, with $X(j\omega) = X^*(j\omega) \in \mathbb{C}^{n_z \times n_z}$, $Y(j\omega) \in \mathbb{C}^{n_z \times n_w}$ and $Z(j\omega) = Z^*(j\omega) \in \mathbb{C}^{n_w \times n_w}$ if for every $z(j\omega)$ and $w(j\omega)$ such that $z(j\omega) = G(j\omega)w(j\omega)$:*

$$\begin{pmatrix} z(j\omega) \\ w(j\omega) \end{pmatrix}^* \begin{pmatrix} X(j\omega) & Y(j\omega) \\ Y(j\omega)^* & Z(j\omega) \end{pmatrix} \begin{pmatrix} z(j\omega) \\ w(j\omega) \end{pmatrix} < 0 \qquad \forall \omega \in [0, +\infty] \tag{4}$$

Remark 3.1 *Dissipativity properties define a set of relations describing the input-output behaviour of a system G. They represent a set of Quadratic Constraints (QC) involving the input-output signals in the case of LTI systems. In a more general framework, for non linear systems, they can be generalized to a set of Integral Quadratic Constraints (IQC) [7]. Note that in the case of LTI systems, IQC are simplified to QC.*

Without lost of generality, the frequency dependence will be dropped in the sequel. A frequency gridding is defined and the different operations and ideas will be introduced for a

given frequency ω_0 *i.e.* the $\{X(j\omega_0), Y(j\omega_0), Z(j\omega_0)\}$ *dissipativity* will be written as:

$$\begin{pmatrix} z \\ w \end{pmatrix}^* \begin{pmatrix} X & Y \\ Y^* & Z \end{pmatrix} \begin{pmatrix} z \\ w \end{pmatrix} < 0 \tag{5}$$

3.3 Robust stability

In the case where only the stability of uncertain systems is considered as in (3), robust stability can be defined.

Definition 3.2 *An uncertain system $\underline{\mathbf{\Delta}} \star M_{11}$ is said to be robustly stable if for any $\Delta \in \underline{\mathbf{\Delta}}$, the system $\Delta \star M_{11}$ is stable.*

Theorem 3.1 of robust stability is presented. It is the same as *Theorem 4.1* in [24] after adapting it to our notations with a slight difference.

Theorem 3.1 (*Theorem 4.1* **in [24]**) *The feedback connection $M_{11} - \Delta$ is robustly stable if and only if there exists a hermitian matrix $\Phi = \Phi^*$ with Φ from $j\mathbf{R}$ into $\mathbf{C}^{(n_p+n_q)\times(n_p+n_q)}$ such that for all $\Delta \in \underline{\mathbf{\Delta}}$*

1.

$$\begin{pmatrix} \Delta \\ I \end{pmatrix}^* \begin{pmatrix} \Phi_{11} & \Phi_{12} \\ \Phi_{12}^* & \Phi_{22} \end{pmatrix} \begin{pmatrix} \Delta \\ I \end{pmatrix} > 0$$

and

2.

$$\begin{pmatrix} I \\ M_{11} \end{pmatrix}^* \begin{pmatrix} \Phi_{11} & \Phi_{12} \\ \Phi_{12}^* & \Phi_{22} \end{pmatrix} \begin{pmatrix} I \\ M_{11} \end{pmatrix} < 0$$

Remark 3.2 *In Theorem 3.1, stability is characterized with dissipativity properties for all $\Delta \in \underline{\mathbf{\Delta}}$. It is a well known result in graph separation argument which states that if there is a function Φ defining two complementary dissipative properties of two interconnected operators than the overall stability can be proved. Theorem 3.1 is a counterpart of Theorem 1 in [7] for LTI case. The only difference is that the uncertainty set considered here is not restricted to "star-sets", but could be any bounded and connected set $\underline{\mathbf{\Delta}}$.*

3.4 Robust performance

Definition 3.3 *An uncertain system* $\underline{\mathbf{\Delta}} \star M$ *is said to be* $\{X, Y, Z\}$ *dissipative if for any* $\Delta \in \underline{\mathbf{\Delta}}$*, the system* $\Delta \star M$ *is* $\{X, Y, Z\}$ *dissipative.*

The following theorem gives necessary and sufficient conditions to have robust analysis.

Theorem 3.2 *The uncertain system* $\Delta \star M$ *is stable and* $\{X, Y, Z\}$ *dissipative for every* $\Delta \in \underline{\mathbf{\Delta}}$ *if and only if there exists a hermitian matrix* $\Phi = \Phi^*$ *such that:*

1.

$$\begin{pmatrix} \Delta \\ I \end{pmatrix}^* \begin{pmatrix} \Phi_{11} & \Phi_{12} \\ \Phi_{12}^* & \Phi_{22} \end{pmatrix} \begin{pmatrix} \Delta \\ I \end{pmatrix} > 0 \qquad \forall \Delta \in \underline{\mathbf{\Delta}}$$

and

2.

$$\begin{pmatrix} M \\ I \end{pmatrix}^* \begin{pmatrix} \Phi_{22} & 0 & \Phi_{12}^* & 0 \\ 0 & X & 0 & Y \\ \Phi_{12} & 0 & \Phi_{11} & 0 \\ 0 & Y^* & 0 & Z \end{pmatrix} \begin{pmatrix} M \\ I \end{pmatrix} < 0$$

Proof See appendix □

Remark 3.3 *If conditions 1) and 2) of Theorem 3.2 are satisfied for all* ω *and since* $\underline{\mathbf{\Delta}}$ *is a connected set that contains 0 then the stability is guaranteed, see Theorem 4.1 of [24]. Furthermore, when* $\underline{\mathbf{\Delta}}$ *is not a ball of center 0, conditions 1) and 2) still imply the results of Theorem 3.2 if* $\underline{\mathbf{\Delta}}$ *is a connected set with* Δ_0 *such that* $\Delta_0 \star M$ *is stable.*

Remark 3.4 *Theorem 3.2 presents necessary and sufficient conditions for the uncertain system* $\Delta \star M$ *to be* $\{X, Y, Z\}$ *dissipative. Testing these conditions can be expressed as the optimization problem of finding* Φ *such that conditions 1) and 2) are satisfied. However, condition 1) makes the optimization problem infinite dimensional since it has to be tested for all* $\Delta \in \underline{\mathbf{\Delta}}$*, which is difficult from a computational point of view. The complexity can be reduced by introducing an affine set* $\mathbf{\Phi_\Delta}$ *such that for any* $\Phi \in \mathbf{\Phi_\Delta}$*, condition 1) is satisfied. The set* $\mathbf{\Phi_\Delta}$ *depends on the nature of* $\underline{\mathbf{\Delta}}$*. In this case, Theorem 3.2 gives only sufficient conditions for all* $\Delta \in \underline{\mathbf{\Delta}}$ *and the conditions of Theorem 3.2 define a finite dimensional LMI optimization problem that consists in finding one* $\Phi \in \mathbf{\Phi_\Delta}$ *such that the second condition of Theorem 3.2 is satisfied. From a computational point of view, this problem can be efficiently*

solved. The consequence of this parametrization of Φ is a possible conservatism in the obtained results. However, this last can be reduced by an appropriate choice of $\mathbf{\Phi_\Delta}$ depending on the class of the uncertainties $\underline{\mathbf{\Delta}}$.

4 Proposed approach

Finding a cone sector $sec(0,\alpha)$ of Problem 2.1 (that contains $\mathcal{N}(\Gamma), \forall \Gamma \in \mathcal{G}_{j\omega_0}$) can be formulated as find b such that:

$$\begin{gathered} Re(w^*\Omega^* z) - \beta Im(w^*\Omega^* z) > 0 \qquad \beta = \pm b \\ \forall\ z, w \quad \text{such that } \exists\ \Delta \in \underline{\mathbf{\Delta}} \text{ and } \quad z = (\Delta \star M)\, w \end{gathered} \tag{6}$$

$b > 0$ defines a slope of two lines forming the cone sector and is related to α by $\tan\left(\frac{\alpha}{2}\right) = \frac{1}{b}$. Please note that the matrix Ω is used to rotate all numerical ranges in the right half plane such that $\gamma = 0$, see Fig. 3. Inequalities (6) represent a couple of Quadratic

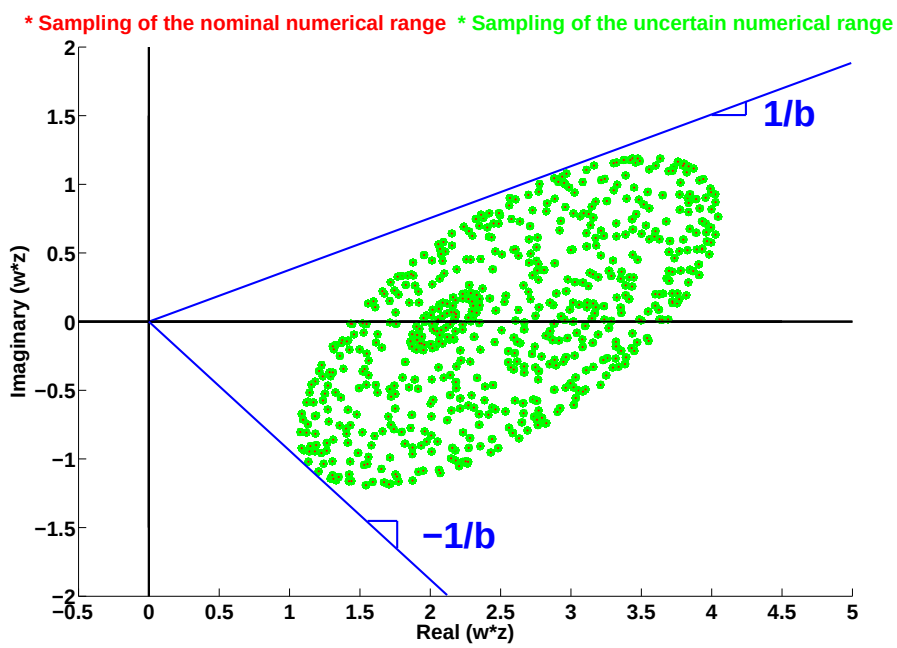

Figure 3: Illustration of $\mathcal{N}(\Gamma)$ and the cone sector $sec(0,\alpha)$

Constraints (QC) characterizing the input output behaviour of the system G with its input and output signals w and z. The cone sector can hence be formulated as:

$$\begin{pmatrix} z \\ w \end{pmatrix}^* \begin{pmatrix} 0 & \Omega(-I + j\beta I) \\ (\Omega(-I + j\beta I))^* & 0 \end{pmatrix} \begin{pmatrix} z \\ w \end{pmatrix} < 0 \tag{7}$$

For any other given $C \neq 0$ *i.e.* as defined in Problem 2.2, the cone sector $sec(C, \alpha)$ is given by:

$$\begin{pmatrix} z \\ w \end{pmatrix}^* \begin{pmatrix} X & Y \\ Y^* & Z \end{pmatrix} \begin{pmatrix} z \\ w \end{pmatrix} < 0$$

Where: (8)

$$X = 0,\ Y = \Omega(-I + j\beta I),\ Z = -(Y^*C + C^*Y)$$

With $\beta = \pm b$, the inequalities of (8) define two dissipativity properties $\{X_1, Y_1, Z_1\}$ for $\beta = +b$ and $\{X_2, Y_2, Z_2\}$ for $\beta = -b$.

5 Main results

Theorem 5.1 *For a given C, given α and for the uncertain system $\Delta \star M$. If there exist: Ω, $(\Phi_{111}, \Phi_{121}, \Phi_{221}) \in \mathbf{\Phi_\Delta}$ and $(\Phi_{112}, \Phi_{122}, \Phi_{222}) \in \mathbf{\Phi_\Delta}$ such that:*

$$\begin{pmatrix} M \\ I \end{pmatrix}^* \begin{pmatrix} \Phi_{22i} & 0 & \Phi_{12i}^* & 0 \\ 0 & X_i & 0 & Y_i \\ \Phi_{12i} & 0 & \Phi_{11i} & 0 \\ 0 & Y_i^* & 0 & Z_i \end{pmatrix} \begin{pmatrix} M \\ I \end{pmatrix} < 0 \qquad i = 1, 2$$

Where:

$$\begin{aligned} &X_1 = 0,\ X_2 = 0 \\ &Y_1 = \Omega(-I + j\ \cot\left(\frac{\alpha}{2}\right) I), \quad Z_1 = -(Y_1^*C + C^*Y_1) \\ &Y_2 = \Omega(-I - j\ \cot\left(\frac{\alpha}{2}\right) I), \quad Z_2 = -(Y_2^*C + C^*Y_2) \end{aligned}$$

Then, the cone sector $sec(0, \alpha)$ contains all the numerical ranges of the uncertain system $\Delta \star M - C$ scaled by Ω:

$$\mathcal{N}(\Omega^*(\Delta \star M - C)) \subset sec(0, \alpha) \qquad \forall \Delta \in \underline{\mathbf{\Delta}}$$

Proof Theorem 5.1 is a direct application of Theorem 3.2, with $\{X, Y, Z\}$ *dissipativity* as shown in (8) for $b = \cot\left(\frac{\alpha}{2}\right)$ and by choosing some particular structure defined by $\mathbf{\Phi_\Delta}$, see Remark 3.4. □

Theorem 5.1 defines an optimization problem. The decision variables are: Ω, Φ_{111}, Φ_{121}, Φ_{221}, Φ_{112}, Φ_{122}, and Φ_{222}. It proposes only sufficient conditions for the existence of a cone

sector $sec(0,\alpha)$ containing all the numerical ranges. Testing them is a finite dimensional feasibility problem involving LMI which can be efficiently solved [26].

If a cone sector exists, it is possible to search for the smallest one. To this purpose, we introduce a size measure for the cone sector. The objective is to minimize α. Since $\tan(\frac{\alpha}{2}) = \frac{1}{b}$ and $b > 0$:

$$\begin{array}{ccccc} \min\limits_{\alpha} & \alpha & \Leftrightarrow & \min\limits_{\alpha} & \tan(\alpha/2) \\ & & \Leftrightarrow & \min\limits_{b} & 1/b \end{array}$$

Then, $1/b$ represents a size measure for the cone. Since the conditions of Theorem 5.1 are only sufficient, minimizing $1/b$ such that they are satisfied implies the minimization of an upper bound $\widetilde{\alpha}$ on the spread angle α. Nevertheless, how this upper bound is close to real spread depends on the choice of $\mathbf{\Phi_\Delta}$, see Remark 3.4.

After defining the size measure of the cone sector $sec(C,\alpha)$, Problem 2.2 can be addressed such that an upper bound on the angle α can be computed efficiently.

Theorem 5.2 *An upper bound on the angle α defined in Problem 2.2 can be obtained by finding Ω, $\widehat{D}_1$, $\widehat{G}_1$, $\widetilde{D}_1$, $\widetilde{G}_1$, $\widehat{D}_2$, $\widehat{G}_2$, $\widetilde{D}_2$, and $\widetilde{G}_2$ that minimize λ in the following Generalized Eigenvalues Problem (GEVP):*

$$\min_{\substack{\lambda,\,\Omega \\ \widehat{D}_1,\widehat{G}_1,\widetilde{D}_1,\widetilde{G}_1 \\ \widehat{D}_2,\widehat{G}_2,\widetilde{D}_2,\widetilde{G}_2}} \qquad \lambda$$

1.

$$\lambda \begin{pmatrix} \widehat{D}_1 & 0 \\ 0 & \widehat{D}_2 \end{pmatrix} + \begin{pmatrix} \widetilde{D}_1 & 0 \\ 0 & -\widetilde{D}_2 \end{pmatrix} > 0$$

$$\lambda \begin{pmatrix} M & 0 \\ I & 0 \\ 0 & M \\ 0 & I \end{pmatrix}^* \begin{pmatrix} B_1 & 0 \\ 0 & B_2 \end{pmatrix} \begin{pmatrix} M & 0 \\ I & 0 \\ 0 & M \\ 0 & I \end{pmatrix} + \cdots$$

$$\cdots + \begin{pmatrix} M & 0 \\ I & 0 \\ 0 & M \\ 0 & I \end{pmatrix}^* \begin{pmatrix} A_1 & 0 \\ 0 & A_2 \end{pmatrix} \begin{pmatrix} M & 0 \\ I & 0 \\ 0 & M \\ 0 & I \end{pmatrix} > 0$$

2.

$$\begin{pmatrix} \widehat{D}_1 & 0 \\ 0 & \widehat{D}_2 \end{pmatrix} > 0$$

$$\begin{pmatrix} M & 0 \\ I & 0 \\ 0 & M \\ 0 & I \end{pmatrix}^* \begin{pmatrix} B_1 & 0 \\ 0 & B_2 \end{pmatrix} \begin{pmatrix} M & 0 \\ I & 0 \\ 0 & M \\ 0 & I \end{pmatrix} > 0$$

with $i = \{1, 2\}$, B_i and A_i are given by:

$$B_i = \begin{pmatrix} -\widehat{D}_i & 0 & -\widehat{G}_i^* & 0 \\ 0 & 0 & 0 & \Omega \\ -\widehat{G}_i & 0 & \widehat{D}_i & 0 \\ 0 & \Omega^* & 0 & -(\Omega^* C + C^* \Omega) \end{pmatrix}$$

$$A_i = (-1)^{i-1} \begin{pmatrix} -\widetilde{D}_i & 0 & -\widetilde{G}_i^* & 0 \\ 0 & 0 & 0 & -j\Omega \\ -\widetilde{G}_i & 0 & \widetilde{D}_i & 0 \\ 0 & (-j\Omega)^* & 0 & -j(\Omega^* C - C^* \Omega) \end{pmatrix}$$

with: $\widehat{D}_i > 0$ and $\widetilde{D}_i > 0$ are hermitian matrices while $\widehat{G}_i$ and $\widetilde{G}_i$ are skew hermitian.

Proof For the cone sector defined by the dissipativity inequality (8) and using Theorem 5.1, Problem 2.2 can be solved with finding a minimum upper bound $\widetilde{\alpha}$ on α such that $sec(C, \alpha) \subset sec(C, \widetilde{\alpha})$. Hence, Problem 2.2 becomes:

Find $\Phi_i = \{\Phi_{11i}, \Phi_{12i}, \Phi_{22i}\} \in \mathbf{\Phi_\Delta}$, X_i, Y_i, and Z_i, $i = \{1, 2\}$, that maximize b such that:

$$\begin{pmatrix} M \\ I \end{pmatrix}^* \begin{pmatrix} -\Phi_{22i} & 0 & -\Phi_{12i}^* & 0 \\ 0 & -X_i & 0 & -Y_i \\ -\Phi_{12i} & 0 & -\Phi_{11i} & 0 \\ 0 & -Y_i^* & 0 & -Z_i \end{pmatrix} \begin{pmatrix} M \\ I \end{pmatrix} > 0 \quad i = 1, 2 \tag{9}$$

where X_i, Y_i and Z_i defined as in (8) for $\beta = +b$ and $\beta = -b$. Let us define Φ_1 and Φ_2 as:

$$\Phi_1 = \widehat{\Phi}_1 + b\widetilde{\Phi}_1 \qquad \Phi_2 = \widehat{\Phi}_2 - b\widetilde{\Phi}_2 \tag{10}$$

where $\widehat{\Phi}_i$ and $\widetilde{\Phi}_i$ are chosen in the form of DG scaling presented in [5]:

$$\widehat{\Phi}_i = \begin{pmatrix} -\widehat{D}_i & \widehat{G}_i \\ \widehat{G}_i^* & \widehat{D}_i \end{pmatrix} \qquad \widetilde{\Phi}_i = \begin{pmatrix} -\widetilde{D}_i & \widetilde{G}_i \\ \widetilde{G}_i^* & \widetilde{D}_i \end{pmatrix}$$

In order to make sure that $\Phi_i \in \mathbf{\Phi_\Delta}$, one needs to guarantee that:

$$\widehat{D}_1 + b\widetilde{D}_1 > 0 \quad \widehat{D}_2 - b\widetilde{D}_2 > 0 \tag{11}$$

Then, inequalities (9) become:

$$\begin{pmatrix} M \\ I \end{pmatrix}^* \left[\begin{pmatrix} -\widehat{D}_i & 0 & -\widehat{G}_i^* & 0 \\ 0 & 0 & 0 & \Omega \\ -\widehat{G}_i & 0 & \widehat{D}_i & 0 \\ 0 & \Omega^* & 0 & -(\Omega^* C + C^* \Omega) \end{pmatrix} + \dots \right.$$
$$\left. \dots + (-1)^{i-1} b \begin{pmatrix} -\widetilde{D}_i & 0 & -\widetilde{G}_i^* & 0 \\ 0 & 0 & 0 & -j\Omega \\ -\widetilde{G}_i & 0 & \widetilde{D}_i & 0 \\ 0 & (-j\Omega)^* & 0 & -j(\Omega^* C - C^* \Omega) \end{pmatrix} \right] \begin{pmatrix} M \\ I \end{pmatrix} > 0 \tag{12}$$

Evaluating for $i = \{1, 2\}$ and since $b > 0$, inequalities (11) and (12) become:

$$\frac{1}{b}\widehat{D}_1 + \widetilde{D}_1 > 0$$
$$\frac{1}{b}\widehat{D}_2 - \widetilde{D}_2 > 0$$
$$\frac{1}{b}\begin{pmatrix} M \\ I \end{pmatrix}^* B_1 \begin{pmatrix} M \\ I \end{pmatrix} + \begin{pmatrix} M \\ I \end{pmatrix}^* A_1 \begin{pmatrix} M \\ I \end{pmatrix} > 0$$
$$\frac{1}{b}\begin{pmatrix} M \\ I \end{pmatrix}^* B_2 \begin{pmatrix} M \\ I \end{pmatrix} + \begin{pmatrix} M \\ I \end{pmatrix}^* A_2 \begin{pmatrix} M \\ I \end{pmatrix} > 0$$

The last inequalities can be combined together as it is shown in the first condition of Theorem 5.2. Hence, minimizing $1/b$ such that the last inequalities holds is a Generalized Eigenvalues Problem since condition 2) of Theorem 5.2 holds. □

Remark 5.1 *Theorem 5.2 is a Generalized Eigenvalues Problem, it has been proved that it is a quasiconvex optimization problem [26]. It can be solved efficiently using the projective method described in [27]. Nevertheless, since the conditions are sufficient, Theorem 5.2 allows to compute a sector $sec(C, \widetilde{\alpha})$ which contains the smallest cone sector $sec(C, \alpha)$. The conservatism can be reduced by an appropriate choice of Φ_Δ depending on the nature of uncertainties: D scaling [6], DG scaling [5] or DGL scaling [28]. Here the DG scaling is chosen to characterize Φ_i for illustration purposes. Nevertheless, one can choose other types of scaling depending on the nature of uncertainties. In this case, the structure of parametrization matrices Φ_i will be different but the idea remains the same i.e. decomposing Φ_i into two parts: $\widehat{\Phi}_i$ and $\widetilde{\Phi}_i$.*

Remark 5.2 *With respect to Theorem 5.1, Theorem 5.2 introduces an extra condition (condition 2) in order to obtain a Generalized Eigenvalues problem due to the advantage of this*

optimization problem. This condition has two nice justifications: first, it guarantees that the interconnection $\Delta \star M, \forall \Delta \in \underline{\mathbf{\Delta}}$ *is stable. Second, it guarantees that* $\mathcal{N}(\Omega^*(\Gamma - C))$ *is located in the right half plane. Then, one needs to minimize the upper bound* $\widetilde{\alpha}$*:*

$$\widetilde{\alpha} \in \left[-\frac{\pi}{2}, +\frac{\pi}{2}\right] \quad s.t \;\; \mathcal{N}(\Omega^*(\Gamma - C)) \subset sec(0, \widetilde{\alpha})$$

On the other side, introducing this condition enforces more constraints on $\Phi_1 \in \mathbf{\Phi_\Delta}$ *and* $\Phi_2 \in \mathbf{\Phi_\Delta}$ *if they are chosen as in (10) with* $\widetilde{\Phi}_i = 0$*: they must satisfy that all the numerical ranges* $\mathcal{N}(\Omega^*(\Gamma - C))$ *are in the right half plane and respect their dissipative properties at the same time. Hence, an extra conservatism may appear (besides that of Remark 5.1). To overcome this issue,* Φ_1 *and* Φ_2 *are chosen of the form (10). Here,* $\widehat{D}_i$ *and* $\widehat{G}_i$ *ensure that the interconnection* $\Delta \star M$ *is stable and* $\mathcal{N}(\Omega^*(\Gamma - C))$ *is in the right half plane. While* $\widetilde{D}_i$ *and* $\widetilde{G}_i$ *introduce an additional degree of freedom to ensure that* $\mathcal{N}(\Omega^*(\Gamma - C)) \subset sec(0, \widetilde{\alpha})$*. Hence, with this choice, the conservatism is reduced.*

6 Illustration Examples

In this section, we will show some examples that illustrate our results graphically.

6.1 SISO Uncertain Systems

The following example is inspired from [1]. Let us consider the following SISO example with structured scalar uncertainties:

$$G^{SISO}(j\omega_0) = \frac{-\omega_0^2 + 2\xi_n\omega_n(j\omega_0) + \omega_n^2}{-\omega_0^2 + 2\xi_d\omega_d(j\omega_0) + \omega_d^2}$$

with $\omega_0 = 1\ rad/s$, $\xi_n = 0.7$ and $\xi_d = 0.01$. The uncertainties are parametric and they are defined by: $\omega_n \in [0.1, 0.5]$ and $\omega_d \in [9, 10]$. The results are illustrated in Fig.4.

The sampling of the uncertain response presented in green dots is obtained for a gridding of ω_n and ω_d equal to 0.01 and 0.001 respectively. The nominal response is equal to $21 + 45i$ and it is presented with a red dot. The cone offset C was fixed arbitrary at $C = 60 + 80i$. The obtained results shows very low conservatism and define a cone angle $\tilde{\alpha} = 49.52°$.

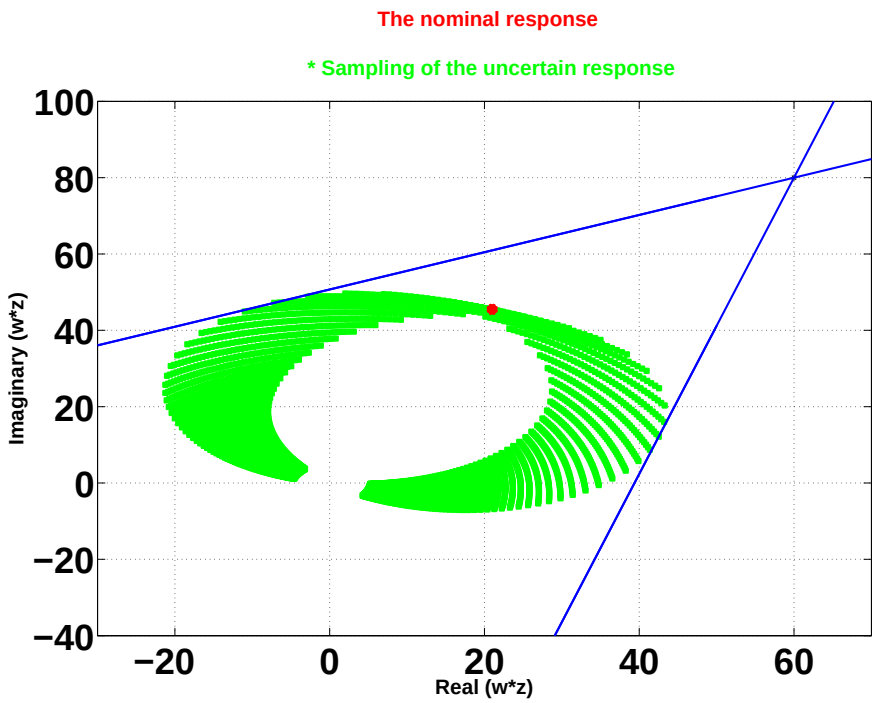

Figure 4: Visualisation of cone sector for SISO example

6.2 MIMO Uncertain Systems

For MIMO case, a simple example can be given by:

$$G^{MIMO}(j\omega_0) = o_{dir} \times G^{SISO}(j\omega_0) \times i_{dir} - C$$

with same frequency $\omega_0 = 1 \quad rad/s$, $o_{dir} = [1 \quad -1.5]^T$, $i_{dir} = [1 \quad 2]$ and $C = 50(1+5i)I_2$. Fig. 5 shows a sampling of the union of numerical ranges while Fig. 6. shows a sampling of the union of numerical ranges scaled by Ω^* with the obtained cone sector.

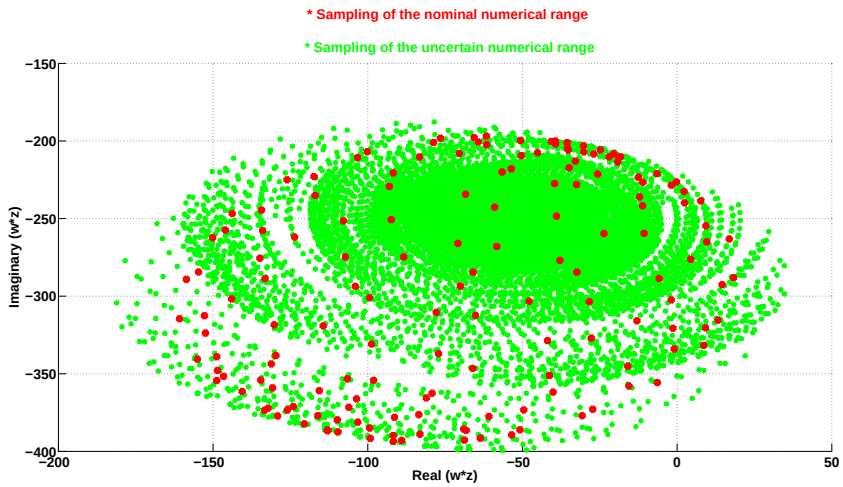

Figure 5: Visualisation of the nominal and the uncertain numerical ranges

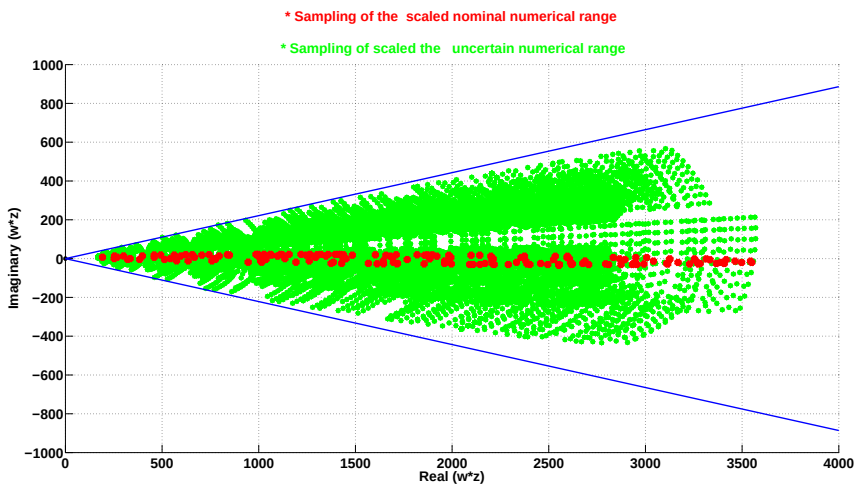

Figure 6: Visualisation of the scaled nominal and the uncertain numerical ranges

As it can be seen in Fig 5 and Fig 6, the numerical range $\Gamma(\mathcal{N} - C)$ which was located in the left half plane was rotated and scaled in size by Ω^*. Once it is in the right half plane, a cone sector $sec(0, \tilde{\alpha})$ is found: $\tilde{\alpha} = 25°$. See Fig. 6 for illustration purposes, please note that in the imaginary and the real axes scales are not equal.

7 Large Scale System Hierarchical Analysis

An interesting application of the previous result is the problem of the performance analysis of linear large scale uncertain systems. A large scale uncertain system is a system composed of N uncertain sub-systems which are interconnected according to a given topology. It can be represented by a feedback of the sub-systems G_i regrouped into a block diagonal operator G_g and an interconnection operator M_{int}, see Fig.7 and (13).

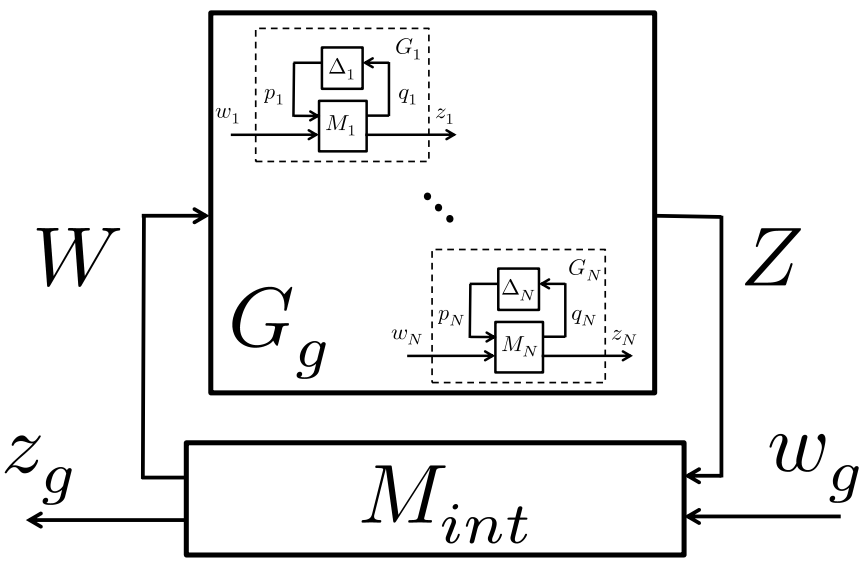

Figure 7: Global uncertain large scale system

$$\begin{bmatrix} W \\ z_g \end{bmatrix} = M_{int} \begin{bmatrix} Z \\ w_g \end{bmatrix} \quad \text{and} \quad Z = \overbrace{\mathbf{bdiag}_i\left(G_i\right)}^{G_g} W \tag{13}$$

where $W = [w_i, \ldots, w_N]^T$, $Z = [z_i, \ldots, z_N]^T$. z_g and z_g are the global input/output performance signals.

Each sub-system G_i is an interconnection of the nominal sub-system part M_i and the uncertainty Δ_i belonging to the uncertainty set $\underline{\mathbf{\Delta}}_i$ which definition is similar to the set $\underline{\mathbf{\Delta}}$:

$$\begin{bmatrix} q_i \\ z_i \end{bmatrix} = M_i \begin{bmatrix} p_i \\ w_i \end{bmatrix} \quad \text{and} \quad p_i = \Delta_i \, q_i \tag{14}$$

with the dimensions of the vectors q_i, p_i, w_i and z_i equal to n_q^i, n_p^i, n_z^i and n_w^i.

The following formulation of the performance analysis problem is proposed.

Problem 7.1 *For a given large-scale system defined by (13) and (14), a given frequency gridding vector $v_\omega = \{\omega_k\}$ and given the uncertainty set $\underline{\mathbf{\Delta}}_i$ for all $i \in \{1, \ldots, N\}$ find a frequency depending upper bound $\{\gamma(\omega_k)\}$ on the (H_∞) performance transfer function between global external input w_g and output z_g signals.*

As discussed in the introduction, the hierarchical approach is composed of two steps:

1. for each uncertain sub-system G_i, find one or several dissipativity property Φ_{P_i} that describes its input-output behaviour;

$$\begin{pmatrix} z_i \\ w_i \end{pmatrix}^* \begin{pmatrix} X_i^k & Y_i^k \\ \left(Y_i^k\right)^* & Z_i^k \end{pmatrix} \begin{pmatrix} z_i \\ w_i \end{pmatrix} < 0$$

   where $k = 1, \ldots, p$ where p is the number of the obtained dissipativity properties.

2. In the global step, the input/output signals W and Z of the uncertain bloc G_g are characterized with:

$$\begin{pmatrix} z_1 \\ \vdots \\ z_N \\ w_1 \\ \vdots \\ w_N \end{pmatrix}^* \underbrace{\left(\begin{array}{ccc|ccc} \sum_{k=1}^{p} \tau_{1k} X_1^k & \ldots & 0 & \sum_{k=1}^{p} \tau_{1k} Y_1^k & \ldots & 0 \\ \vdots & \ddots & \vdots & \vdots & \ddots & \vdots \\ 0 & \ldots & \sum_{k=1}^{p} \tau_{Nk} X_N^k & 0 & \ldots & \sum_{k=1}^{p} \tau_{Nk} Y_N^k \\ \hline \sum_{k=1}^{p} \tau_{1k} \left(Y_1^k\right)^* & \ldots & 0 & \sum_{k=1}^{p} \tau_{1k} Z_1^k & \ldots & 0 \\ \vdots & \ddots & \vdots & \vdots & \ddots & \vdots \\ 0 & \ldots & \sum_{k=1}^{p} \tau_{Nk} \left(Y_N^k\right)^* & 0 & \ldots & \sum_{k=1}^{p} \tau_{Nk} Z_N^k \end{array}\right)}_{\Phi^{P_g}} \begin{pmatrix} z_1 \\ \vdots \\ z_N \\ w_1 \\ \vdots \\ w_N \end{pmatrix} < 0$$

   where τ_{ik} are positive scalars. The uncertain large scale system performance is measured by its frequency response magnitude. For a given frequency ω_0, The performance dissipativity property is thus chosen of the form

$$\begin{pmatrix} X & Y \\ Y^* & Z \end{pmatrix} = \begin{pmatrix} I & 0 \\ 0 & -\gamma^2(\omega_0) I \end{pmatrix} \tag{15}$$

   Hence, Problem 7.1 can be solved using Theorem 3.2 where the uncertainty block Δ is the block G_g which characterised by Φ^{P_g} *i.e.* Φ of Theorem 3.2 is equal to $-\Phi^{P_g}$.

Let us consider the example of the performance analysis of the active clock distribution network of [2]. It is composed of $N = 16$ mutually synchronized Phase Locked Loop (PLL) delivering the clock signals to the chip. In order to synchronize all the network, the PLLs exchange information through an interconnection structure. This example is suitable for illustration of the proposed hierarchical analysis approach as the performance is naturally evaluated in the frequency domain [16].

PLL network description

In this application, all the PLLs are homogeneous *i.e.* have the same description and uncertainty set $\underline{\mathbf{\Delta}}$. Due to the manufacturing process, technological dispersions are inevitable. They can be presented as parametric uncertainties belonging to the same set $\underline{\mathbf{\Delta}}$. Then, the description of the N PLLs is:

$$G_i(j\omega_0) = \frac{k_i(j\omega_0 + a_i)}{-\omega_0^2 + k_i j\omega_0 + k_i a_i} \qquad \forall i \in \{1, \ldots, N\}$$

Where $k_i \in [0.76, 6.84] \times 10^4$, $a_i \in [91.1, 273.3]$ and ω_0 is the current frequency defined by griding. Furthermore, $G_i(j\omega_0)$ can be written as the interconnection of certain and uncertain part:

$$G_i(j\omega_0) = \Delta_i \star M_{PLL} \qquad \Delta_i \in \underline{\mathbf{\Delta}}$$

With Δ_i is given by:

$$\underline{\mathbf{\Delta}} = \left\{ \Delta_i = \begin{pmatrix} \delta_{k_i} & 0 \\ 0 & \delta_{a_i} \end{pmatrix} \quad ||\Delta_i||_\infty \leq 1 \right\}$$

The performance of this network can be characterized by its global input and output w_g and z_g using the global frequency response magnitude bound as in (15), while the exchange of information between PLLs is modelled by an interconnection matrix M_{int}:

$$
M_{int} = \left(\begin{array}{cccccccccccccccc|c}
0 & \frac{1}{3} & 0 & 0 & \frac{1}{3} & 0 & 0 & 0 & 0 & 0 & 0 & 0 & 0 & 0 & 0 & 0 & \frac{1}{3} \\
\frac{1}{3} & 0 & \frac{1}{3} & 0 & 0 & \frac{1}{3} & 0 & 0 & 0 & 0 & 0 & 0 & 0 & 0 & 0 & 0 & 0 \\
0 & \frac{1}{3} & 0 & \frac{1}{3} & 0 & 0 & \frac{1}{3} & 0 & 0 & 0 & 0 & 0 & 0 & 0 & 0 & 0 & 0 \\
0 & 0 & \frac{1}{2} & 0 & 0 & 0 & 0 & \frac{1}{2} & 0 & 0 & 0 & 0 & 0 & 0 & 0 & 0 & 0 \\
\frac{1}{3} & 0 & 0 & 0 & 0 & \frac{1}{3} & 0 & 0 & \frac{1}{3} & 0 & 0 & 0 & 0 & 0 & 0 & 0 & 0 \\
0 & \frac{1}{4} & 0 & 0 & \frac{1}{4} & 0 & \frac{1}{4} & 0 & 0 & \frac{1}{4} & 0 & 0 & 0 & 0 & 0 & 0 & 0 \\
0 & 0 & \frac{1}{4} & 0 & 0 & \frac{1}{4} & 0 & \frac{1}{4} & 0 & 0 & \frac{1}{4} & 0 & 0 & 0 & 0 & 0 & 0 \\
0 & 0 & 0 & \frac{1}{3} & 0 & 0 & \frac{1}{3} & 0 & 0 & 0 & 0 & \frac{1}{3} & 0 & 0 & 0 & 0 & 0 \\
0 & 0 & 0 & 0 & \frac{1}{3} & 0 & 0 & 0 & 0 & \frac{1}{3} & 0 & 0 & \frac{1}{3} & 0 & 0 & 0 & 0 \\
0 & 0 & 0 & 0 & 0 & \frac{1}{4} & 0 & 0 & \frac{1}{4} & 0 & \frac{1}{4} & 0 & 0 & \frac{1}{4} & 0 & 0 & 0 \\
0 & 0 & 0 & 0 & 0 & 0 & \frac{1}{4} & 0 & 0 & \frac{1}{4} & 0 & \frac{1}{4} & 0 & 0 & \frac{1}{4} & 0 & 0 \\
0 & 0 & 0 & 0 & 0 & 0 & 0 & \frac{1}{3} & 0 & 0 & \frac{1}{3} & 0 & 0 & 0 & 0 & \frac{1}{3} & 0 \\
0 & 0 & 0 & 0 & 0 & 0 & 0 & 0 & \frac{1}{2} & 0 & 0 & 0 & 0 & \frac{1}{2} & 0 & 0 & 0 \\
0 & 0 & 0 & 0 & 0 & 0 & 0 & 0 & 0 & \frac{1}{3} & 0 & 0 & \frac{1}{3} & 0 & \frac{1}{3} & 0 & 0 \\
0 & 0 & 0 & 0 & 0 & 0 & 0 & 0 & 0 & 0 & \frac{1}{3} & 0 & 0 & \frac{1}{3} & 0 & \frac{1}{3} & 0 \\
0 & 0 & 0 & 0 & 0 & 0 & 0 & 0 & 0 & 0 & 0 & \frac{1}{2} & 0 & 0 & \frac{1}{2} & 0 & 0 \\
\hline
0 & 0 & 0 & 0 & 0 & 0 & 0 & 0 & 0 & 0 & 0 & 0 & 0 & 0 & 0 & -1 & 1
\end{array}\right)
$$

7.1 Application of the Hierarchical Approach on the PLL network

For the PLL network, the hierarchical approach consists of two steps:

7.1.1 Local step

Characterize the input-output behaviour of each PLL using dissipativity properties. In addition to the cone sector, one can use other quadratic constraints that can be interpreted by simple geometric forms: disc and band, see [1] and [16]) for more details. Since all the PLLs are homogeneous, the dissipativity properties obtained for one PLL are valid for all the 16 PLL.

The disc dissipativity property used in this report is the same as in [1]. Unlike [16], the band dissipativity property is slightly different: the orientation of the band is not fixed.

For the cone sector, the offset is fixed as $C = c_{disc} + ir_{disc}$ where c_{disc} and r_{disc} are the disc centre and radius respectively obtained from the disc dissipativity properties [1]. For illustration purpose, Figure 8 displays the obtained dissipativity properties of a PLL for different frequencies. The sampling of the uncertain responses are presented in green dots while the nominal responses are presented with a red dot. The black circle The black circle (the black star is its center) and the black lines represent the disc dissipativity while the blue lines represent the cone sector.

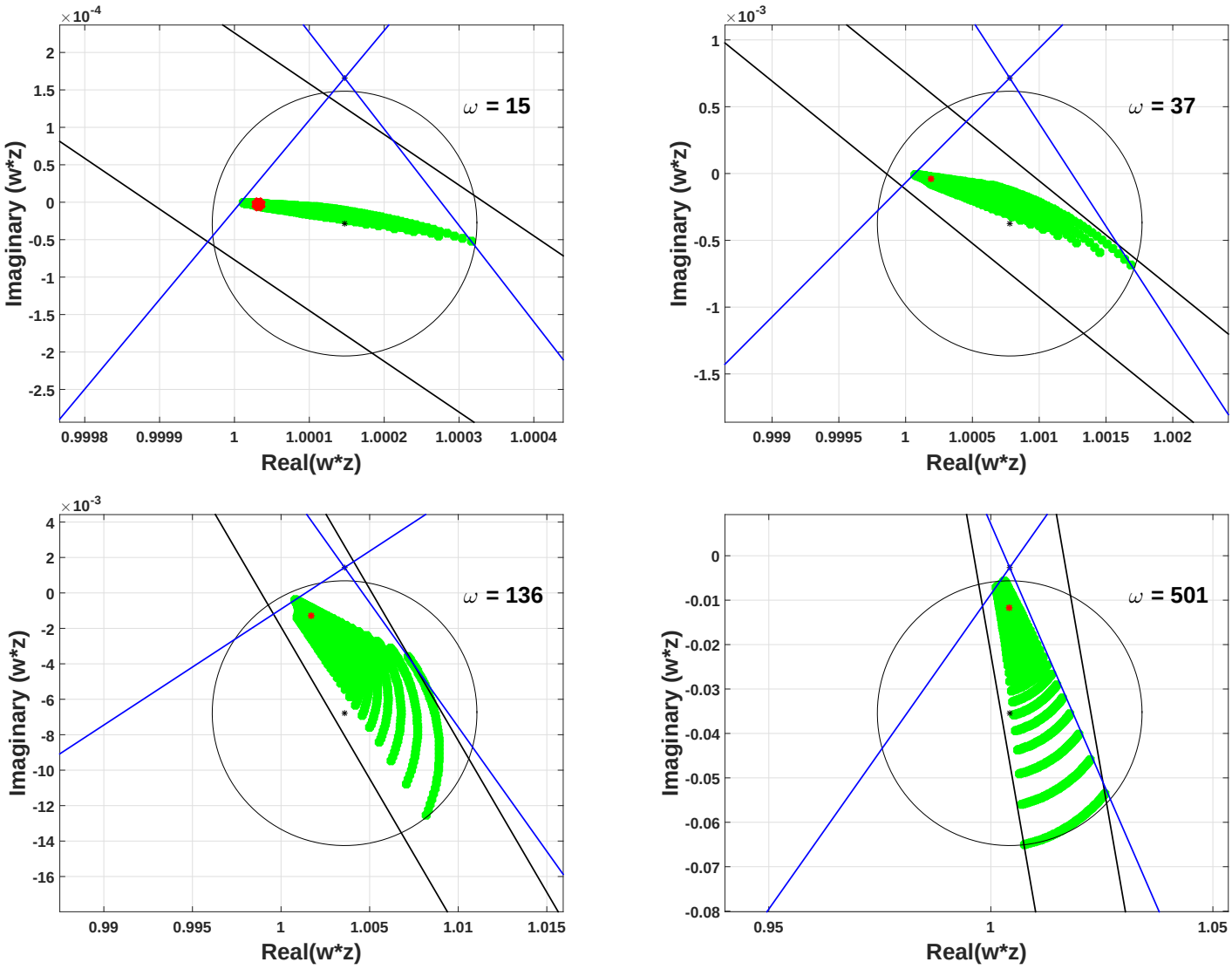

Figure 8: Visualisation of the three dissipativity properties of a PLL

7.1.2 Global step

Evaluate the performance of the network by finding a minimal upper bound on its frequency response magnitude using the dissipativity properties describing the PLLs and obtained in the local step. See [15], [1] and [16] for more details. In this step, one can combine the different dissipativity properties of each PLL: disc, disc+band, disc+cone, *etc.* and propagate this input-output characterization of each sub-system to investigate the performance of the network.

7.2 The PLL network performance analysis

The performance analysis results of the PLL network presented in Fig. 9 and summarized in TABLE 1. The direct μ-analysis approach presents the less conservative results with

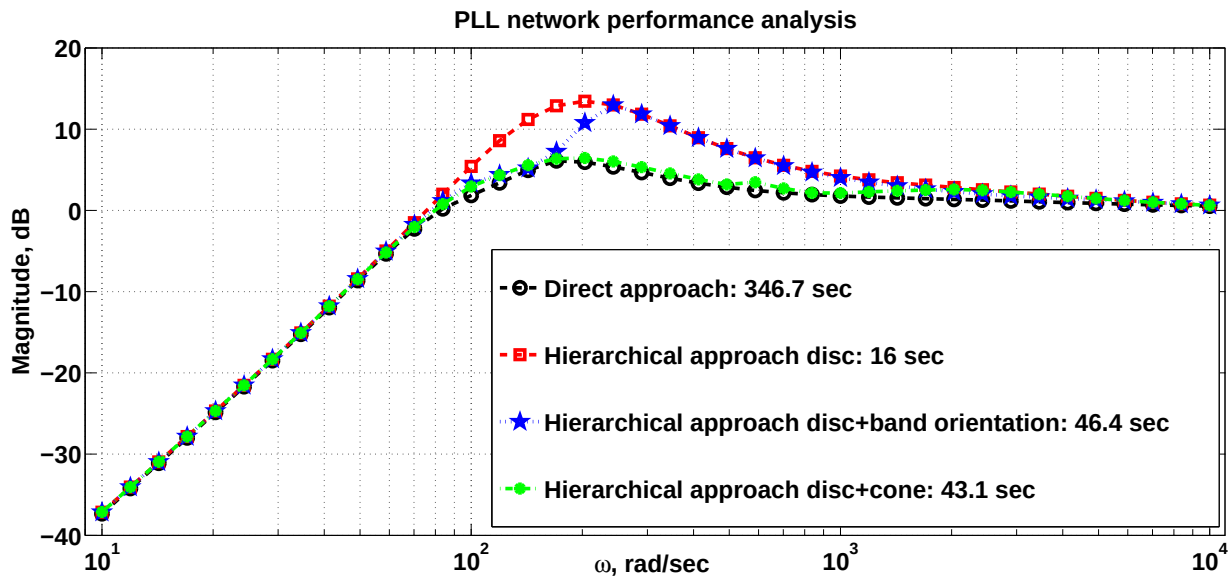

Figure 9: The PLL network performance analysis

a maximum peak of $6.01dB$ comparing to the different hierarchical approaches. However, computation time is significant: 346.7s.

Approach	Maximum peak	Computation time
μ-analysis	$6.01dB$	347.6s
Hierarchical: disc	$13.44dB$	16s
Hierarchical: disc+band	$12.97dB$	46.4s
Hierarchical: disc+cone	$6.45dB$	43.1s

Table 1: Comparison between the different approaches

To overcome the time issue, the authors of [1] and [16] introduced the hierarchical approach for the PLL network performance analysis with two sub-system characterizations: disc and band QC. The results of the disc [1] and of the disc+band [16] characterizations are presented in Fig. 9. It is clear that the performance analysis is much faster but also more conservative. This paper introduces a new QC: cone sector which considers the phase information. The cone sector is used in combination with the disc QC obtained in [1]. It is

clear that this combination is more suitable for the PLL network where the obtained result is almost the same as the result of direct μ-analysis approach but in much less time, see Fig. 9.

In a general way, the conservatism of the hierarchical approach can be reduced by combining multiple dissipativity properties from the local step: disc+bands+cones. However, to obtain precise result it is better to combine the dissipativity properties of different nature. Of course, the computation time will increase with the number of dissipativity properties used, however since they are used in local step, and thus potentially for a system of small dimensions (local sub-system), this increase is limited within a reasonable time. The contribution of this paper, is an introduction of a new QC that take into account the information on uncertain sub-system phase. One can thus better define a trade-off between conservatism and efficiency.

8 Conclusion

In this report, the performance analysis of uncertain large scale systems is considered. In order to reduce the complexity and the computation time, the hierarchical approach is used to investigate the performance of a PLL network. A new IQC is proposed for the local step which is the phase uncertainty characterization. SISO and MIMO examples are used to illustrate the efficiency of this characterization. This new IQC confirms its advantage in obtaining less conservative results in the hierarchical approach comparing with the already existing IQC in literature. For the future work, it would be interesting to investigate the appropriate decomposition of the network into sub-networks in order to have the less conservative results in a reasonable time *i.e.* add an additional indicator defining conservatism/computation time trade-off.

A Appendix

Theorem 3.2 states that $\Delta \star M$ is stable and $\{X, Y, Z\}$ dissipative if and only if:

1. $$\begin{pmatrix} \Delta \\ I \end{pmatrix}^* \begin{pmatrix} \Phi_{11} & \Phi_{12} \\ \Phi_{12}^* & \Phi_{22} \end{pmatrix} \begin{pmatrix} \Delta \\ I \end{pmatrix} > 0 \qquad \forall \Delta \in \underline{\mathbf{\Delta}} \tag{16}$$

   and

2. $$\begin{pmatrix} M \\ I \end{pmatrix}^* \begin{pmatrix} \Phi_{22} & 0 & \Phi_{12}^* & 0 \\ 0 & X & 0 & Y \\ \Phi_{12} & 0 & \Phi_{11} & 0 \\ 0 & Y^* & 0 & Z \end{pmatrix} \begin{pmatrix} M \\ I \end{pmatrix} < 0 \tag{17}$$

Hence, the proof will be done for stability and dissipativity.

A.1 Stability proof

The stability proof consists on proving that the conditions of Theorem 3.2 are equivalent to the conditions of Theorem 3.1

The first condition of Theorem 3.1 is already given by (16).
Post and pre multiplying (17) by $\begin{pmatrix} p \\ w \end{pmatrix}$ yields

$$\begin{pmatrix} p \\ q \end{pmatrix}^* \begin{pmatrix} \Phi_{11} & \Phi_{12} \\ \Phi_{12}^* & \Phi_{22} \end{pmatrix} \begin{pmatrix} p \\ q \end{pmatrix} + \begin{pmatrix} z \\ w \end{pmatrix}^* \begin{pmatrix} X & Y \\ Y^* & Z \end{pmatrix} \begin{pmatrix} z \\ w \end{pmatrix} < 0$$

Since we are interested only in stability, we consider $\begin{pmatrix} z \\ w \end{pmatrix} = \begin{pmatrix} 0 \\ 0 \end{pmatrix}$

$$\begin{pmatrix} I \\ M_{11} \end{pmatrix} \begin{pmatrix} \Phi_{11} & \Phi_{12} \\ \Phi_{12}^* & \Phi_{22} \end{pmatrix} \begin{pmatrix} I \\ M_{11} \end{pmatrix} < 0$$

which is the second condition of Theorem 3.1. Hence, the conditions of Theorem 3.2 are equivalent to the conditions of Theorem 3.1.

A.2 Dissipativity proof

Necessity The necessity is proved by supposing that $\Delta \star M$ is $\{X, Y, Z\}$ *dissipative* and proving (16) and (17). By definition: for any $\Delta \in \underline{\mathbf{\Delta}}$, the uncertain system $\Delta \star M$ is

$\{X, Y, Z\}$ *dissipative* if:

$$\begin{pmatrix} p \\ w \end{pmatrix}^* \begin{pmatrix} M_{21} & M_{22} \\ 0 & I \end{pmatrix}^* \begin{pmatrix} X & Y \\ Y^* & Z \end{pmatrix} \begin{pmatrix} M_{21} & M_{22} \\ 0 & I \end{pmatrix} \begin{pmatrix} p \\ w \end{pmatrix} < 0 \tag{18}$$

such that:

$$\begin{array}{rcl} p & = & \Delta \quad q \\ q & = & \begin{pmatrix} M_{11} & M_{22} \end{pmatrix} \begin{pmatrix} p \\ w \end{pmatrix} \end{array}$$

This last equality can be rewritten as:

$$\begin{pmatrix} I & -\Delta \end{pmatrix} \begin{pmatrix} I & 0 \\ M_{11} & M_{12} \end{pmatrix} \begin{pmatrix} p \\ w \end{pmatrix} = 0.$$

that is:

$$\begin{pmatrix} p \\ w \end{pmatrix}^* \begin{pmatrix} I & 0 \\ M_{11} & M_{12} \end{pmatrix}^* \begin{pmatrix} I \\ -\Delta^* \end{pmatrix} \begin{pmatrix} I & -\Delta \end{pmatrix} \begin{pmatrix} I & 0 \\ M_{11} & M_{12} \end{pmatrix} \begin{pmatrix} p \\ w \end{pmatrix} = 0 \tag{19}$$

Using the $\mathcal{S}$ procedure [29] and [26], condition (18) holds such that (19) if and only if there exist τ such that for any[1] $\Delta \in \underline{\mathbf{\Delta}}$

$$\begin{pmatrix} M_{21} & M_{22} \\ 0 & I \end{pmatrix}^* \begin{pmatrix} X & Y \\ Y^* & Z \end{pmatrix} \begin{pmatrix} M_{21} & M_{22} \\ 0 & I \end{pmatrix} + \cdots$$
$$\cdots + \tau \begin{pmatrix} I & 0 \\ M_{11} & M_{12} \end{pmatrix}^* \begin{pmatrix} I \\ -\Delta^* \end{pmatrix} \begin{pmatrix} I & -\Delta \end{pmatrix} \begin{pmatrix} I & 0 \\ M_{11} & M_{12} \end{pmatrix} < 0$$

which can be rewritten as:

$$\left(\begin{array}{cc} M_{21} & M_{22} \\ 0 & I \\ \hline I & 0 \\ M_{11} & M_{12} \end{array}\right)^* \left(\begin{array}{cc|c} X & Y & 0 \\ Y^* & Z & \\ \hline \multicolumn{2}{c|}{0} & \tau \begin{pmatrix} I \\ -\Delta^* \end{pmatrix} \begin{pmatrix} I & -\Delta \end{pmatrix} \end{array}\right) \left(\begin{array}{cc} M_{21} & M_{22} \\ 0 & I \\ \hline I & 0 \\ M_{11} & M_{12} \end{array}\right) < 0.$$

Let $\begin{pmatrix} \mu_1 & \mu_2 \end{pmatrix}$ be such that[2]

$$\begin{pmatrix} \mu_1 & \mu_2 \end{pmatrix}_\perp = \left(\begin{array}{cc} M_{21} & M_{22} \\ 0 & I \\ \hline I & 0 \\ M_{11} & M_{12} \end{array}\right),$$

[1] In fact, τ should depend on Δ, that is τ_Δ. As shown in [30], it can be used a continuous function $\tau(\Delta)$ on the closure of $\underline{\mathbf{\Delta}}$. But as $\underline{\mathbf{\Delta}}$ is bounded, it can be selected independent of Δ (take the maximum on the closure of $\underline{\mathbf{\Delta}}$). This fact will be used several times.

[2] $A_\perp$ denotes the orthogonal of A *i.e.* $AA_\perp = 0$

then, by applying Finsler's lemma[3] [26], we get the equivalent condition: there exists τ and η such that for any $\Delta \in \underline{\mathbf{\Delta}}$,

$$\left(\begin{array}{cc|c} X & Y & \\ Y^* & Z & 0 \\ \hline \multicolumn{2}{c|}{0} & \tau \begin{pmatrix} I \\ -\Delta^* \end{pmatrix} \begin{pmatrix} I & -\Delta \end{pmatrix} \end{array}\right) + \eta \begin{pmatrix} \mu_1^* \\ \mu_2^* \end{pmatrix} \begin{pmatrix} \mu_1 & \mu_2 \end{pmatrix} < 0$$

It is equivalent by Schur's lemma to:

$$\begin{cases} \begin{pmatrix} X & Y \\ Y^* & Z \end{pmatrix} + \eta \mu_1^* \mu_1 < 0 \\ \\ \tau \begin{pmatrix} I \\ -\Delta^* \end{pmatrix} \begin{pmatrix} I & -\Delta \end{pmatrix} + \eta \mu_2^* \mu_2 - \eta \mu_2^* \mu_1 \left[\begin{pmatrix} X & Y \\ Y^* & Z \end{pmatrix} + \eta \mu_1^* \mu_1 \right]^{-1} \eta \mu_1^* \mu_2 < 0 \end{cases}$$

Thus there exists τ, η and $\epsilon > 0$ such that for any $\Delta \in \underline{\mathbf{\Delta}}$,

$$\tau \begin{pmatrix} I \\ -\Delta^* \end{pmatrix} \begin{pmatrix} I & -\Delta \end{pmatrix} + \eta \mu_2^* \mu_2 - \eta \mu_2^* \mu_1 \left[\begin{pmatrix} X & Y \\ Y^* & Z \end{pmatrix} + \eta \mu_1^* \mu_1 \right]^{-1} \eta \mu_1^* \mu_2 - \epsilon I < 0$$

Let us define

$$\Phi = - \left(\eta \mu_2^* \mu_2 - \eta \mu_2^* \mu_1 \left[\begin{pmatrix} X & Y \\ Y^* & Z \end{pmatrix} + \eta \mu_1^* \mu_1 \right]^{-1} \eta \mu_1^* \mu_2 - \epsilon I \right).$$

Then, using Finsler's lemma, there exist τ such that for any $\Delta \in \underline{\mathbf{\Delta}}$,

$$\tau \begin{pmatrix} I \\ -\Delta^* \end{pmatrix} \begin{pmatrix} I & -\Delta \end{pmatrix} - \Phi < 0$$

is equivalent to for any $\Delta \in \underline{\mathbf{\Delta}}$,

$$\begin{pmatrix} \Delta \\ I \end{pmatrix}^* \Phi \begin{pmatrix} \Delta \\ I \end{pmatrix} > 0.$$

That is (16).

For the remaining part, let us notice that

$$\Phi + \eta \mu_2^* \mu_2 - \eta \mu_2^* \mu_1 \left[\begin{pmatrix} X & Y \\ Y^* & Z \end{pmatrix} + \eta \mu_1^* \mu_1 \right]^{-1} \eta \mu_1^* \mu_2 < 0.$$

Then by Schur's lemma, it is equivalent to

$$\left(\begin{array}{cc|c} X & Y & \\ Y^* & Z & 0 \\ \hline \multicolumn{2}{c|}{0} & \Phi \end{array}\right) + \eta \begin{pmatrix} \mu_1^* \\ \mu_2^* \end{pmatrix} \begin{pmatrix} \mu_1 & \mu_2 \end{pmatrix} < 0.$$

[3] $B^* A B < 0 \Leftrightarrow A + \eta B_\perp^* B_\perp < 0$

Applying Finsler's lemma, it is equivalent to

$$\left(\begin{array}{cc} M_{21} & M_{22} \\ 0 & I \\ \hline I & 0 \\ M_{11} & M_{12} \end{array}\right)^* \left(\begin{array}{cc|c} X & Y & \\ Y^* & Z & 0 \\ \hline \multicolumn{2}{c|}{0} & \Phi \end{array}\right) \left(\begin{array}{cc} M_{21} & M_{22} \\ 0 & I \\ \hline I & 0 \\ M_{11} & M_{12} \end{array}\right) < 0$$

which is exactly (17) after rearrangement.

Sufficiency The necessity can be proved by supposing (16) and (17) and prove that the system $\Delta \star M$ is $\{X, Y, Z\}$ dissipative.

(16) is equivalent to:

$$-\begin{pmatrix} p \\ w \end{pmatrix}^* \begin{pmatrix} I & 0 \\ M_{11} & M_{12} \end{pmatrix}^* \Phi \begin{pmatrix} I & 0 \\ M_{11} & M_{12} \end{pmatrix} \begin{pmatrix} p \\ w \end{pmatrix} < 0 \tag{20}$$

(17) after rearrangement can be written as:

$$\left(\begin{array}{cc} M_{21} & M_{22} \\ 0 & I \\ \hline I & 0 \\ M_{11} & M_{12} \end{array}\right)^* \left(\begin{array}{cc|c} X & Y & \\ Y^* & Z & 0 \\ \hline \multicolumn{2}{c|}{0} & \Phi \end{array}\right) \left(\begin{array}{cc} M_{21} & M_{22} \\ 0 & I \\ \hline I & 0 \\ M_{11} & M_{12} \end{array}\right) < 0$$

which can be decomposed to:

$$\begin{pmatrix} M_{21} & M_{22} \\ 0 & I \end{pmatrix}^* \begin{pmatrix} X & Y \\ Y^* & Z \end{pmatrix} \begin{pmatrix} M_{21} & M_{22} \\ 0 & I \end{pmatrix} + \begin{pmatrix} I & 0 \\ M_{11} & M_{12} \end{pmatrix}^* \Phi \begin{pmatrix} I & 0 \\ M_{11} & M_{12} \end{pmatrix} < 0$$

Post and pre multiplying by $\begin{pmatrix} p \\ w \end{pmatrix}$ yields

$$\begin{aligned} &\begin{pmatrix} p \\ w \end{pmatrix}^* \begin{pmatrix} M_{21} & M_{22} \\ 0 & I \end{pmatrix}^* \begin{pmatrix} X & Y \\ Y^* & Z \end{pmatrix} \begin{pmatrix} M_{21} & M_{22} \\ 0 & I \end{pmatrix} \begin{pmatrix} p \\ w \end{pmatrix} + \dots \\ &\dots + \begin{pmatrix} p \\ w \end{pmatrix}^* \begin{pmatrix} I & 0 \\ M_{11} & M_{12} \end{pmatrix}^* \Phi \begin{pmatrix} I & 0 \\ M_{11} & M_{12} \end{pmatrix} \begin{pmatrix} p \\ w \end{pmatrix} < 0 \end{aligned} \tag{21}$$

Adding (20) to (21) gives

$$\begin{pmatrix} p \\ w \end{pmatrix}^* \begin{pmatrix} M_{21} & M_{22} \\ 0 & I \end{pmatrix}^* \begin{pmatrix} X & Y \\ Y^* & Z \end{pmatrix} \begin{pmatrix} M_{21} & M_{22} \\ 0 & I \end{pmatrix} \begin{pmatrix} p \\ w \end{pmatrix} < 0$$

That is the system $\Delta \star M$ is $\{X, Y, Z\}$ dissipative.

References

[1] M. Dinh, A. Korniienko, and G. Scorletti, "Embedding of uncertainty propagation: application to hierarchical performance analysis," *IFAC Symposium on System, Structure and Control*, vol. 5, no. 1, pp. 190–195, 2013.

[2] A. Korniienko, G. Scorletti, E. Colinet, E. Blanco, J. Juillard, and D. Galayko., "Control law synthesis for distributed multi-agent systems: Application to active clock distribution networks," *IEEE American Control Conference*, pp. 4691–4696, Jun 2011.

[3] A. Korniienko, G. Scorletti, E. Colinet, and E. Blanco, "Performance control for interconnection of identical systems: Application to PLL network design," *International Journal of Robust and Nonlinear Control*, no. DOI: 10.1002/rnc.3285, 2014.

[4] S. Boyd and L. Vandenberghe, *Convex Optimization*. Cambridge University Press, 2004.

[5] M. K. H. Fan, A. L. Tits, and J. C. Doyle, "Robustness in the presence of mixed parametric uncertainty and unmodeled dynamics," *IEEE Transactions on Automatic Control*, vol. 63, no. 1, pp. 25–38, 1991.

[6] J. Doyle, "Analysis of feedback systems with structured uncertainties," *IEEE Proceddings*, vol. 129-D, p. 242:250, 1982.

[7] A. Megretski and A. Rantzer, "System analysis via integral quadratic constraints," *IEEE Transaction On Automatic Control*, vol. 42, no. 6, 1997.

[8] C. Y. Kao, U. Jönsson, and H. Fujioka, "Characterization of robust stability of a class of interconnected systems," *Automatica*, vol. 45, no. 1, pp. 217–224, 2009.

[9] U. Jönsson, C. Y. Kao, and H. Fujioka, "A popov criterion for networked systems," *Systems and Control Letters*, vol. 56, no. 9-10, pp. 603–610, 2007.

[10] U. Jönsson and C. Y. Kao, "A scalable robust stability criterion for systems with heterogeneous LTI components," *IEEE Transactions on Automatic Control*, vol. 55, no. 10, pp. 2219– 2234, 2010.

[11] I. Letas and G. Vinnicombe, "Scalabe decentralized robust stability certificates for networks of interconnected heterogenous dynamical systems," *IEEE Transaction on Automatic Control*, vol. 51, no. 10, pp. 1613–1626, 2006.

[12] M. Anderson, A. Hanson, S. Pakazad, and A. Rantzer, "Distributed robust stability analysis of interconnected uncertain systetems," *IEEE Conference on Decision and Control*, pp. 1548–1553, Dec 2012.

[13] M. Anderson, S. Pakazad, A. Hanson, and A. Rantzer, "Robust stability analysis of sparsely interconnected uncertain systems," *IEEE Transactions on Automatic Control*, vol. 59, no. 8, pp. 2151–2156, 2014.

[14] J. R. S. Blair and B. W. Peyton, "An introduction to chordal graphs and clique trees," in *Graph Theory and Sparse Matrix Computation* (J. R. G. J. A. George and J. W. H. Liu, eds.), vol. 56 of *The IMA Volumes in Mathematics and its Applications*, pp. 1–29, Springer New York, 1993.

[15] M. G. Safonov, "Propagation of conic model uncertainty in hierarchical systems," *IEEE Transactions on Automatic Control*, vol. 28, no. 6, pp. 701–709, 1983.

[16] M. Dinh, A. Korniienko, and G. Scorletti, "Convex hierrachical analysis for the performance of uncertain large scale systems," *IEEE Conference on Decision and Control*, pp. 5979– 5984, Dec 2014.

[17] I. Postlethwaite, J. M. Edmunds, and A. G. J. Macfarlane, "Principal gains and principal phases in the analysis of linear multivariable feedback systems," *IEEE Transactions on Automatic Control*, vol. 26, no. 1, pp. 32–46, 1981.

[18] D. H. Owens, "The numerical range: A tool for robust stability studies?," *Systems and Control Letters*, no. 3, pp. 153–158, 1984.

[19] P. Harshavardhana and E. A. Jonckheere, "Spectral factor reduction by phase matching: the continuous-time single-input single-output case," *International Journal of Control*, vol. 42, no. 1, pp. 43–63, 1985.

[20] J. R. Bar-On and E. A. Jonckheere, "Phase margin for multivariable control systems," *International Journal of control*, vol. 52, no. 2, pp. 485–498, 1990.

[21] A. İftar and Ü. Özgüner, "Modeling of uncertain dynamics for robust controller design in state space," *Automatica*, vol. 27, no. 1, pp. 141–146, 1991.

[22] A. Tits, V. Balakrishnan, and L. Lee, "Robustness under bounded uncertainty with phase information," *IEEE Transactions on Automatic Control*, vol. 44, no. 1, pp. 50–65, 1999.

[23] V. Chellaboina, W. M. Haddad, and A. Kamath, "The structured phase margin for robust stability analysis of linear systems with phase and time delay uncertainties," *International Journal of Control*, vol. 81, no. 8, pp. 1298–1310, 2008.

[24] G. Scorletti, "Robustness analysis with time-delays," in *IEEE Conference on Decision and Control*, pp. 3824–3829, Dec 1997.

[25] J. Doyle, A. Packard, and K. Zhou, "Review of LFTs, LMIs, and μ," *Proceedings of the 30th IEEE Conference on Decision and Control*, vol. 2, pp. 1221– 1232, 1991.

[26] S. Boyd, L. E. Ghaoui, E. Feron, and V. Balakrishnan, "Linear matrix inequalites in system and control theory," *SIAM Studies in Applied Mathematics*, vol. 15, 1994.

[27] Y. Nesterov and A. Nemirovski, *Interior Point Polynomial Methods in Convex Programming: Theory and Applications*. SIAM, 1994.

[28] G. Scorletti, X. Bombois, M. Barenthin, and V. Fromion, "Improved efficient analysis for systems with uncertain parameters," *IEEE Conference on Decision and Control*, pp. 5038–5043, Dec 2007.

[29] V. Jakubovič, "The $\mathcal{S}$-procedure in nonlinear control theory," *Vestnik Leningrad Univ. (russian) Vestnik Leningrad Univ. Math. (amer.)*, vol. 4 (amer.), no. 1 (russian), 1971 (russian) 1977 (amer.).

[30] Y.-S. Chou, A. Tits, and V. Balakrishnan, "Stability multipliers and μ upper bounds: connections and implications for numerical verification of frequency domain conditions," *IEEE Transaction On Automatic Control*, vol. 44, no. 5, pp. 906–913, 1999.