HAL
open science

Effect on methane production of the addition of fatty by-products from the refining of vegetable oil in co-digestion

Michel Torrijos, Philippe Sousbie, L. Badey, Jean-Philippe Steyer

To cite this version:

Michel Torrijos, Philippe Sousbie, L. Badey, Jean-Philippe Steyer. Effect on methane production of the addition of fatty by-products from the refining of vegetable oil in co-digestion. ADSW&EC - International IWA-Symposium on Anaerobic Digestion of Solid Waste and Energy Crops, International Water Association (IWA). INT., Aug 2011, Vienne, Austria. hal-01189761

HAL Id: hal-01189761

https://hal.science/hal-01189761v1

Submitted on 1 Sep 2015

HAL is a multi-disciplinary open access archive for the deposit and dissemination of scientific research documents, whether they are published or not. The documents may come from teaching and research institutions in France or abroad, or from public or private research centers.

L'archive ouverte pluridisciplinaire **HAL**, est destinée au dépôt et à la diffusion de documents scientifiques de niveau recherche, publiés ou non, émanant des établissements d'enseignement et de recherche français ou étrangers, des laboratoires publics ou privés.

Effect on Methane Production of the Addition of Fatty By-Products from the Refining of Vegetable Oil in Co-Digestion

M. Torrijos*, P. Sousbie*, L. Badey**, F. Bosque** and J.P. Steyer*

* INRA, UR50, Laboratoire de Biotechnologie de l'Environnement, Avenue des Etangs, Narbonne, F-11100, France.
(E-mail: torrijos@supagro.inra.fr, sousbie@supagro.inra.fr, steyer@supagro.inra.fr)
** ITERG, 11, Rue Gaspard Monge, Parc industriel Bersol 2, Pessac, F-33600, France.
(E-mail: f.bosque@iterg.com, l.badey@iterg.com)

Abstract
The purpose of this work was to investigate the effects of the addition of by-products from the refining of vegetable oil on the behavior of co-digestion reactors treating a mixture of grass, cow dung and fruit and vegetable wastes. Three by-products were used: one soapstocks, one used winterisation earth and one skimming of aeroflotation of the effluents. Three 15-L reactors were run in parallel and fed 5 times a week. In a first phase of 4 weeks, the three reactors were fed with the co-digestion substrates alone (grass, cow dung and fruit and vegetable wastes) at an OLR of 1.5 g VS/kg.d. Then, one of the three by-products from the refining of oil was added to the feed of each reactor generating a 33% increase in the OLR (2 gVS/kg.d). The results show that the addition of by-products from the refining of oil is an efficient way to increase the methane production of co-digestion reactors thanks to their high methane yield (0.77 – 0.80 l CH_4/gVS). Indeed, in this work, it was possible to increase by 60 to 65 % the methane production of the reactors by a 33% increase in the OLR thanks to the addition of the by-products.

Keywords
Anaerobic digestion, co-digestion, solid waste, fed-batch, fatty residues, oil refining.

INTRODUCTION

An interesting way to improve yields of anaerobic digestion of solid waste is co-digestion that is to say the use of several co-substrates in a centralized digester (Mata-Alvarez, 2000). There are several advantages for co-digestion. For example, the mixing of co-substrates can make it possible to improve the biogas yield due to a positive interaction between the substrates, such as the supply of missing nutrients by one of the co-substrates or a dilution effect if some toxic compounds are present in one of the substrates. The use of co-substrates can also help to adjust the moisture content of the feed to the required value and of course, to optimize the costs by sharing the treatment facilities with an effect of economy of scale.

Animal manure and slurries represent a very large resource, with more than 1,500 mill. Tons produced per year in the European Community (Holm-Nielsen et al, 2009), but have quite a low methane potential. Co-digestion with other biodegradable wastes is thus a way to increase the biogas yield and then to improve the economy of a biogas plant (Holm-Nielsen et al, 2009; Neves et al, 2009b). However, the addition of co-substrates has to be handled properly to prevent operating problems. Indeed, Nielsen (2008) showed that process imbalances occur frequently in Danish centralized biogas plants treating manure in combination with industrial wastes. The problems met are mainly related to the composition and handling of the substrates leading to inhibitions by high concentrations of ammonia and long chain fatty acids and to foaming.

Due to their high methane potential (Davidsson et al, 2008; Torrijos et al, 2008), the addition of fatty wastes to a digester is an attractive option to increase the methane yield of a reactor and several authors have operated successfully co-digestion reactors with the addition of such wastes. In this manner, Fernández et al (2005) operated anaerobic digesters treating simulated synthetic organic fraction of municipal solid wastes with fats of animal and vegetable origin and found total fat removal over 88%. During the co-digestion of sludge from a large wastewater treatment plant with sludge from grease traps (Davidsson et al, 2008), an increase in the methane yield of 9-27% was observed when 10-30% of sludge from grease traps was added. In two other studies (Neves et al, 2009a, b), pulses of an oily waste effluent from a canned fish processing industry were added (9 to 18 g $COD_{oil}/l_{reactor}$) to completely mixed reactors fed with dairy cow manure and food waste. Concentrations up to 15 g $COD_{oil}/l_{reactor}$ had a positive effect on methane production whereas for the highest fat concentration of 18 g $COD_{oil}/l_{reactor}$, a persistent inhibition of the process was observed.

The refining of crude oil, which is produced by the crushing of the oil seeds, aims at separating various "impurities" from the oil and generates by-products and residues with high fat content. Three types of processes are used: chemical or physical refining used for the production of edible oil and semi-refining used for the production of biodiesel. In chemical refining, the main steps generating residues are (O'Brien, 2009): (i) Acid-conditioning followed by neutralization, producing a residue called "Soapstock" which contains soaps, gums (phospholipids), various impurities, oxidation products and neutral oil in the form of an emulsion; (ii) Discoloration, which requires the use of earth as an agent of discoloration and generates a residue called "Used Bleaching Earth (UBE)"; (iii) Winterisation, to remove waxes present in some vegetable oils (sunflower and corn. It requires the use of earth and generates a residue called "Used Winterisation Earth (UWE)"; (iv) Deodorizing which generates "Condensates" containing sterols, tocopherols, oxidation products,…. Physical refining does not include the acid-conditioning-neutralization step but includes an acid-gum removal step generating a residue containing mainly gums. The semi-refining process is generally close to the physical refining process and the oil produced is used for biodiesel production. Furthermore, the wastewater generated during refining undergoes before discharge, usually to a collective WWTP, a physico-chemical treatment generating "Air Flotation Greases" to be addressed.
The by-products and residues produced during refining of crude oil are very interesting substrates for co-digestion as they have very high methane yields (Torrijos et al, 2008) mainly linked to their high fat content.

The aim of this work was to investigate the effects of the addition of three main by-products from the refining of crude oil on methane production by reactors co-digesting a mixture of grass, cow dung, and fruit and vegetable waste.

MATERIALS AND METHODS

Substrates for co-digestion

Three substrates were used in this work in order to simulate a co-digestion mixture: Grass, Cow Dung (CD) and fruit and vegetable waste (FVW). Grass and CD were crushed in a Blik BB 230 crusher equipped with stainless steel rotating blades and then stored at – 20°C. FVW was made by mixing 20 % in weight of each of the following fruits and vegetables: Apple, banana, carrot, potatoes, and salad. The mixture of fruits and vegetables was grated to an approximate size of 1 cm with a grinder and then stored at – 20°C. For the whole experiment, four different batches of grass and one batch of CD and FVW were used for the feeding of the reactors. The composition of the three substrates is presented in table 1.

By-products from the refining of vegetable oil

Three by-products from the refining of vegetable oil have been used in this work: (i) One soapstocks (SOAP), 2/3 from refining of rape oil and 1/3 from refining of sunflower oil; (ii) One used winterisation earth (UWE) from refining of sunflower oil; (iii) One skimming of aeroflotation of the effluents (Aeroflot).

Table 1. Composition of the three co-digestion substrates.

	TS (g/kg)	VS (g/kg)	VS/TS (%)
Grass	378 +/- 50	306 +/- 41	81
Cow Dung (CD)	360	320	89
Fruit and Vegetable Waste (FVW)			
Apple	138	136	99
Banana	159	150	94
Carrot	119	112	94
Potatoes	169	162	96
Salad	62	51	82
Mixture of the 5 FV	128	121	95

Reactors

The experiments were carried out in stainless steel double-walled reactors of 15-L total volume and 10-kg effective mass (see figure 1), maintained at 35 °C by a regulated water bath. Mixing in the reactors was done 5 min/h by a system of mechanical stirring at 10 rpm. The feed was added manually five times a week through a 17-cm opening provided on the top part of the reactor. Once a week, the reactors were weighed and excess solids were withdrawn to keep the mass of solids in the reactors at 10 kg. The volume of biogas produced was measured on-line by Milligascounter MGC-1 flow meters (Ritter gas meters) fitted with a 4-20 mA output and biogas composition was analyzed every week. The "Modular SPC" software developed at the INRA laboratory was used to log the data. The assessment of the volumes of biogas and methane produced was done per week.

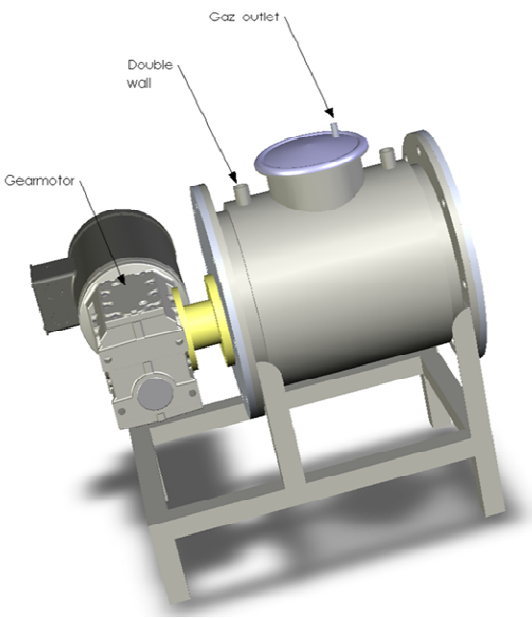

Figure 1. Schematic diagram of a laboratory scale co-digestion reactor.

Inoculum
The reactors were seeded with 10 kg of anaerobic sludge taken at an industrial-scale anaerobic UASB reactor treating the effluents of a sugar industry. The initial volatile solids (VS) concentration in the reactors was around 110 g VS/kg.

Operation of the reactors
Three reactors were run in parallel. During the four first weeks of the experiment (phase 1), the reactors were fed with the mixture of the three co-digestion substrates alone at an organic loading rate (OLR) of 1.5 g VS/kg.d. In a second phase of eight weeks, the OLR was increased up to 2 g VS/kg.d by the addition of a different by-product from oil refining (SOAP, UWE or Aeroflot) in each reactor. Finally, in a third phase, the operating conditions were brought back to the initial conditions that is to say no addition of by-products and OLR of 1.5 g VS/kg.d.

Sampling and analysis
Soluble COD was measured by a colorimetric method (Jirka, 1975) using Hach 0-1,500 mg/l vials. Other parameters (TS, VS) were measured following Standard Methods, APHA (1992).
Volatile fatty acid (VFA) concentration was measured using a gas chromatograph (GC-8000, Fisons instruments) equipped with a flame ionization detector and an automatic sampler (AS 800, Fisons instruments). The column used was a semi-capillar Econocap FFAP (Alltech) column with 15 m length, 0.53 cm diameter and Phase EC^{TM} 1000 film 1.2 µm. The temperature of the spitless injector was 250°C, the temperature of the detector was 275°C. The temperature increased from 80°C to 120°C in 3 min. The carrier gas was nitrogen (25 kPa). The volume of sample injected was 1 µl. The calibration was made from a mixture of 6 acids (standard solution): acetic (C2), propionic (C3), butyric (C4), isobutyric (iC4), valeric (C5) and iso-valeric (iC5) acids at 1 g/l each. The calibration range was 0.25 to 1 g/l by dilution of the standard solution. The internal standard method (1 g of ethyl-2-butyric acid in 1 l of water acidified with 50 ml of H_3PO_4) was used to measure total VFA concentration by mixing 1/1 volume of the internal standard solution and the sample or the standard solution. The margin for error of this measurement was between 2 % and 5 % with a quantification threshold of 0.1 g/l.
Biogas composition was determined using a gas chromatograph (Shimadzu GC-8A) connected to a C-R8A integrator and equipped with a CTRI Alltech column. The following gases were measured: CO_2, H_2, O_2, N_2 and CH_4. The column was made up of 2 concentric columns. The 3.175 mm-diameter inner column was filled with Sillicagel. It allowed the separation of CO_2 from the other gases. The other gases were separated in the 6.350 mm-diameter outer column filled with a molecular sieve. The carrier gas was argon at 2.8 bars. The temperatures were 30°C for the oven and 100°C for the injector and the detector. The detection of gaseous compounds was done using a thermal conductivity detector and the intensity of current was 80 mA. The volume of injected biogas was 1 ml. The calibration was done with a standard gas composed of 25 % of CO_2, 5 % of H_2, 2 % of O_2, 10 % of N_2 and 58 % of CH_4. The margin for error of this measurement was 5 %.

RESULTS AND DISCUSSION

Composition of the co-digestion feed and by-products
The co-digestion feed was prepared by mixing 45% of Grass, 30% of CD and 25% of FVW. Six different batches of co-digestion feed were prepared during this work with an average composition of 320 +/- 14 g of TS/kg, 265 +/- 9 g of VS/kg and a ratio VS/TS of 83%.
The composition of the three by-products from the refining of oil is presented in table 2. Two by-products (SOAP and Aeroflot) had a high content in organic matter with a VS/TS ratio of 85% and

92% respectively. UWE is made-up of the contaminated mineral earth added in the process to remove the waxes by winterization and thus, it has a low VS/TS ratio (69%).

Table 2. Composition of the three by-products from the refining of vegetable oil.

	TS (g/kg)	VS (g/kg)	VS/TS (%)
SOAP	193	164	85
UWE	1 000	690	69
Aeroflot	300	277	92

Example of results with soapstocks

The addition of soapstocks (SOAP) is presented as an example of the results obtained and Figure 2 shows the quantity of VS added per week and the corresponding volumes of biogas and of methane produced per week for the three phases.

Figure 2 shows that during the first four weeks of operation (phase 1), with the addition of the three co-digestion substrates alone at an OLR of 1.5 g VS/kg.d, the volumes of biogas and methane produced were on average 55.7 l/week and 32.5 l/week respectively. The methane yield with the three co-substrates was then 0.43 l CH_4/g VS.

In phase 2, after the increase of the OLR to 2 g VS/kg.d, by the addition of SOAP while maintaining constant the quantity of the three co-substrates added, the volumes of biogas and methane produced increased dramatically with average values of 84.6 l/week and 52.1 l/week. The OLR was increased from 1.5 to 2 kg VS/kg.d that is to say by 33 % but the methane production was increased by 60% (+19.6 l) due to the high methane potential of the fatty by-product added. By comparing the data from phases 1 and 2, it was possible to estimate the volume of methane produced specifically from SOAP and then its methane potential which was very high with 0.78 l CH_4/g VS.

During the last two weeks of the experiment (phase 3), the reactor was fed again with the three co-digestion substrates alone at an OLR of 1.5 g VS/kg.d. The results obtained are very close to those obtained in phase 1 with 56 l of biogas and 32.1 l of methane produced per week and a methane yield of 0.41 l CH_4/g VS.

The solids concentrations in the reactor were fairly constant during all the experiment with TS content in the range of 13.1-13.5% and VS content in the range 10.1-10.7%. No accumulation of VFA was observed during the whole experiment and the VFA concentration was always less than 0.3 g/l indicating that there was no overloading at the OLR used.

The analysis of the dynamics of methane production at the beginning of the experiment and at the beginning of phase 2 brings interesting information about the adaptation of the sludge to the complex substrates used in this work. The sludge used for the seeding of the reactors was withdrawn from a UASB reactor treating the effluents of a sugar factory but, in the operating conditions used, the results do not show any adaptation phase of the sludge to the three co-substrates. Indeed, in phase 1, biogas production was at its maximum from the first week of feeding indicating that the sludge could metabolize immediately the organic matter fed without any lag phase. The same observation can be made at the beginning of phase 2 showing that SOAP was immediately metabolized by the anaerobic sludge. In phase 3, biogas production decreased very rapidly when the addition of SOAP was stopped indicating that there was no residual biogas production from SOAP and then that non- degraded SOAP did not accumulate in the reactor during phase 2.

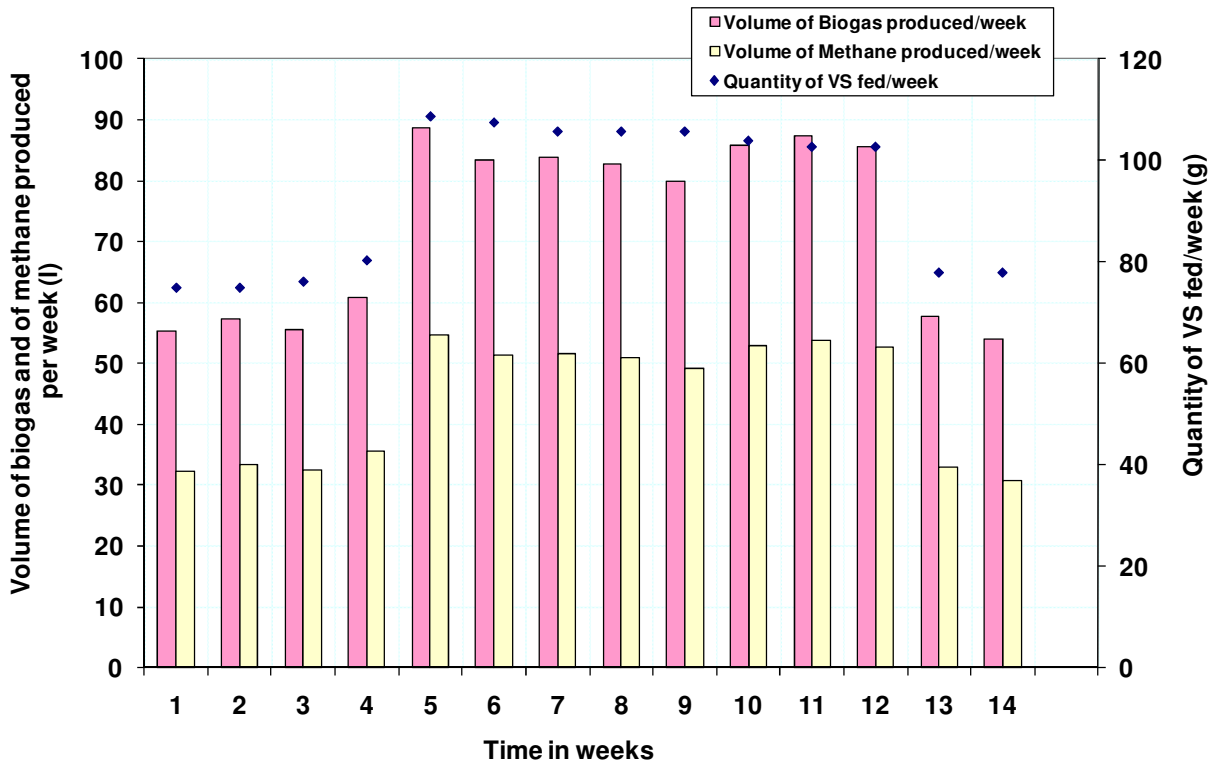

Figure 2. Evolution of the quantity of VS added per week and of the volumes of biogas and methane produced per week.

Results with the 3 by-products

Table 3 summarizes the results obtained for the three by-products SOAP, UWE and Aeroflot. In phases 1 and 3, the three reactors were fed with the same mixture of three co-digestion substrates and were operated in the same conditions. Table 3 shows that the three reactors behaved quite similarly in these two periods with an average production per reactor of 54.2 l of biogas/week and 31.4 l of methane/week in phase 1 and 56 l of biogas/week and 32 l of methane/week in phase 3. The methane yield of the mixture of the co-digestion substrates was very close with an average value of 0.42 and 0.41 l CH_4/g VS respectively in phases 1 and 3.

In the second phase, the OLR of each reactor was increased by 33% (+ 0.5 g VS/kg.d) during eight weeks by the addition of one of the three by-products (SOAP, UWE or Aeroflot). For the three reactors, the addition of the by-product resulted in a significant increase in the volume of methane produced with + 19.6 l CH_4/week (+ 60%) for SOAP, + 19.2 l CH_4/week (+ 63%) for UWE and + 20.1 l CH_4/week (+ 65%) for Aeroflot.

The methane yield of each of the by-product from oil refining was estimated by the difference between the methane production of phases 2 and 1. The three by-products had very high and close methane yields (between 0.77 and 0.80 l CH_4/g VS). These results are in agreement with the data of a previous study (Torrijos et al, 2008) where methane yields of different by-products from oil refining were measured in fed-batch reactors. Indeed, a methane yield of 0.735 l CH_4/g VS was measured for UWE (called UWC in the paper) and of 0.846 l CH_4/g VS for SOAP (called Neutralization Paste in the paper).

The results about reactor behavior in table 3 do not show any significant TS or VS accumulation for the reactors fed with SOAP and Aeroflott. However, for UWE, an increase in TS was observed due to the addition of a by-product with a high mineral content (VS/TS of UWE = 69%). During phase 2, VS removal was calculated to be 75% on average in the three reactors which is close to the data reported by Fernández et al (2005) for co-digestion of simulated organic fraction of municipal solid

wastes and fats (VS removal of 73%) but can be considered high when compared with values for other organic wastes (Davidsson et al, 2008; Neves et al, 2009a). No volatile fatty acids (VFA) accumulation was observed in the three reactors indicating that all the VFA produced were eliminated without any overloading.

Table 3. Results obtained with the three by-products from the refining of vegetable oil.

By-product	SOAP	UWE	Aeroflot
Phase 1: co-digestion			
Volume of biogas produced/week (l/w)	55.7	53.2	53.8
% CH_4 in biogas	58.4	57.3	57.8
Volume of methane produced/week (l/w)	32.5	30.5	31.1
CH_4 yield (l CH4/g VS)	0.43	0.41	0.42
Phase 2: co-digestion + by-products			
Volume of biogas produced/week (l/w)	84.6	87.5	82.9
% CH_4 in biogas	61.6	56.8	61.8
Volume of methane produced/week (l/w)	52.1	49.7	51.2
Additional Volume of CH_4 produced	19.6	19.2	20.1
% of increase in CH_4 production	60	63	65
CH_4 yield of the by-product alone (l CH4/g VS)	0.78	0.77	0.80
Phase 3: co-digestion			
Volume of biogas produced/week (l/w)	56	56	56
% CH_4 in biogas	57.3	57.1	57.1
Volume of methane produced/week (l/w)	32.1	32	32
CH_4 production of the by-product (l CH4/g VS)	0.41	0.41	0.41
Reactor behavior			
% TS initial / final	13.1 / 13.5	13.6 / 15.3	14 / 143
% VS	10.7 / 10.1	11.2 / 11.1	11.5 / 10.9
Maximum VFA concentration	< 0.3 g/L	< 0.3 g/L	< 0.3 g/L

CONCLUSIONS

The addition of by-products from the refining of vegetable oil in co-digestion reactors treating a mixture of grass, cow dung and fruit and vegetable wastes made it possible to increase dramatically the volume of methane produced by the reactors. Indeed, the effect of a 33% increase of the OLR (1.5 to 2 g VS/kg.d) by the addition of the by-products was an increase of between 60 and 65% in the volume of methane produced. The methane yield of the by-products added was found to be very high (between 0.77 and 0.80 l CH_4/g VS) which is close to the data reported in another study for the same kind of by-products. Another important conclusion of this work is that the sludge used for the seeding of the reactors was very efficient as it could start metabolizing the complex substrates without any lag phase.

ACKNOWLEDGEMENTS: The authors gratefully acknowledge the ADEME (French environment and energy management agency), ITERG (French Institute for Fats and Oils) and the following companies: Daudruy Van Cauwenberghe, Desmet Ballestra, Lesieur, Provence Huiles and Saipol, for Providing Financial support.

REFERENCES

APHA (American Public Health Association) (1992) *Standard Methods for the examination of water and wastewater*. L. S. Clesceri, A.E. Greenberg and R.R. Trussell eds, 18th edition.

Davissson A., Lövstedt C., la Cour Jensen J., Gruvberger C. and Aspegren H. (2008) Co-digestion of grease trap sludge and sewage sludge. *Waste Management* 28, 986-992.

Fernández A., Sánchez A. and Font X. (2005) Anaerobic co-digestion of a simulated organic fraction of municipal solid wastes and fats of animal and vegetable origin. *Biochemical Engineering* Journal 26, 22-28.

Holm-Nielsen J.B., Al Seadi T. and Oleskowicz-Popiel P. (2009) The future of anaerobic digestion and biogas utilization. *Bioresource Technology* 100, 5478-5484.

Jirka A.M. and Carter M.J. (1975) Micro semiautomated analysis of surface and wastewaters for chemical oxygen demand. *Analytical Chemistry*, vol. 47(8), pp. 1397-1402.

Mata-Alvarez J., Macé S. and Llabrés P. (2000) Anaerobic digestion of organic solid wastes. An overview of research achievements and perspectives. *Bioresource Technology* 74, 3-16.

Neves L., Oliveira R. and Alves M.M. (2009a) Co-digestion of cow manure, food waste and intermittent input of fat. *Bioresource Technology* 100, 1957-1962.

Neves L., Oliveira R. and Alves M.M. (2009b) Fate of LCFA in the co-digestion of cow manure, food waste and discontinuous addition of oil. *Water Research* 43, 5142-5150.

Nielsen H.B. and Angelidaki I. (2008) Codigestion of manure and industrial organic waste at centralized biogas plants: process imbalances and limitations. *Water Science & Technology* 58.7, 1521-1528.

O'Brien R.D. (2009) Fats and Oils: Formulating and Processing for Applications, Third Edition. pp. 73-196, CRC Press.

Torrijos M., Arun Kumar Thalla, Sousbie P., Bosque F. and Delgenès J. P. Anaerobic digestion of residues from production and refining of vegetable oils as an alternative to conventional solutions. *Water Science & Technology* 58.9, 1871-1878.