HAL
open science

QPTAS for Weighted Geometric Set Cover on Pseudodisks and Halfspaces

Nabil Mustafa, Rajiv Raman, Saurabh Ray

To cite this version:

Nabil Mustafa, Rajiv Raman, Saurabh Ray. QPTAS for Weighted Geometric Set Cover on Pseudodisks and Halfspaces. SIAM Journal on Computing, 2015. hal-01188992

HAL Id: hal-01188992

https://hal.science/hal-01188992v1

Submitted on 1 Sep 2015

HAL is a multi-disciplinary open access archive for the deposit and dissemination of scientific research documents, whether they are published or not. The documents may come from teaching and research institutions in France or abroad, or from public or private research centers.

L'archive ouverte pluridisciplinaire **HAL**, est destinée au dépôt et à la diffusion de documents scientifiques de niveau recherche, publiés ou non, émanant des établissements d'enseignement et de recherche français ou étrangers, des laboratoires publics ou privés.

QPTAS for Weighted Geometric Set Cover on Pseudodisks and Halfspaces*

Nabil H. Mustafa †
Université Paris-Est,
Laboratoire d'Informatique Gaspard-Monge,
Equipe A3SI, ESIEE Paris.
mustafan@esiee.fr

Rajiv Raman
Dept. of Computer Science.
IIIT, Delhi.
rajiv@iiitd.ac.in

Saurabh Ray
Computer Science, New York University, Abu Dhabi.
saurabh.ray@nyu.edu

Abstract

Weighted geometric set-cover problems arise naturally in several geometric and non-geometric settings (e.g. the breakthrough of Bansal and Pruhs (FOCS 2010) reduces a wide class of machine scheduling problems to weighted geometric set-cover). More than two decades of research has succeeded in settling the $(1+\epsilon)$-approximability status for most geometric set-cover problems, except for some basic scenarios which are still lacking. One is that of weighted disks in the plane for which, after a series of papers, Varadarajan (STOC 2010) presented a clever *quasi-sampling* technique, which together with improvements by Chan *et al.* (SODA 2012), yielded an $O(1)$-approximation algorithm. Even for the unweighted case, a PTAS for a fundamental class of objects called pseudodisks (which includes halfspaces, disks, unit-height rectangles, translates of convex sets etc.) is currently unknown. Another fundamental case is weighted halfspaces in $\mathbb{R}^3$, for which a PTAS is currently lacking. In this paper, we present a QPTAS for all of these remaining problems. Our results are based on the separator framework of Adamaszek and Wiese (FOCS 2013, SODA 2014), who recently obtained a QPTAS for weighted independent set of polygonal regions. This rules out the possibility that these problems are APX-hard, assuming **NP** $\not\subseteq$ **DTIME**$(2^{polylog(n)})$. Together with the recent work of Chan and Grant (CGTA 2014), this settles the APX-hardness status for all natural geometric set-cover problems.

1 Introduction

One of the fundamental optimization problems is the set-cover problem: given a range space $(X, \mathcal{R})$ consisting of a set X and a set $\mathcal{R}$ of subsets of X called the *ranges*, the objective is to compute a minimum-sized subset of $\mathcal{R}$ that covers all the points of X. Unfortunately in the general case, it is strongly NP-hard; worse, it is NP-hard to approximate the minimum set-cover within a factor of $c \log n$ of the optimal [27] for some constant c.

A natural extensively-studied occurrence of the set-cover problem is when the ranges are derived from geometric objects. For example, given a set P of n points in the plane and a set $\mathcal{R}$ of disks, the set-cover

*A preliminary version has appeared in FOCS 2014 [22].

†The work of Nabil H. Mustafa in this paper has been supported by the grant ANR SAGA (JCJC-14-CE25-0016-01).

problem for disks asks to compute a minimum cardinality subset of disks whose union covers all the points of P. Unfortunately, computing the minimum cardinality set-cover remains NP-hard even for basic geometric objects, such as unit disks in the plane. Effort has therefore been devoted to devising approximation algorithms for geometric set-cover problems (see [3, 9, 8, 7, 15, 12, 24, 5, 10, 6, 23, 11, 26] for a few examples). Nearly all the effort has been for the following natural and fundamental categories of geometric objects: *halfspaces*, *balls* (and generally, *pseudodisks*), *axis-parallel rectangles*, *triangles* and *objects parameterized by their union-complexity* (a set of regions $\mathcal{R}$ has union complexity $\phi(\cdot)$ if the boundary of the union of any r of the regions has at most $r\phi(r)$ intersection points). An important version is the *weighted* setting, where one seeks to find the minimum weight set-cover (e.g., see the breakthrough of Bansal and Pruhs [4] who reduced a broad class of machine scheduling problems to weighted set-cover problems).

Research during the past three decades has, in fact, been able to largely answer the question of the existence of a PTAS, or provability of APX-hardness for these problems for the uniform case, where one is minimizing the cardinality of the set-cover. For the more general weighted case, there has been considerable progress recently – an $O(\log \phi(\text{OPT}))$-approximation as a function of the union-complexity is possible via the quasi-uniform sampling technique of Varadarajan [29] and its improvement by Chan *et al.* [6]. On the other hand, recently Chan and Grant [5] proved APX-hardness results for the set-cover problem for a large class of geometric objects. We also point out that for any integer s, there exist $O(s)$-sided polygons with union complexity $n2^{\alpha(n)^{O(s)}}$ for which set-cover is inapproximable within $\Omega(\log s)$. Also, as any set-system with sets of size at most s can be realized by halfspaces in $\mathbb{R}^{2s}$, an $\Omega(\log d)$ lower-bound follows for approximability of halfspaces set-cover in $\mathbb{R}^d$. This lower-bound requires $d \geq 4$, leaving open the interesting question of approximation schemes for weighted halfspaces in $\mathbb{R}^3$.

See the table for the current status of geometric set-cover. The four open cases present a challenge as the current state-of-the-art methods hit some basic obstacles: the approximation algorithms for weighted halfspaces, balls and pseudodisks use LP-rounding with ϵ-nets [29, 6], and so provably cannot give better than $O(1)$-approximation algorithms. LP rounding was avoided by the use of local-search technique [23] to give a PTAS for halfspaces ($\mathbb{R}^3$) and disks ($\mathbb{R}^2$); however i) for fundamental reasons it is currently limited to the unweighted case, and ii) does not extend to pseudodisks.

Object	**Uniform**	**Weighted**
Halfspaces ($\mathbb{R}^2$)	Exact [**?**]	Exact [**?**]
Halfspaces ($\mathbb{R}^3$)	PTAS [23]	?
Halfspaces ($\mathbb{R}^4$)	APX-H [5]	APX-H [5]
Balls ($\mathbb{R}^2$)	PTAS [23]	?
Pseudodisks ($\mathbb{R}^2$)	?	?
Balls ($\mathbb{R}^3$)	APX-H [5]	APX-H [5]
A-P Rects ($\mathbb{R}^2$)	APX-H [5]	APX-H [5]
A-P Rects ($\mathbb{R}^d$)	APX-H [5]	APX-H [5]
Triangles ($\mathbb{R}^2$)	APX-H [12]	APX-H [12]
Linear U-C ($\mathbb{R}^2$)	APX-H [12]	APX-H [12]

In this paper, we make progress on the approximability status of the remaining four open cases by presenting a quasi-polynomial time approximation scheme (QPTAS) for all these problems. This rules out the possibility that these problems are APX-hard, assuming **NP** $\not\subseteq$ **DTIME**$(2^{polylog(n)})$. Together with the previous work showing hardness results or PTAS, this settles the APX-hardness status for all natural geometric set-cover problems.

The motivation of our work is the recent progress on approximation algorithms for another fundamental geometric optimization problem, maximum independent sets in the intersection graphs of geometric objects, where $(1+\epsilon)$-approximation algorithms (or even constant factor approximation algorithms) are not known for many objects. In a recent breakthough, Adamaszek and Wiese [1, 2] presented a QPTAS for computing weighted maximum independent set for a variety of geometric objects (e.g., axis-parallel rectangles, line-segments, polygons with polylogarithmically many sides) in the plane (the algorithm runs in time

$2^{poly(\log n/\epsilon)}$). We now sketch their main idea for approximating the maximum independent set for weighted line-segments in the plane, for which let OPT be the optimal solution. The key tool is the existence of a closed polygonal curve $\mathcal{C}$ (with few vertices) that intersects segments in OPT with small total weight, and at least a constant fraction of the total weight of OPT lies in the two regions created by $\mathcal{C}$. Hence one can guess the curve $\mathcal{C}$ (which does not require knowing OPT) [1], and then return the union of solutions of the two sub-problems (which are solved recursively). With appropriate parameters, the loss incurred by throwing away the segments intersecting $\mathcal{C}$ is at most ϵ-fraction of the optimal solution, yielding a $(1-\epsilon)$-approximation in quasi-polynomial time.

Let us consider how the above technique can be made to work for the set cover problem. Assume that we are given a set P of n points and a set $\mathcal{R}$ of m weighted disks and our goal is to pick a minimum-weight set-cover from $\mathcal{R}$. We can again consider the optimal solution OPT and hope to find a curve $\mathcal{C}$ which intersects objects in OPT with small total weight and has a constant fraction of the weight of OPT in the interior as well as the exterior. However such a curve does not always exist – consider, e.g., a case where the optimal solution consists of a set of disks that share a common point (not necessarily in P). Crucially, unlike the independent set problem, the objects in the optimal set-cover are not disjoint. This dooms any separator-based approaches for the set-cover problem.

Surprisingly, we show that nevertheless there still exists a curve $\mathcal{C}$ (which may, in fact, intersect all the disks in $\mathcal{R}$!) such that solving the induced sub-problems in the interior and exterior of $\mathcal{C}$ and combining them leads to a near-optimal solution (Theorem 3.1). The problem is further complicated by arbitrary weights on the disks. As a result, several promising approaches (including the quasi-sampling technique of Varadarajan [29]) fail. Fortunately, generalizing the problem to pseudodisks and then using structural properties of pseudodisks melded with randomized ordering and probabilistic re-sampling techniques works out.

Such separator based techniques do not work in three dimensions (even for the independent set problem, one can show that there exists a set of disjoint segments in $\mathbb{R}^3$ so that there is no compactly-represented polyhedral separator). In fact, even for unit balls in $\mathbb{R}^3$ all containing a common point, the set cover problem is APX-hard [5]! However, when the objects are halfspaces in $\mathbb{R}^3$, we prove the existence of a polyhedral separator that allows us to get a QPTAS. This shows that the set-cover problem for halfspaces is the only natural problem in $\mathbb{R}^3$ that is not APX-hard.

Organization. The basic tools and results we will need are stated in Section 2. Section 3 presents the QPTAS for weighted pseudodisks in the plane. At the end of Section 3 we also observe that this then generalizes to the case of weighted r-admissible regions in the plane. A QPTAS for set-cover for the case of weighted halfspaces in $\mathbb{R}^3$ is described in Section 4. Finally, lower-bounds are presented in Section 5.

2 Preliminaries

Let $\mathcal{R} = \{R_1, \ldots, R_n\}$ be a set of weighted, simply connected, α-simple regions in the plane, where a bounded and connected region in the plane is called α-simple if its boundary can be decomposed into at most α x-monotone arcs [2]. For any α-simple region R, we denote by $\Gamma(R)$ a set of at most α x-monotone curves that its boundary can be decomposed into. For a set $\mathcal{R}$ of α-simple regions, we define $\Gamma(\mathcal{R})$ to be

[1] The guessing is actually done by enumerating all possible curves. The fact that $\mathcal{C}$ has a small number of vertices allows efficient enumeration.

[2] Note that whether a region is α-simple depends on choice of axes.

the set $\bigcup_{R\in\mathcal{R}}\Gamma(R)$. Let w_i denote the weight of the region $R_i \in \mathcal{R}$, and $w(\mathcal{S})$ be the total weight of the regions in $\mathcal{S}$ (set $W = w(\mathcal{R})$). The regions in $\mathcal{R}$ need not be disjoint [3]. A collection of compact simply connected regions in the plane is said to form a family of *pseudodisks* if the boundaries of any two of the regions intersect at most twice. The union complexity of a set of pseudodisks in linear [25]. For technical reasons we will assume that pseudodisks in this paper are α-simple for some constant α. This restriction is not crucial, and can be removed [13]. A collection of regions $\mathcal{R}$ is said to be *cover-free* if no region $R \in \mathcal{R}$ is covered by the union of the regions in $\mathcal{R} \setminus R$. For any closed Jordan curve $\mathcal{C}$, we denote the closed region bounded by it as *interior*$(\mathcal{C})$ and the unbounded region defined by it as $exterior(\mathcal{C})$. Given $\mathcal{R}$, we denote by $\mathcal{R}_{in}(\mathcal{C})$ ($\mathcal{R}_{ext}(\mathcal{C})$) the subset of the regions that lie in *interior*$(\mathcal{C})$ (*exterior*$(\mathcal{C})$). Similarly if P is a set of points, we denote by $P_{in}(\mathcal{C})$ ($P_{ext}(\mathcal{C})$) the subset of points lying in *interior*$(\mathcal{C})$ (*exterior*$(\mathcal{C})$).

VC-dimension and ϵ-nets [17]. Given a range space $(X, \mathcal{F})$, a set $X' \subseteq X$ is *shattered* if every subset of X' can be obtained by intersecting X' with a member of the family $\mathcal{F}$. The VC-dimension of $(X, \mathcal{F})$ is the size of the largest set that can be shattered. Given a set system $(X, \mathcal{F})$ where each element of X has a positive weight associated with it, and a paramter $0 < \epsilon < 1$, an ϵ-net is a subset $Y \subseteq X$ s.t. for any $F \in \mathcal{F}$ with weight at least an ϵ fraction of the total weight, $Y \cap F \neq \emptyset$. The ϵ-net theorem (Haussler-Welzl [14], Pach et al. [16], Blumer et al. [**?**][4] states that there exists an ϵ-net of size $O(d/\epsilon \log 1/\epsilon)$ for any range space with VC-dimension d.)

QPT-partitionable problems. Given an optimization problem $\mathcal{O}$, let $\textsc{Opt}_{\mathcal{O}}(I)$ denote the optimal solution of $\mathcal{O}$ on the instance I, and let $w(\textsc{Opt}_{\mathcal{O}}(I))$ be the weight of this optimal solution. We assume $\mathcal{O}$ is a minimization problem; similar statements hold for the maximization case.

Definition 2.1. *A problem $\mathcal{O}$ is* quasi-polynomial time partitionable *(*QPT-partitionable*) if, given any input I and a parameter $\delta > 0$, there exist a constant $c < 1$, $k = O\left(n^{(\log n/\delta)^{O(1)}}\right)$, and instance pairs $(I_l^1, I_r^1), \ldots, (I_l^k, I_r^k)$ (computable in time polynomial in k), and an index j, $1 \leq j \leq k$, such that $i)$ $\max\{w(\textsc{Opt}_{\mathcal{O}}(I_l^j)), w(\textsc{Opt}_{\mathcal{O}}(I_r^j))\} \leq c \cdot w(\textsc{Opt}_{\mathcal{O}}(I))$, $ii)$ $\textsc{Opt}_{\mathcal{O}}(I_l^j) \cup \textsc{Opt}_{\mathcal{O}}(I_r^j)$ is a feasible solution, and $iii)$ $w(\textsc{Opt}_{\mathcal{O}}(I_l^j)) + w(\textsc{Opt}_{\mathcal{O}}(I_r^j)) \leq (1+\delta)w(\textsc{Opt}_{\mathcal{O}}(I))$, $iv)$ Any candidate solution to $\mathcal{O}$ can be checked in polynomial time for feasibility. $v)$ If the optimal solution to $\mathcal{O}$ is of constant size, then we can compute an optimal solution in polynomial time.*

For the problems considered in this paper, conditions $ii)$, $iv)$ and $v)$ above are obvious. We will therefore focus on the other two conditions. The next lemma follows immediately from recursive divide-and-conquer:

Lemma 2.1. *If a problem $\mathcal{O}$ is QPT-partitionable, and if for any instance I, $w(\textsc{Opt}_{\mathcal{O}}(I)) \geq 1$, then one can compute a $(1+\epsilon)$-approximate solution for $\mathcal{O}$ in time $O\left(n^{(\frac{1}{\epsilon}\cdot\log w(\textsc{Opt}_{\mathcal{O}}(I))\cdot\log n)^{O(1)}}\right)$.*

Proof. The algorithm will return an approximate solution $\textsc{Approx}_{\mathcal{O}}(I)$ as follows. Let $T = w(\textsc{Opt}_{\mathcal{O}}(I))$, and set $\delta = \Theta(\epsilon/\log T)$. Construct the k instance pairs $(I_l^1, I_r^1), \ldots, (I_l^k, I_r^k)$, where $k = O\left(n^{(1/\epsilon\cdot\log T\cdot\log n)^{O(1)}}\right)$. For each $i = 1 \ldots k$, compute $\textsc{Approx}_{\mathcal{O}}(I_l^i)$ and $\textsc{Approx}_{\mathcal{O}}(I_r^i)$ recursively and return the solution $\textsc{Approx}_{\mathcal{O}}(I_l^j) \cup \textsc{Approx}_{\mathcal{O}}(I_r^j)$, where $j = \arg\min_i w(\textsc{Approx}_{\mathcal{O}}(I_l^i)) + w(\textsc{Approx}_{\mathcal{O}}(I_r^i))$. We can prune the recursion tree at the level $l = O(\log T)$ since for the right choice of i at each recursion, the weight of the optimal solution falls by a constant factor with every recursive call. The size of the tree is at most $(2k)^l =$

[3] We assume $\mathcal{R}$ to be in general position, so no three regions boundaries intersect at the same point.

[4] Blumer et al. [**?**] improved the original bound of $O(d/\epsilon \log(d/\epsilon))$ proved by Haussler-Welzl[14] to $O(d/\epsilon \log(1/\epsilon))$)

$O\left(n^{(1/\epsilon \cdot \log T \cdot \log n)^{O(1)}}\right)$. It can be shown inductively that the approximation factor of a sub-problem t levels away from the lowest level is $(1+\delta)^t$. Thus the approximation factor at the root is $(1+\delta)^l \leq (1+\epsilon)$, with appropriate constants in the definition of δ. The time taken by the algorithm is $O\left(n^{(1/\epsilon \cdot \log T \cdot \log n)^{O(1)}}\right)$. In this proof, we implicitly used the properties of QPT-partitionable problems as follows: Property $i)$ is used to show that the problem can be reduced to solving polynomially many smaller problems. We used Property $ii)$ and Property $iv)$ to merge solutions to sub-problems, and Property $v)$ to solve the base case of the recursion. The the approximation ratio follows from Property $iii)$. □

Geometric separators. A δ-separator for $\mathcal{R}$, given $\delta > 0$, is a simple closed curve $\mathcal{C}$ in the plane such that the weight of regions of $\mathcal{R}$ completely inside (and outside) $\mathcal{C}$ is at most $2W/3$ (such a curve is called *balanced*), and the total weight of the regions in $\mathcal{R}$ intersecting $\mathcal{C}$ is at most δW. The goal is to show the existence, given $\mathcal{R}$ and $\delta > 0$, of separators of small combinatorial complexity as a function of n, m (number of intersections in $\mathcal{R}$), α and δ. The existence of small δ-separators was the core of the result of [1]; later it was noted independently by Mustafa, et al. (see [20, 21]), Adamaszek and Wiese [2] and Har-Peled [13] that the construction in [1] can be made optimal using the techniques of constructing cuttings and ϵ-nets (i.e, the probabilistic re-sampling technique) [17].

We state two separator results that we will be using in our algorithm.

Theorem 2.2 ([13, 20, 21]). *Given a set $\mathcal{R}$ of n weighted α-simple regions (with total weight W, and no curve having weight more than $W/3$) with disjoint interiors, and a parameter $\delta > 0$, there exists a simple closed curve $\mathcal{C}$ such that $i)$ the total weight of the regions intersecting $\mathcal{C}$ is at most δW, and $ii)$ the total weight of the regions completely inside or outside $\mathcal{C}$ is at most $2W/3$. Furthermore the complexity of $\mathcal{C}$ is $T = O(\alpha/\delta)$. That is $\mathcal{C}$ can be completely described by a sequence of at most T curves of $\Gamma(\mathcal{R})$ and additional at most T bits. Furthermore this is optimal; there exist examples, (in fact, with $\mathcal{R}$ being a set of disjoint line segments) such that any $\mathcal{C}$ satisfying these two properties must have $\Omega(1/\delta)$ bends.*

In the case when the regions have uniform weights (say each region has weight one) but are not necessarily disjoint:

Theorem 2.3 ([20]). *Given a set $\mathcal{R}$ of n α-simple regions in the plane with m intersections, and a parameter r, there exists a simple closed curve $\mathcal{C}$ such that $i)$ the number of regions in $\mathcal{R}$ intersecting $\mathcal{C}$ are $O((m + \frac{\alpha^2 n^2}{r})^{1/2})$, and $ii)$ the total number of regions completely inside or outside $\mathcal{C}$ is at most $2n/3$. Furthermore, complexity of $\mathcal{C}$ is $T = O((r + \frac{mr^2}{\alpha^2 n^2})^{1/2})$. That is, $\mathcal{C}$ can be completely described by a sequence of at most T curves of $\Gamma(\mathcal{R})$ and at most T additional bits.*

The technical condition that the regions are α-simple in the theorems above can be removed [13].

Geometric Set Cover. Let $\mathcal{R} = \{R_1, \ldots, R_n\}$ be a set of weighted regions (in $\mathbb{R}^2$ or $\mathbb{R}^3$) and let P be a finite set of points in the plane. The goal is to compute a subset $\mathcal{Q} \subseteq \mathcal{R}$ minimizing the total weight $w(\mathcal{Q})$ so that $P \subseteq \cup_{Q \in \mathcal{Q}} Q$. We will denote an optimal solution $\mathcal{Q}$ for an instance of the problem given by a set of regions $\mathcal{R}$ and a set of points P by $\textsc{Opt}(\mathcal{R}, P)$, and its weight by $w(\textsc{Opt}(\mathcal{R}, P))$.

Claim 2.4. *If there exists a QPTAS for set-systems $(\mathcal{R}', P')$ where $i)$ each $R \in \mathcal{R}'$ has weight $w(R) \geq 1$, and $ii)$ the weight of the optimal set-cover for $(\mathcal{R}', P')$ is $O(n/\epsilon)$, then there exists a QPTAS for the minimum-weight set cover for a set-system $(\mathcal{R}, P)$ with arbitrary weights.*

Proof. Let $\mathcal{Q}$ be a minimum-weight set-cover for $(\mathcal{R}, P)$. First guess the maximum weight region in $\mathcal{Q}$, say of weight w_{max} (there are n such choices). Then by exponential search on the interval $[w_{max}, nw_{max}]$, one can guess the weight of $\mathcal{Q}$ within a $(1+\epsilon/3)$ factor (there are $O(\log_{1+\epsilon} n)$ such choices). Let w_{aprx} be this weight, satisfying $w(\mathcal{Q}) \leq w_{aprx} \leq (1+\epsilon/3)w(\mathcal{Q})$. Set $\mathcal{R}' \subset \mathcal{R}$ to be the set of regions with weight at least $\epsilon w_{aprx}/3n$, and $\mathcal{R}'' = \mathcal{R} \setminus \mathcal{R}'$. Let $P' \subseteq P$ be the set of points not covered by $\mathcal{R}''$, and construct a $(1+\epsilon/3)$ approximate set-cover $\mathcal{Q}'$ to $(\mathcal{R}', P')$. Return $\mathcal{Q}' \cup \mathcal{R}''$ as a set-cover for $(\mathcal{R}, P)$. Note that this is the required approximation:

$$\begin{aligned} w(\mathcal{Q}' \cup \mathcal{R}'') &= w(\mathcal{Q}') + w(\mathcal{R}'') \\ &\leq (1+\epsilon/3)w(\textsc{Opt}(\mathcal{R}', P')) + \epsilon w_{aprx}/3 \\ &\leq (1+\epsilon/3)w(\mathcal{Q}) + \epsilon/3(1+\epsilon/3)w(\mathcal{Q}) \\ &\leq (1+\epsilon)w(\mathcal{Q}) \end{aligned}$$

Above we use the fact that $\mathcal{Q}$ is also a set-cover for $(\mathcal{R}', P')$. Scaling by $3n/\epsilon w_{aprx}$, each set in $\mathcal{R}'$ has weight at least 1, and weight of $\textsc{Opt}(\mathcal{R}', P') = O(n/\epsilon)$. □

Hence for the purpose of a $(1+\epsilon)$-approximation, we can assume that the minimum weight of any region is 1 and the weight of the optimal set-cover is $O(n/\epsilon)$.

3 QPTAS for Weighted Pseudodisks in $\mathbb{R}^2$

Our main result in this section is:

Theorem 3.1. *Let $\mathcal{R} = \{R_1, \ldots, R_n\}$ be a set of n weighted α-simple pseudodisks with minimum weight 1. Let P be a set of points in the plane, with no point lying on the boundary of any of the pseudodisks. Assume also that no pseudodisk in $\textsc{Opt}(\mathcal{R}, P)$ has weight more than $w(\textsc{Opt}(\mathcal{R}, P))/3$. Then for any $\delta > 0$, there exists a curve $\mathcal{C}$ such that*

- $w(\textsc{Opt}(\mathcal{R}, P_{in}(\mathcal{C}))) \leq (\frac{2}{3} + 3\delta)w(\textsc{Opt}(\mathcal{R}, P))$
- $w(\textsc{Opt}(\mathcal{R}, P_{ext}(\mathcal{C}))) \leq (\frac{2}{3} + 3\delta)w(\textsc{Opt}(\mathcal{R}, P))$
- $w(\textsc{Opt}(\mathcal{R}, P_{in}(\mathcal{C}))) + w(\textsc{Opt}(\mathcal{R}, P_{ext}(\mathcal{C}))) \leq (1+2\delta)w(\textsc{Opt}(\mathcal{R}, P))$
- *The complexity of $\mathcal{C}$ is $O(\frac{\alpha}{\delta^2} \log w(\textsc{Opt}(\mathcal{R}, P))$.*

A QPTAS for weighted pseudodisks follows from this theorem in similar manner to that of Adamaszek and Wiese [1, 2]. We first use Claim 2.4 to reduce the given instance of the set cover problem to an instance $(\mathcal{R}, P)$ where the minimum weight of the regions is 1 and the weight of the optimal solution $w(\textsc{Opt}(\mathcal{R}, P))$ is $O(n/\epsilon)$. Assume also that no pseudodisk in $\textsc{Opt}(\mathcal{R}, P)$ has weight more than $w(\textsc{Opt}(\mathcal{R}, P))/3$. The input instance can be easily perturbed so that no point lies on the boundary of any region. Now by applying Theorem 3.1 with a given δ, there exists a curve $\mathcal{C}$ of complexity $O(1/\delta^2 \log(n/\epsilon))$. Thus by enumeration, there are $O(n^{(1/\delta^2 \cdot \log n/\epsilon)^{O(1)}})$ such possible curves $\mathcal{C}'$ (the proof of Theorem 3.1 shows that the vertices of any such $\mathcal{C}'$ come from a polynomial-sized subset that can be computed in polynomial time) each giving two sub-problems $(\mathcal{R}, P_{in}(\mathcal{C}'))$ and $(\mathcal{R}, P_{ext}(\mathcal{C}'))$. Thus, as ϵ is a constant, the problem is QPT-partitionable, which together with Lemma 2.1 gives the required QPTAS. Finally, note that there can be at most 2 pseudodisks in the optimal solution with weight more than $w(\textsc{Opt}(\mathcal{R}, P))/3$, and one can simply guess (by

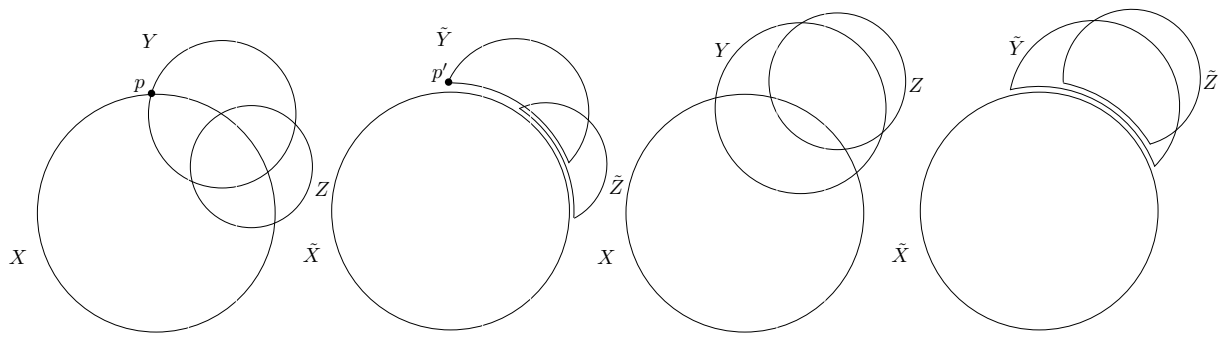

(a) X, Y, Z (b) $\tilde{X}, \tilde{Y}, \tilde{Z}$ (c) X, Y and Z (d) $\tilde{X}, \tilde{Y}, \tilde{Z}$

Figure 1: Pushing pseudodisks

enumerating the at most $O(n^2)$ possibilities) these pseudodisks, and recurse on the sub-problem where the weight of the optimal solution is reduced by a constant factor.

Towards proving the above theorem, we define structural decompositions for pseudodisks in $\mathbb{R}^2$ called *core decompositions*. We will also use this notion for halfspaces in $\mathbb{R}^3$. Informally, given a set of pseudodisks, our goal is to shrink them in such a way that their union remains (almost) unchanged but the number of vertices [5] in the arrangement decreases. Denote by B_τ a closed ball of radius τ. We denote the Minkowski sum by $\oplus$.

Definition 3.2 (**Core Decomposition.**) Given $\mathcal{R} = \{R_1, \ldots, R_n\}$ and a $\beta > 0$, a set of regions $\tilde{\mathcal{R}} = \{\tilde{R}_1, \ldots, \tilde{R}_n\}$ is called a *β-core decomposition* of $\mathcal{R}$ (and each $\tilde{R}_i$ a *core* of R_i) if (1) $\tilde{R}_i \subseteq R_i$ for all $i = 1, \ldots, n$, (2) $\bigcup_i \tilde{R}_i \supseteq \bigcup_i R_i \setminus \bigcup_i (\partial R_i \oplus B_\beta)$, and (3) each $\tilde{R}_i$ is simply connected.

Each disk $\tilde{R}_i \in \tilde{\mathcal{R}}$ will be composed of pieces of boundaries of the disks in $\mathcal{R}$. The sequence of the endpoints of these pieces will be the vertices defining $\tilde{R}_i$ (denote this sequence by $v(\tilde{R}_i)$, and its cardinality by $|v(\tilde{R}_i)|$). The information needed to uniquely determine $\tilde{R}_i$ then is the sequence of these pieces, or equivalently, the sequence of vertices defining $\tilde{R}_i$. In the following, we will use the term *core decomposition* to mean a β-core decomposition with a suitably small $\beta > 0$ to be fixed later. The following two lemmas show the existence of core decompositions with specific properties.

Lemma 3.3. *Given a cover-free set $\mathcal{R}$ of pseudodisks, a marked pseudodisk $X \in \mathcal{R}$ (called the* pusher*) and a $\beta > 0$, there exists a β-core decomposition $\tilde{\mathcal{R}}$ of $\mathcal{R}$ such that $\tilde{X} = X$ and $\tilde{R} \cap \tilde{X} = \emptyset$ for all $R \neq X$ and $\{\tilde{R} : R \in \mathcal{R}\}$ is a cover-free family of pseudodisks.*

Proof. Set $\tilde{X} = X$. For each $R \in \mathcal{R} \setminus \{X\}$, we compute a number $gap(R) \in (0, \mu)$, where $\mu \in (0, \beta)$ is a suitably small number, and set $\tilde{R} = closure(R \setminus (X \oplus B_{gap(R)}))$ (we say that X pushes R with gap $gap(R)$). For any $R \in \mathcal{R} \setminus \{X\}$, let I_R be the interval $R \cap \partial X$ on the boundary of X. As no pseudodisk in $\mathcal{R}$ is completely contained in any other pseudodisk of $\mathcal{R}$ (cover-free), the intervals I_R are well-defined. Consider the partial order $\preceq$ on these intervals defined by inclusion ($I_R \preceq I_S$ if $I_R \subset I_S$). By a topological sorting of this partial order we can assign a distinct rank $rank(R) \in \{1, \ldots, n\}$ to each pseudodisk $R \in \mathcal{R}$ such that if $I_R \subset I_{R'}$ then $rank(R) > rank(R')$. We set $gap(R) = \mu \frac{rank(R)}{n}$.

[5] By vertices we mean the intersection points of the boundaries of the pseudodisks.

Clearly each core is contained in its corresponding pseudodisk and for a small-enough μ, it is simply connected. Also, since the points we may have removed from the union, due to the gaps, lie in $X \oplus B_\mu$, the second condition in the definition of a β-core decomposition is satisfied. The cores obtained are also cover-free because the union of cores cover the union of the original regions (except close to boundaries). Since the input set is cover-free each pseudodisk has a *free* portion that is not covered by others. The core corresponding to a pseudodisk then must cover the free portion in that pseudodisk which is not covered by the other cores. Thus no core is covered by the union of other cores.

It remains to show that the cores form pseudodisks. Let Y and Z be any two pseudodisks in $\mathcal{R}$, and we now finish the proof by showing that the boundaries of $\tilde{Y}$ and $\tilde{Z}$ intersect at most twice. The possible cases are the following: (1) $I_Y \cap I_Z = \emptyset$, (2) $I_Y \preceq I_Z$ and (3) $I_Y \cap I_Z \neq \emptyset$ and $I_Y \not\preceq I_Z$.

In case 1, since the intervals are disjoint, $\partial\tilde{Y}$ and $\partial\tilde{Z}$ do not have any new intersection that ∂Y and ∂Z did not have. They may have lost intersections lying in X. In any case, $\partial\tilde{Y}$ and $\partial\tilde{Z}$ intersect at most twice. In case 2, Y gets pushed with a smaller gap than Z and the situation is exactly as shown in Figures 1c and 1d. In case 3, Y and Z get pushed with different gaps and the situation is exactly as shown in Figures 1a and 1b. □

Remark: Note that for each pseudodisk R intersecting X, the boundary of $\tilde{R}$ now has two new vertices corresponding to the two intersections of ∂R with ∂X. These vertices are slightly perturbed (and arbitrarily close) from the intersections because of the gap. We say that each such new vertex *corresponds* to the original intersection between ∂R and ∂X; e.g., vertex p' in Figure 1b corresponds to the intersection p in Figure 1a. When the context is clear, we will not distinguish between this new vertex and the vertex it corresponds to.

Before we prove our next main result on core decompositions, we will need the following technical result. For clarity, vertex v, the intersection point of R_i and R_j, is written as (v, i, j). Given $\mathcal{R}$, the *depth* of a vertex (v, i, j), denoted d_v, is the total weight of the regions in $\mathcal{R}$ containing (v, i, j) in the interior (thus it excludes the weight of R_i and R_j).

Claim 3.4. *Let $\mathcal{R} = \{R_1, \ldots, R_n\}$ be a set of n weighted pseudodisks, and $k > 0$ a given parameter. Assume a region R_i has weight w_i, and $W = \sum_i w_i$. Then*

$$\sum_{\substack{(v,i,j) \text{ s.t.} \\ k \le d_v < 2k}} \frac{w_i \cdot w_j}{w_i + w_j + k} = O(W)$$

Proof. For the unweighted case, this is easier to derive from the following observation: by the Clarkson-Shor technique, the number of vertices of depth roughly k is $O(nk)$, and each such vertex contributes $O(1/k)$ to the sum above, and thus the result follows.

We present the complete proof for the weighted case now, which follows from melding the Clarkson-Shor technique with a charging argument. Let $\mathcal{R}_1 \subset \mathcal{R}$ be the set of disks with weight $w_i \ge 2k$, and $\mathcal{R}_2 = \mathcal{R} \backslash \mathcal{R}_1$. Note that $|\mathcal{R}_1| = O(W/k)$, and that any vertex v with depth less than $2k$ and defined by two disks in $\mathcal{R}_1$ must lie on the boundary of the union of the regions in $\mathcal{R}_1$. This implies

$$\sum_{\substack{(v,i,j) \text{ s.t.} \\ R_i, R_j \in \mathcal{R}_1 \\ k \le d_v < 2k}} \frac{w_i \cdot w_j}{w_i + w_j + k} \le \sum_{\substack{(v,i,j) \text{ s.t.} \\ R_i, R_j \in \mathcal{R}_1 \\ k \le d_v < 2k}} \min\{w_i, w_j\} = O\left(\sum_{R_i \in \mathcal{R}_1} w_i\right) = O(W) \tag{1}$$

where the first inequality follows from the fact that $w_i + w_j \geq \max\{w_i, w_j\}$. The next inequality follows from a charging argument. Let us call the quantity $\min\{w_i, w_j\}$ the weight of the vertex (v, i, j). Note that the weight of the vertex is at most the weight of either of the pseudodisks defining it. We charge the weight of each vertex to one of the pseudodisks defining it so that each pseudodisk is charged at most a constant number of times. The number of vertices in the union of t pseudodisks is $O(t)$ [25]. This implies that there is a pseudodisk with a constant number of vertices of the union on its boundary. Therefore, repeatedly selecting a pseudodisk R with the fewest number of vertices of the union on its boundary, and charging the weight of these vertices to R ensures that no pseudodisk is charged more than a constant number of times.

Set $S = \mathcal{R}_1$, and further add each disk $R_i \in \mathcal{R}_2$ into S with probability $p_i = w_i/4k$. Then the expected union complexity of S is:

$$E[O(|S|)] = O(|\mathcal{R}_1| + \sum_{R_i \in \mathcal{R}_2} \frac{w_i}{4k}) = O(W/k)$$

On the other hand, the expected number of vertices defined by the intersection of a disk in $\mathcal{R}_2$ and a disk in $\mathcal{R}_1$, and of depth less than $2k$, that end up as vertices in the union of S:

$$\sum_{\substack{(v,i,j) \text{ s.t. } R_i \in \mathcal{R}_2, R_j \in \mathcal{R}_1 \\ k \leq d_v < 2k}} \frac{w_i}{4k} \prod_{\substack{R_l \text{ contains } v \\ R_l \in \mathcal{R}_2}} (1 - p_l) \geq \sum \frac{w_i}{4k} e^{-2\sum_l w_l/4k} \geq \sum \frac{w_i}{4ek}$$

using the fact that $1 - x \geq e^{-2x}$ for $0 \leq x \leq 0.5$, and that $\sum w_l \leq 2k$ as all such R_l contain v, which has depth at most $2k$. The expected number of vertices in the union of S defined by two disks in $\mathcal{R}_2$, and of depth at most $2k$:

$$\sum_{\substack{(v,i,j) \text{ s.t.} \\ R_i \in \mathcal{R}_2, R_j \in \mathcal{R}_2 \\ k \leq d_v < 2k}} \frac{w_i}{4k} \cdot \frac{w_j}{4k} \prod_{\substack{R_l \text{ contains } v \\ R_l \in \mathcal{R}_2}} (1 - p_l) \geq \sum \frac{w_i \cdot w_j}{16ek^2}$$

Putting the lower- and upper-bounds together, we arrive at:

$$\sum_{\substack{(v,i,j) \text{ s.t.} \\ R_i \in \mathcal{R}_2, R_j \in \mathcal{R}_1}} \frac{w_i}{4ek} + \sum_{\substack{(v,i,j) \text{ s.t.} \\ R_i \in \mathcal{R}_2, R_j \in \mathcal{R}_2}} \frac{w_i \cdot w_j}{16ek^2} \leq O(W/k) \tag{2}$$

Finally,

$$\begin{aligned}
\sum_{\substack{(v,i,j) \text{ s.t.} \\ k \leq d_v < 2k}} \frac{w_i \cdot w_j}{w_i + w_j + k} &= \sum_{\substack{(v,i,j) \\ R_i \in \mathcal{R}_2, R_j \in \mathcal{R}_1}} \frac{w_i \cdot w_j}{w_i + w_j + k} + \sum_{\substack{(v,i,j) \\ R_i \in \mathcal{R}_2, R_j \in \mathcal{R}_2}} \frac{w_i \cdot w_j}{w_i + w_j + k} \\
&\quad + \sum_{\substack{(v,i,j) \\ R_i \in \mathcal{R}_1, R_j \in \mathcal{R}_1}} \frac{w_i \cdot w_j}{w_i + w_j + k} \\
&\leq \sum_{\substack{(v,i,j) \\ R_i \in \mathcal{R}_2, R_j \in \mathcal{R}_1}} w_i + \sum_{\substack{(v,i,j) \\ R_i \in \mathcal{R}_2, R_j \in \mathcal{R}_2}} \frac{w_i \cdot w_j}{k} + O(W) = O(W)
\end{aligned}$$

where the last inequality follows from Equation (2).

□

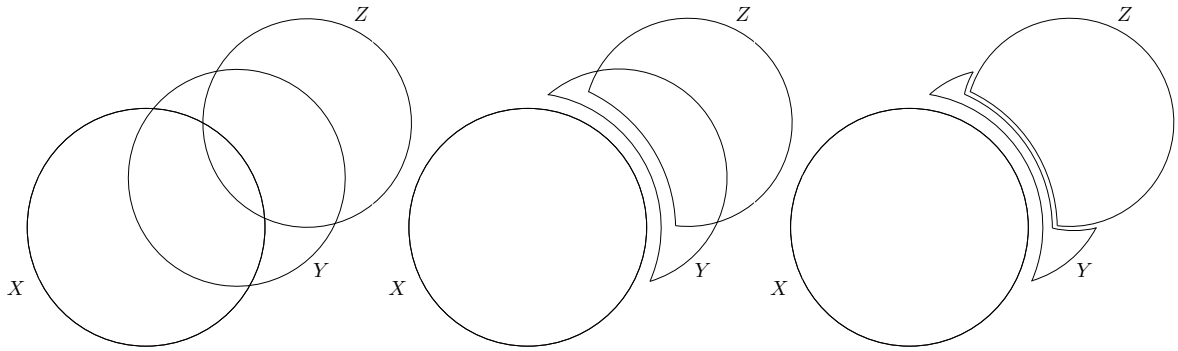

Figure 2: X is the first pusher, Z is the second pusher and Y is the third pusher.

Lemma 3.5. *Let $\mathcal{R} = \{R_1, \ldots, R_n\}$ be a set of n weighted pseudodisks, where R_i has weight w_i, and $W = \sum_i w_i$. Then there exists a core decomposition of $\mathcal{R}$, say the set $\tilde{\mathcal{R}} = \{\tilde{R}_1, \ldots, \tilde{R}_n\}$, such that the pseudodisks in $\tilde{\mathcal{R}}$ are pairwise disjoint, and*

$$\sum_i |v(\tilde{R}_i)| \cdot w_i = O(W \log W)$$

Proof. Recall that $v(\tilde{R}_i)$ is the sequence of vertices defining $\tilde{R}_i$ (which will be composed of pieces of boundaries of regions in $\mathcal{R}$), and determines $\tilde{R}_i$.

The algorithm to construct $\tilde{\mathcal{R}}$ is the following. Construct a permutation, say π, of $\mathcal{R}$ randomly w.r.t. to the weight distribution of the disks as follows. Pick a random disk, where R_i is picked with probability w_i/W. Set this disk to be the first disk in the permutation, and recursively construct the rest of the permutation on the remaining disks. Let π_i denote the position of R_i in this permutation. Let $\mathcal{R}_0 = \mathcal{R}$. Apply Lemma 3.3 (with $R_{\pi^{-1}(1)} \in \mathcal{R}_0$ as the pusher) to get a core decomposition, denoted by $\mathcal{R}_1$, of $\mathcal{R}_0$. Now apply Lemma 3.3 on $\mathcal{R}_1$ (with $\tilde{R}_{\pi^{-1}(2)} \in \mathcal{R}_1$ as the pusher) to get the set $\mathcal{R}_2$. Continuing iteratively by applying Lemma 3.3 with the successive core of each $R_{\pi^{-1}(i)}$ in $\mathcal{R}_i$ as the pusher, we get the set $\tilde{\mathcal{R}} = \mathcal{R}_n$. See Figure 2 for an example.

We have the following crucial fact:

Claim 3.6. *$v(\tilde{R}_l)$ has a vertex corresponding to (v, i, j), if and only if $(v, i, j) \in R_l$, and*

$$\begin{cases} \max\{\pi_i, \pi_j\} < \min_{R_m \ni v} \pi_m & \text{if } l \neq i, j \\ \pi_j < \pi_i & \text{if } l = i \\ \pi_i < \pi_j & \text{if } l = j \end{cases}$$

Proof. First consider the case when $l \neq i, j$. The proof relies on the observation that by the proof of Lemma 3.3, if v is a vertex in the arrangement of $\mathcal{R}$, and at any point a region containing v in its interior is used as a pusher, then any $\tilde{R} \in \tilde{\mathcal{R}}$ cannot have a vertex that corresponds to v. Thus the only way a vertex corresponding to (v, i, j) can be part of the boundary of any $\tilde{R}$ is if both the regions R_i and R_j occur earlier in π than any of the regions containing v. For the case when $l = i$ (same for when $l = j$), the proof follows from the fact that if at any point there are two regions X and Y and X is used as a pusher before Y, then the core of X cannot have a vertex that corresponds to a vertex defined by X and Y (see Figure 2). □

Then

$$\sum_i |v(\tilde{R}_i)| \cdot w_i = \sum_{(v,i,j)} \sum_{l \text{ s.t. } v \in v(\tilde{R}_l)} w_l = \sum_{(v,i,j)} \sum_{l \text{ s.t. } v \in R_l} X_{(v,i,j,l)} \cdot w_l$$

where the indicator variable $X_{(v,i,j,l)} = 1$ iff $v \in v(\tilde{R}_l)$ (more precisely, the vertex corresponding to v is in $v(\tilde{R}_l)$). Using the above Claim and Claim 3.4, we calculate the expected value of the required bound:

$$\begin{aligned}
&\sum_i E\big[|v(\tilde{R}_i)|\big] \cdot w_i = \sum_{(v,i,j)} \sum_{l \text{ s.t. } v \in R_l} E\big[X_{(v,i,j,l)}\big] \cdot w_l = \sum_{(v,i,j)} \sum_{l \text{ s.t. } v \in R_l} \Pr\big[v \in v(\tilde{R}_l)\big] \cdot w_l \\
= &\sum_{(v,i,j)} \Big(\Pr[v \in v(\tilde{R}_i)]w_i + \Pr[v \in v(\tilde{R}_j)]w_j + \sum_{\substack{i,j \neq l \\ v \in R_l}} \Pr[v \in v(\tilde{R}_l)]w_l\Big) \\
= &\sum_{(v,i,j)} \Big(\frac{w_j}{w_i + w_j + d_v}\frac{w_i}{w_i + d_v}w_i + \frac{w_i}{w_i + w_j + d_v}\frac{w_j}{w_j + d_v}w_j + \sum_{\substack{i,j \neq l \\ v \in R_l}} (\frac{w_j}{w_i + w_j + d_v}\frac{w_i}{w_i + d_v} \\
&\quad + \frac{w_i}{w_i + w_j + d_v}\frac{w_j}{w_j + d_v})w_l\Big) \\
= &\sum_{(v,i,j)} \Big((\frac{w_j}{w_i + w_j + d_v}\frac{w_i}{w_i + d_v}) \cdot (w_i + \sum_{R_l \ni v} w_l) + (\frac{w_i}{w_i + w_j + d_v}\frac{w_j}{w_j + d_v}) \cdot (w_j + \sum_{R_l \ni v} w_l)\Big) \\
= &\ 2\sum_{(v,i,j)} \frac{w_i \cdot w_j}{w_i + w_j + d_v} = 2\sum_k \sum_{\substack{(v,i,j) \\ 2^k \le d_v < 2^{k+1}}} \frac{w_i \cdot w_j}{w_i + w_j + d_v} = O(W \log W).
\end{aligned}$$

where the last inequality follows from Claim 3.4. □

We can now finish the proof of Theorem 3.1.

Proof of Theorem 3.1. We use Lemma 3.5 to obtain a core $\tilde{Q}$ for each $Q \in \mathcal{Q} = \textsc{Opt}(\mathcal{R}, P)$ and we assign to $\tilde{Q}$ the same weight as Q. Since the regions in $\mathcal{Q}$ cover P their cores also cover P. [6] As before, we denote the number of vertices in $\tilde{Q}$ by $|v(\tilde{Q})|$. By Lemma 3.5, $\sum_{Q \in \mathcal{Q}} |v(\tilde{Q})| w(Q) = O(w(\mathcal{Q}) \log w(\mathcal{Q})))$. We set $\tau = C \cdot \frac{1}{\delta} \log w(\mathcal{Q})$ for some large enough constant C. Then by averaging, $\sum_{Q \in \mathcal{Q}: |v(\tilde{Q})| > \tau} w(Q) < \delta w(\mathcal{Q})$. Let $\mathcal{Q}_s = \{Q \in \mathcal{Q} : |v(\tilde{Q})| \le \tau\}$ and let $\tilde{\mathcal{Q}}_s = \{\tilde{Q} : Q \in \mathcal{Q}_s\}$. The regions in $\tilde{\mathcal{Q}}_s$ are $\alpha\tau$-simple since they have at most τ sides and each of the sides is a portion of the boundary of a single α-simple region in $\mathcal{R}$. These regions have a total weight of $w(\mathcal{Q}_s)$. Thus applying Theorem 2.2, we get separator $\mathcal{C}$ so that the total weight of the regions of $\mathcal{Q}_s$ whose cores lie in *interior*($\mathcal{C}$) (*exterior*($\mathcal{C}$)) is at most $\frac{2}{3}w(\mathcal{Q}_s)$. Since the total weight of the regions in $\mathcal{Q} \setminus \mathcal{Q}_s$ is at most $\delta w(\mathcal{Q})$, the total weight of all the cores that lie in *interior*($\mathcal{C}$) (*exterior*($\mathcal{C}$)) is at most $(\frac{2}{3} + \delta)w(\mathcal{Q})$. Also, the total weight of the cores in $\mathcal{Q}_s$ that intersect $\mathcal{C}$ is at most $\delta w(\mathcal{Q}_s)$. Thus the total weight of all the cores in $\mathcal{Q}$ that intersect $\mathcal{C}$ is at most $2\delta w(\mathcal{Q})$. The complexity of $\mathcal{C}$ is $O(\alpha\tau/\delta) = O(\frac{\alpha}{\delta^2} \log w(\mathcal{Q}))$, satisfying the fourth item in the statement of the theorem.

Let $\mathcal{Q}_1$ ($\mathcal{Q}_2$) be the set of regions whose cores are in *interior*($\mathcal{C}$) (*exterior*($\mathcal{C}$)). Let $\mathcal{Q}_3 = \mathcal{Q} \setminus \{\mathcal{Q}_1 \cup \mathcal{Q}_2\}$. Observe that the cores of the regions in $\mathcal{Q}_1 \cup \mathcal{Q}_3$ cover all the points in $P_{in}(\mathcal{C})$ and therefore the regions

[6] Since no point lies on the boundary of any of the regions, there is a suitable choice of β so that using β-core decompositions, we do not miss any of the points.

in $\mathcal{Q}_1 \cup \mathcal{Q}_3$ themselves cover the points in $P_{in}(\mathcal{C})$. Similarly the regions in $Q_2 \cup \mathcal{Q}_3$ cover the points in $P_{ext}(\mathcal{C})$. Therefore,

$$w(\textsc{Opt}(\mathcal{R}, P_{in})) \leq w(\mathcal{Q}_1 \cup \mathcal{Q}_3) = \quad w(\mathcal{Q}_1) + w(\mathcal{Q}_3) \leq (\frac{2}{3} + 3\delta)w(\mathcal{Q})$$

This proves the first item in the statement of the theorem. The second item is proved analogously. For the third item, we combine the inequalities $w(\textsc{Opt}(\mathcal{R}, P_{in})) \leq w(\mathcal{Q}_1) + w(\mathcal{Q}_3)$ and $w(\textsc{Opt}(\mathcal{R}, P_{ext})) \leq w(\mathcal{Q}_2) + w(\mathcal{Q}_3)$. We get

$$w(\textsc{Opt}(\mathcal{R}, P_{in})) + w(\textsc{Opt}(\mathcal{R}, P_{ext})) \leq w(\mathcal{Q}_1) + w(\mathcal{Q}_2) + 2w(\mathcal{Q}_3) \leq w(\mathcal{Q}) + w(\mathcal{Q}_3) \leq (1 + 2\delta)w(\mathcal{Q})$$

That proves the third item.

□

3.1 QPTAS for Unweighted Pseudodisks in $\mathbb{R}^2$

For the uniform pseudodisk case, there is an easier proof, which we present now.

Lemma 3.7. *Given a set of pseudodisks $\mathcal{R} = \{R_1, \ldots, R_n\}$ and a parameter $\eta > 0$, there exists a core decomposition of $\mathcal{R}$, say the set $\tilde{\mathcal{R}} = \{\tilde{R}_1, \ldots, \tilde{R}_n\}$, such that*

1. *the number of intersections in the arrangement induced by $\tilde{\mathcal{R}}$ is $O(1/\eta^2 + \eta n^2)$, and*
2. *the number of vertices of each pseudodisk in $\tilde{\mathcal{R}}$ is $O(1/\eta^2)$.*

Proof. Construct an η-net, say the set $\mathcal{Q} = \{Q_0, \ldots, Q_t\}$, for the set system $(\mathcal{R}, \{\{R \in \mathcal{R} \mid p \in R\} \mid p \in \mathbb{R}^2\})$. By the result of Clarkson and Varadarajan [8], $\mathcal{Q}$ has size $O(1/\eta)$.

Let $\mathcal{R}_0 = \mathcal{R}$. Apply Lemma 3.3 (with $\tilde{Q}_0 = Q_0 \in \mathcal{R}_0$ as the pusher) to get a core decomposition, denoted by $\mathcal{R}_1$, of $\mathcal{R}_0$. Now apply Lemma 3.3 on $\mathcal{R}_1$ (with $\tilde{Q}_1 \in \mathcal{R}_1$ as the pusher) to get the set $\mathcal{R}_2$. Continuing iteratively by applying Lemma 3.3 with the successive core of each Q_i in $\mathcal{R}_i$ as the pusher, we get the set $\mathcal{R}_t$. We finally modify $\mathcal{R}_t$ to obtain the final set of cores, $\tilde{\mathcal{R}}$. We do this by replacing each core $\tilde{Q}$ of a pseduodisk $Q \in \mathcal{Q}$ in $\mathcal{R}_t$ by the original pseudodisk Q, and leave the cores of the rest of the pseudodisks unchanged as in $\mathcal{R}_t$.

Observe that each $\tilde{R} \in \tilde{\mathcal{R}} \setminus Q$ is disjoint from each object in Q (it became disjoint from Q_i latest at the i-th iteration). As Q was an η-net, any point in the plane not covered by the union of Q has depth at most ηn. Recall that by the Clarkson-Shor technique, as pseudodisks have linear union complexity, the maximum number of vertices at depth at most k is $O(nk)$. Therefore the total number of intersections in $\tilde{\mathcal{R}}$ is

$$O(|Q|^2 + |\mathcal{R}_t| \cdot \eta n) = O(1/\eta^2 + n \cdot \eta n)$$

This proves condition 1.

For condition 2., from the proof of Lemma 3.3, each boundary vertex of any core object corresponds to a vertex of the arrangement induced by the objects in Q. As every pair of pseudodisks can intersect at most twice, there are $O(1/\eta^2)$ vertices in the arrangement of Q. □

We now give a proof of the existence of the separator for uniformly weighted pseudodisks.

Lemma 3.8. *Given a set of $\mathcal{R}$ of n uniformly weighted α-simple pseudodisks (each with weight 1) and set P of points in the plane, no point lying on the boundary of any of the regions, and any parameter δ, there exists a curve $\mathcal{C}$ such that*

- $w(\textsc{Opt}(\mathcal{R}, P_{in}(\mathcal{C}))) \leq (\frac{2}{3} + \delta) w(\textsc{Opt}(\mathcal{R}, P))$
- $w(\textsc{Opt}(\mathcal{R}, P_{ext}(\mathcal{C}))) \leq (\frac{2}{3} + \delta) w(\textsc{Opt}(\mathcal{R}, P))$
- $w(\textsc{Opt}(\mathcal{R}, P_{in}(\mathcal{C}))) + w(\textsc{Opt}(\mathcal{R}, P_{ext}(\mathcal{C}))) \leq (1 + \delta) w(\textsc{Opt}(\mathcal{R}, P))$
- *the complexity of $\mathcal{C}$ is $O(\log^5 n/\delta^5)$*

where $w(\mathcal{S})$ denotes the total weight of the regions in $\mathcal{S}$.

Proof. Consider the set $\mathcal{Q} = \textsc{Opt}(\mathcal{R}, P)$. We apply Lemma 3.7 with $\eta = \delta^2/\log^2 n$ to $\mathcal{Q}$ and get a core decomposition with a core $\tilde{Q}$ for each $Q \in \mathcal{Q}$. Since, the regions in $\mathcal{Q}$ cover P, their cores also cover P[7]. By the property of the core decomposition of Lemma 3.7, we have the total number of intersections to be $m = O(\delta^2 n^2/\log^2 n)$, and each core has $O(\log^4 n/\delta^4)$ vertices. Since each of the curves forming the boundary of any core is composed of at most α x-monotone curves, the cores are α_1-simple for $\alpha_1 = O(\alpha \log^4 n/\delta^4)$. Applying Theorem 2.3 to these cores with parameter $r = \alpha^2 \log^{10} n/\delta^{10}$, we get a curve $\mathcal{C}$, where

$$\begin{aligned}
\text{Number of cores intersected by } \mathcal{C} &= O\left(\sqrt{m + \alpha_1^2 n^2/r}\right) = O\left(\sqrt{\frac{\delta^2 n^2}{\log^2 n}}\right) = O\left(\frac{\delta n}{\log n}\right) \\
\text{Complexity of } \mathcal{C} &= O\left(\sqrt{r + \frac{mr^2}{\alpha_1^2 n^2}}\right) = O\left(\sqrt{\frac{\log^{10} n}{\delta^{10}}}\right) = O\left(\frac{\alpha \log^5 n}{\delta^5}\right)
\end{aligned}$$

Let $\mathcal{Q}_1$ ($\mathcal{Q}_2$) be the set of regions whose cores are in *interior*($\mathcal{C}$) (*exterior*($\mathcal{C}$)). Let $\mathcal{Q}_3 = \mathcal{Q} \setminus \{\mathcal{Q}_1 \cup \mathcal{Q}_2\}$. Observe that the cores of the regions in $\mathcal{Q}_1 \cup \mathcal{Q}_3$ cover all the points in P_{in} and therefore the regions in $\mathcal{Q}_1 \cup \mathcal{Q}_3$ themselves cover the points in P_{in}. Similarly the regions in $Q_2 \cup \mathcal{Q}_3$ cover the points in P_{ext}. Theorem 2.3 guarantees that $w(\mathcal{Q}_1)$ and $w(\mathcal{Q}_2)$ are at most $\frac{2}{3} w(\mathcal{Q})$ and $w(\mathcal{Q}_3) = O\left(\frac{\delta n}{\log n}\right) \leq \delta w(\mathcal{Q})$. Therefore,

$$w(\textsc{Opt}(\mathcal{R}, P_{in})) \leq w(\mathcal{Q}_1 \cup \mathcal{Q}_3) = w(\mathcal{Q}_1) + w(\mathcal{Q}_3) \leq \left(\frac{2}{3} + \delta\right) w(\mathcal{Q})$$

This proves the first item in the statement of the theorem. The second item is proved analogously. For the third item, we combine the inequalities $w(\textsc{Opt}(\mathcal{R}, P_{in})) \leq w(\mathcal{Q}_1) + w(\mathcal{Q}_3)$ and $w(\textsc{Opt}(\mathcal{R}, P_{ext})) \leq w(\mathcal{Q}_2) + w(\mathcal{Q}_3)$. We get

$$w(\textsc{Opt}(\mathcal{R}, P_{in})) + w(\textsc{Opt}(\mathcal{R}, P_{ext})) \leq w(\mathcal{Q}_1) + w(\mathcal{Q}_2) + 2w(\mathcal{Q}_3) \leq w(\mathcal{Q}) + w(\mathcal{Q}_3) \leq (1 + \delta) w(\mathcal{Q})$$

That proves the third item. Lemma 3.7 also gives a set $\Gamma(\tilde{Q})$ for each $Q \in \mathcal{Q}$. Let $Y = \cup_{Q \in \mathcal{Q}} \Gamma(\tilde{Q})$. The separator $\mathcal{C}$ given by Theorem 2.3 can be described by a sequence of $O(\alpha \log^5 n/\delta^5)$ curves in Y and $O(\alpha \log^5 n/\delta^5)$ additional bits. Since, by Lemma 3.7 each curve in Y can be described by a sequence of at most three curves in $\Gamma(\mathcal{R})$ and a constant number of bits, $\mathcal{C}$ can also be described by a sequence of $O(\alpha \log^5 n/\delta^5)$ curves in $\Gamma(\mathcal{R})$ and $O(\alpha \log^5 n/\delta^5)$ additional bits of information. □

Now the existence of $\mathcal{C}$ immediately implies that the problem is QPT-partitionable, which together with Lemma 2.1 yields a QPTAS for the case with uniform weights.

[7] Since no point lies on the boundary of any of the regions, there is suitable choice of β so that using β-core decompositions, we do not miss any of the points.

QPTAS for the Set Cover problem with Weighted r-Admissible Regions in $\mathbb{R}^2$. The QPTAS for pseudodisks can be extended to work for more general regions called r-admissible regions, for constant r. Two regions A and B are said to be non-piercing if they are simply connected, their boundaries intersect at most a finite number of times, and properly cross at these intersections (i.e., there are no tangencies) and the regions $A \setminus B$ and $B \setminus A$ are connected. A finite set of regions is said to be non-piercing if they are pairwise non-piercing. Figure 4 shows three regions that form a non-piercing set. A family of regions is called r-admissible if the boundaries of any pair of regions intersect at most r times. It is known that a family of r-admissible regions have a linear union complexity when r is a constant (see [**?**]).

The QPTAS for r-admissible regions is obtained in the same way as for pseudodisks. The only thing we need to do is extend Lemma 3.3 to work for these regions. In doing this extension, we will just assume that r is finite, i.e., we just assume that the regions are non-piercing.

When we have a family of non-piercing regions, a region R may intersect the boundary of pusher X in more than one interval. To ensure that after pushing the new regions are still non-piercing, different gaps are required in different intervals for the same region R. This makes it technically more complicated, which we present now.

Lemma 3.9. *Given a set $\mathcal{R}$ of non-piercing regions, and a marked region $X \in \mathcal{R}$ (called the* pusher*), there exists a core decomposition $\tilde{\mathcal{R}}$ of $\mathcal{R}$ such that i) $\tilde{X} = X$ and $\tilde{R} \cap \tilde{X} = \emptyset$ for all $R \in \mathcal{R} \setminus \{X\}$ and ii) $\tilde{\mathcal{R}}$ forms a family of non-piercing regions.*

Proof. First, if one of the regions R is contained in the union of the other regions, then we can set $\tilde{R} = \emptyset$ and recurse for the remaining regions. In the following, we will therefore assume that none of the regions is contained in the union of the others. The idea for the proof is the same as with pseudodisks. We set $\tilde{X} = X$ and $X' = X \oplus B_\mu$ for a suitably small μ. For sufficiently small μ, X' forms a non-piercing family with the regions in $\mathcal{R} \setminus \{X\}$.

The intersection of each region in $\mathcal{R} \setminus \{X\}$ with ∂X forms a set of intervals on the boundary of X. Let $\mathcal{I}$ be the set of all these intervals corresponding to all the regions. We then consider the partial order among them defined by inclusion, as in the case of pseudodisks. This time, instead of assigning ranks to the pseudodisks, we assign distinct ranks in the range 1 to m to the intervals, where m is the total number of intervals in $\mathcal{I}$. Different intervals corresponding to the same region are given different ranks by this procedure.

Unlike with pseudodisks, we do not push a region R with the single gap. Instead we push it with different gaps along the different intervals in which it intersects ∂X. The gap along an interval I is $gap(I) = \mu \frac{rank(I)}{m}$.

Figures 3 (a) and 3 (b) show the effect of pushing the region A along the interval $I = [a, b]$ which is one of two intervals on ∂X in which A intersects ∂X. The part of ∂A inside X joining a and b is replaced by the dashed curve shown in Figure 3 (c) that lies on the boundary of $X \oplus B_{gap(I)}$. As another example, Figures 4 and 5 show the effect of pushing two regions A and B with a third one X.

For any of the regions C, denote by C' the region obtained by modifying C by the above procedure. Note that any such region C' is simply connected since X is not contained in C and C' is almost $C \setminus X$ with slight changes along the boundary due to the gaps.

We now show that any pair of regions A' and B' created by the above procedure are non-piercing by showing that $A' \setminus B'$ is connected. A symmetric argument shows that $B' \setminus A'$ is connected.

The boundary of A' consists of a set of arcs $\mathcal{I}_A$ along ∂X, produced by the pushing procedure. Each such arc corresponds to an interval in $A \cap \partial X$. Let I be such an arc. Then, observe that $I \setminus B'$ is connected since our procedure ensures that if one of the connected components of $B \cap I$ is a proper sub-interval $J \subset I$ then

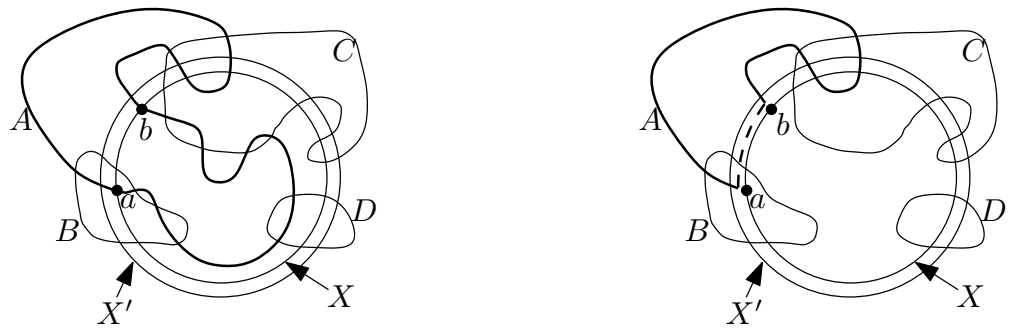

(a) (b)

Figure 3: (a) before X pushes A, (b) after X pushes A.

the boundary of B is pushed along J with a large gap than than was used for I.

Consider any two points $x, y \in A' \setminus B'$. We claim that x and y are connected by a path contained in $A' \setminus B'$. Since $A \setminus B$ is connected, there is a path in $A \setminus B$ between x and y. Since $B' \subseteq B$, such a path lies in $A \setminus B'$. Consider such an x-y path P in $A \setminus B'$ with the fewest intersections with the intervals in $\mathcal{I}_A$. We claim that P does not have any intersections with the intervals in $\mathcal{I}_A$ and thus lies in $A' \setminus B'$. We do this by showing that if P does intersect an interval in $\mathcal{I}_A$ then we can decrease the number of intersections. Any connected component σ of $P \setminus A'$ lies in the connected component of $A \cap (X \oplus B_{gap(I)})$ bounded by I, for some I. The end-points a and b of σ lie on I. We can replace the portion σ of P by a path that goes from a to b along I and move it by an arbitrarily small amount so that it lies in the interior of $A' \setminus B'$ eliminating the intersection points a and b. This altered portion of P lies in $A' \setminus B'$ since $I \setminus B'$ is connected and $a, b \in I$.

□

Remark: Note that, as in the case of pseudodisks, for each $R \in \mathcal{R}$, the boundary of $\tilde{R}$ gains as many vertices as the number of intersections between ∂X and ∂R. As before, these vertices correspond to the intersections but are slightly perturbed from the intersections because of the pushing with non-zero gaps.

A QPTAS for the set cover problem with weighted r-admissible regions with constant r now follows as in Section 3 for pseudodisks, using the fact that r-admissible regions have linear union complexity [**?**].

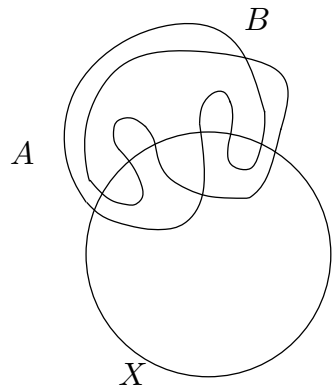

Figure 4: Before X pushes A and B

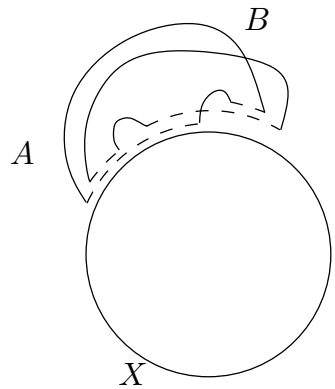

Figure 5: After X pushes A and B

4 QPTAS for Weighted Halfspaces in $\mathbb{R}^3$

Let $\mathcal{H} = \{H_1, \cdots, H_n\}$ be a set of halfspaces in $\mathbb{R}^3$ where the halfspace H_i has weight $w_i \geq 0$. Let P be a set of points in $\mathbb{R}^3$. Given $\mathcal{H}$ and P, we show that the problem of computing a subset of $\mathcal{H}$ of minimum weight whose union covers P is QPT-partitionable (with an additional guessing of a small subset of the optimal solution), and then Lemma 2.1 implies the QPTAS.

Consider the optimal solution $\textsc{Opt} = \textsc{Opt}(\mathcal{H}, P)$ for the problem, and let W be the total weight of the halfspaces in $\textsc{Opt}$. For any halfspace H, define $\overline{H}$ to be other halfspace defined by its boundary ∂H i.e., $\overline{H} = closure(\mathbb{R}^3 \setminus H)$. For any set of halfspaces $\mathcal{S}$, define $\overline{\mathcal{S}} = \{\overline{H} : H \in \mathcal{S}\}$.

Lemma 4.1. *If $\bigcup_{H \in \textsc{Opt}} H = \mathbb{R}^3$, then one can compute $\textsc{Opt}(\mathcal{H}, P)$ in polynomial time.*

Proof. If $\bigcup_{H \in \textsc{Opt}} H = \mathbb{R}^3$, then by definition $\bigcap_{H \in \textsc{Opt}} \overline{H} = \emptyset$. By Helly's theorem [17] applied to the set of convex regions in $\overline{\textsc{Opt}}$, it follows that then there must be a subset $\textsc{Opt}' \subset \textsc{Opt}$ of at most 4 halfspaces such that $\bigcap_{H \in \textsc{Opt}'} \overline{H} = \emptyset$. In other words, $\textsc{Opt}'$ covers $\mathbb{R}^3$. As $\textsc{Opt}$ was a minimal-weight set cover, it follows that $|\textsc{Opt}| \leq 4$. By enumerating all 4-tuples of halfspaces in $\mathcal{H}$, one can compute the optimal set-cover in polynomial time. □

From now on we assume that there is a point o that does not lie in any of the halfspaces in $\textsc{Opt}$ (say the origin). We will also assume without loss of generality that the intersection of halfspaces in $\overline{\textsc{Opt}}$ is a bounded polytope. This can be easily done by adding to the input four halfspaces with weight 0 which do not contain any of the points in P whose complements intersect in a bounded simplex. These four dummy halfspaces can then be included in any optimal solution without affecting the weight of the solution. Note also that each halfspace $H \in \textsc{Opt}$ must be part of some facet (in fact, a unique facet) of this polytope; otherwise H is contained in the union of $\textsc{Opt} \setminus \{H\}$, contradicting the set-cover minimiality of $\textsc{Opt}$.

We now define a core decomposition for the halfspaces in $\textsc{Opt}$ that allows a cheap balanced polyhedral separator.

Consider the set system in which the base set are the halfspaces in $\textsc{Opt}$ and subsets are defined by taking any segment ox with one end-point at o and taking the set of halfspaces whose boundaries intersect the segment. More formally, for any $x \in \mathbb{R}^3$, let $R_x = \{H \in \textsc{Opt} : \partial H \cap ox \neq \emptyset\}$. We now define $\mathcal{R}$ as the

set $\{R_x : x \in \mathbb{R}^3\}$. Consider the weighted set system $(\mathcal{H}, \mathcal{R})$, where the weight of $w(R)$ of any $R \in \mathcal{R}$ is the sum of the weights of the halfspaces in R.

Lemma 4.2. *The VC-dimension of* $(\mathcal{H}, \mathcal{R})$ *is at most* 3.

Proof. For two distinct points x and y that lie in the same cell of the arrangement of the halfspaces in OPT, $R_x = R_y$. So for any subset of OPT of size k, the number of induced subsets is at most the number of cells in an arrangement of these k halfspaces, which is at most $\binom{k}{3} + \binom{k}{2} + \binom{k}{1} + \binom{k}{0}$. For $k = 4$, this number is less than 2^k, implying that no subset of size 4 is shattered. Thus the VC-dimension this set system is at most 3. □

Thus, by the ϵ-net theorem [14], there is an ϵ-net for this set system of size $O(\frac{1}{\epsilon} \log \frac{1}{\epsilon})$. Let N be an ϵ-net for this set system for a value of ϵ to be fixed later. As before, we will assume that the intersection of halfspaces in $\overline{N}$ is a bounded polytope $\mathcal{P}$. This can be ensured by including in N the dummy halfspaces.

For any set $S \subset \mathbb{R}^3$, define $cone(S)$ to be the set $\{\lambda x : x \in S, \lambda \geq 0\}$. Note that each halfspace in N (with the exception of dummy halfspaces) has a unique facet of $\mathcal{P}$ corresponding to it. For any halfspace $H \in \text{OPT} \setminus N$, we defined the core as $\tilde{H} = \mathcal{P} \cap H$. The core of each halfspace is clearly contained in the halfspace and the union of these cores together with the union of the halfspaces in N is clearly the same as the union of the halfspaces in OPT.

We can ensure that each facet of $\mathcal{P}$ is a triangle by adding additional edges to the 1-skeleton of $\mathcal{P}$. We now assign a weight to each of these triangular facets of $\mathcal{P}$ by distributing the weights of the halfspaces in $\text{OPT} \setminus N$ to the facets: for a halfspace in $H \in \text{OPT} \setminus N$, we distribute its weight equally among all facets f s.t. $cone(f)$ intersects the core $\tilde{H}$ of H.

The 1-skeleton of $\mathcal{P}$ is a triangulated planar graph G and we have assigned weights to its faces. Let n' denote the number of vertices in this graph; note that $n' = O(|N|) = O(\frac{1}{\epsilon} \log \frac{1}{\epsilon})$. By [19], there exists in this graph a cycle separator $\mathcal{C}$ of size $O(\sqrt{n'})$ so that the total weight of the faces in the interior (exterior) of $\mathcal{C}$ is at most two thirds of the total weight. We show that $\hat{\mathcal{C}} = cone(\mathcal{C})$ is the desired cheap balanced separator for the cores we have defined. $\hat{\mathcal{C}}$ splits $\mathbb{R}^3$ into two connected pieces whose closures we call the interior and the exterior of $\hat{\mathcal{C}}$. The choice is arbitrary. Note that *interior*$(\hat{\mathcal{C}}) \cap$ *exterior*$(\hat{\mathcal{C}}) = \hat{\mathcal{C}}$.

First note that for each core that lies in the interior (exterior), the weight of the corresponding halfspaces is distributed only among the faces of $\mathcal{P}$ lying in the interior (exterior) of $\hat{\mathcal{C}}$. Hence the total weight of all cores that lie in the interior (exterior) of $\hat{\mathcal{C}}$ is at most two thirds of the total weight of all halfspaces in $\text{OPT} \setminus N$.

We now need to bound the total weight of the cores that cross $\hat{\mathcal{C}}$. Consider a halfspace $H \in \text{OPT} \setminus N$. Its core is defined as $H \cap \mathcal{P}$. If this core intersects $\hat{\mathcal{C}}$, then $H \cap \partial\mathcal{P}$ intersects $\mathcal{C}$. It follows that H intersects an edge of $\mathcal{C}$ and thus must contain a vertex v of $\mathcal{C}$. In other words, ∂H intersects the segment ov. However, since N is an ϵ-net, for any vertex v, the total weight of halfspaces whose boundaries intersects ov is at most ϵW. Since $\mathcal{C}$ has $O(\sqrt{n'})$ vertices, the total weight of all cores crossing $\hat{\mathcal{C}}$ is $O(\sqrt{n'} \cdot \epsilon W)$. We set $\epsilon = A\delta^2/\log^2(1/\delta)$ for a suitable constant A so that $\mathcal{C}$ has $O(\frac{1}{\delta} \log \frac{1}{\delta})$ vertices and the total weight of cores intersecting is at most δW.

Observe that the complexity of $\hat{\mathcal{C}}$ is determined by the complexity of $\mathcal{C}$, and the point o. The vertices of $\mathcal{C}$ are determined by intersections of 3 halfspaces of $\mathcal{H}$, and so there are $O(n^3)$ choices for each vertex of $\mathcal{C}$. To guess the point o, it suffices to guess the cell of the arrangement of $\mathcal{H}$ in which it lies (there are $O(n^3)$ such choices), and pick any point in that cell.

Finally, note that $|N| = O(\log^2(1/\delta)/\delta^2)$. Therefore the algorithm proceeds as follows: first guess N (there are $n^{O(\log^2(1/\delta)/\delta^2)}$ such choices), and then guess the separator as constructed above (there are $n^{O(\log(1/\delta)/\delta)}$

such choices). As before, recursively solve two sub-problems, i.e., the halfspaces $\mathcal{H}$ with the set of points in P not covered by any halfspace in N and lying in *interior*$(\hat{\mathcal{C}})$, and the halfspaces $\mathcal{H}$ with the set of points in P not covered by any halfspace in N and lying in *exterior*$(\hat{\mathcal{C}})$. Return the union of these two solutions together with N.

Remark: It may appear that the set cover problem for halfspaces may be reduced to the problem for pseudodisks using techniques used in [18]. Unfortunately, that does not work because (i) we are in the weighted setting and (ii) because we cannot tolerate the loss of a constant factor when looking for a $(1+\epsilon)$-approximation algorithm. It is also tempting to think that the technique used for halfspaces may be used for pseudodisks in the plane. That would mean taking an ϵ-net N for a suitable range space and then defining the core for each pseudodisks $R \notin N$ by removing from R the portion of it covered by the union of pseudodisks in N. However, the problem in doing this is that the resulting cores may not be connected. This causes problems because if the cores are not connected then the cores not intersecting a separator curve $\mathcal{C}$ may still cover points in both *interior*$(\mathcal{C})$ and *exterior*$(\mathcal{C})$.

5 Lower-bounds

In this section we give examples of regions of low union complexity that are provably hard. Note that the problem is APX-hard even for a set $\mathcal{R}$ of n regions in the plane of linear union complexity [12]. Furthermore:

Observation 5.1. *The problem of approximating minimum-size set-cover is:*

1. *APX-hard for a set $\mathcal{R}$ of n 4-sided polygons in the plane of union complexity $O(n\alpha(n))$.*
2. *inapproximable within $o(\log s)$ factor for a set $\mathcal{R}$ of n $4s$-sided polygons in the plane of union complexity $n2^{\alpha(n)^{O(s)}}$, for any integer $s > 3$.*
3. *APX-hard for any $d > 3$ and inapproximable within $o(\log d)$ factor for a set $\mathcal{R}$ of n halfspaces in $\mathbb{R}^d$, for large enough d.*

Proof. 1. Chan and Grant [5] showed that computing minimum size set-covers for objects defined by shadows of line-segments in the plane is APX-hard. By Davenport-Schinzel sequences, the union complexity of n line-segments in the plane is $O(n\alpha(n))$. These shadows can be 'closed off' without any further intersections to derive the 4-sided polygons.

2. Trevisan [28] showed that computing minimum size set-covers for general set systems $(V, \{S_1, \ldots, S_m\})$ where each S_i has size $O(s)$ is inapproximable with factor $o(\log s)$ unless $P = NP$. These sets can be easily implemented using regions whose boundaries cross at most $O(s)$ times. To see this place a point corresponding to each vertex on the x-axis. Then for each set S_i construct x-monotone curve γ_i with $2s+1$ horizontal segments and $2s$ nearly vertical segments so that the points corresponding to the vertices in S_i lie above γ_i and all other points lies below γ_i. These curves can easily be drawn in such a way that any two of them intersect at most $O(s)$ times. Thus by bounds known on Davenport-Schinzel sequences, the lower envelope of the curves has complexity $O(n2^{\alpha(n)^{O(s)}})$. Thus if we consider the regions R_i defined by the set of points above γ_i we get a set of regions with small union complexity. These regions can be made bounded without increasing the union complexity.

3. There exist a set of points in $\mathbb{R}^d$ (points on the moment curve; see Matousek [17]) such that every $d/2$-sized subset can be obtained by intersection with a halfspace. Thus a set-cover problem where every set has size at most $d/2$ can be realized with halfspaces in $\mathbb{R}^d$, which together with the Trevisan bound [28] implies the lower-bound. □

6 Conclusion

In this paper we demonstrated the versatility of separator-based algorithmic design on a problem seemingly unrelated to the packing problems for which the separator had previously been successfully applied. Getting a polynomial-time approximation scheme for the set-cover problem for weighted pseudodisks in the plane and weighted halfspaces in $\mathbb{R}^3$ remains a very interesting open problem.

References

[1] A. Adamaszek and A. Wiese. Approximation schemes for maximum weight independent set of rectangles. In *Proceedings of the 54th Annual IEEE Symposium on Foundations of Computer Science (FOCS)*, 2013.

[2] A. Adamaszek and A. Wiese. A QPTAS for maximum weight independent set of polygons with polylogarithmically many vertices. In *SODA*, 2014.

[3] Pankaj K. Agarwal and Jiangwei Pan. Near-linear algorithms for geometric hitting sets and set covers. In *Symposium on Computational Geometry*, 2014.

[4] Nikhil Bansal and Kirk Pruhs. The geometry of scheduling. In *FOCS*, pages 407–414, 2010.

[5] Timothy M. Chan and Elyot Grant. Exact algorithms and APX-hardness results for geometric packing and covering problems. *Comput. Geom.*, 47(2):112–124, 2014.

[6] Timothy M. Chan, Elyot Grant, Jochen Könemann, and Malcolm Sharpe. Weighted capacitated, priority, and geometric set cover via improved quasi-uniform sampling. In *SODA*, 2012.

[7] Victor Chepoi and Stefan Felsner. Approximating hitting sets of axis-parallel rectangles intersecting a monotone curve. *Comput. Geom.*, 46(9):1036–1041, 2013.

[8] K. Clarkson and K. Varadarajan. Improved approximation algorithms for geometric set cover. *Discrete Comput. Geom.*, 37:43–58, 2007.

[9] Gruia Călinescu, Ion I. Mandoiu, Peng-Jun Wan, and Alexander Z. Zelikovsky. Selecting forwarding neighbors in wireless ad hoc networks. *Mob. Netw. Appl.*, 9(2):101–111, 2004.

[10] Thomas Erlebach and Erik Jan van Leeuwen. Approximating geometric coverage problems. In *Proceedings of the nineteenth annual ACM-SIAM symposium on Discrete algorithms*, SODA '08, 2008.

[11] Shashidhara K. Ganjugunte. *Geometric Hitting Sets and Their Variants*. PhD thesis, Duke University, 2011.

[12] Sariel Har-Peled. Being fat and friendly is not enough. *CoRR*, abs/0908.2369, 2009.

[13] Sariel Har-Peled. Quasi-polynomial time approximation scheme for sparse subsets of polygons. In *Symposium on Computational Geometry*, 2014.

[14] D. Haussler and E. Welzl. Epsilon-nets and simplex range queries. *Discrete Comput. Geom.*, 2:127–151, 1987.

[15] Dorit S. Hochbaum and Wolfgang Maass. Approximation schemes for covering and packing problems in robotics and vlsi. In *STACS*, pages 55–62, 1984.

[16] J. Komos, J. Pach, and G. Woeginger. Almost tight bounds for epsilon nets. *Discrete & Computational Geometry*, pages 163–173, 1992.

[17] J. Matousek. *Lectures in Discrete Geometry*. Springer-Verlag, New York, NY, 2002.

[18] J. Matousek, R. Seidel, and E. Welzl. How to net a lot with little: Small epsilon-nets for disks and halfspaces. In *Proceedings of Symposium on Computational Geometry*, pages 16–22, 1990.

[19] Gary L. Miller. Finding small simple cycle separators for 2-connected planar graphs. *J. Comput. Syst. Sci.*, 32(3):265–279, 1986.

[20] Nabil H. Mustafa. *Approximation of Points: Combinatorics and Algorithms*. Habilitation thesis, University of Paris-Est, 2013.

[21] Nabil H. Mustafa, Rajiv Raman, and Saurabh Ray. A separator theorem for intersecting objects in the plane. In *CCCG*, 2014.

[22] Nabil H. Mustafa, Rajiv Raman, and Saurabh Ray. Settling the APX-hardness status for geometric set cover. In *Proceedings of the 55th Annual IEEE Symposium on Foundations of Computer Science (FOCS)*, 2014.

[23] Nabil H. Mustafa and Saurabh Ray. Improved results on geometric hitting set problems. *Discrete & Computational Geometry*, 44(4):883–895, 2010.

[24] S. Narayanappa and P. Vojtechovský. An improved approximation factor for the unit disk covering problem. In *CCCG*, 2006.

[25] Janos Pach and Micha Sharir. *Combinatorial Geometry And Its Algorithmic Applications: The Alcala Lectures*. Mathematical Surveys And Monographs. American Mathematical Society, 2009.

[26] Saurabh Ray. *Weak and Strong Epsilon Nets for Geometric Range Spaces*. Phd thesis, Saarland University, Germany, 2009.

[27] R. Raz and M. Safra. A sub-constant error-probability low-degree test, and a sub-constant error-probability PCP characterization of NP. In *Proceedings of STOC*, pages 475–484, 1997.

[28] Luca Trevisan. Non-approximability results for optimization problems on bounded degree instances. In *Proceedings of the Thirty-third Annual ACM Symposium on Theory of Computing*, STOC '01, pages 453–461, 2001.

[29] K. Varadarajan. Weighted geometric set cover via quasi uniform sampling. In *Proceedings of ACM Symposium on Theory of Computing*, 2010.