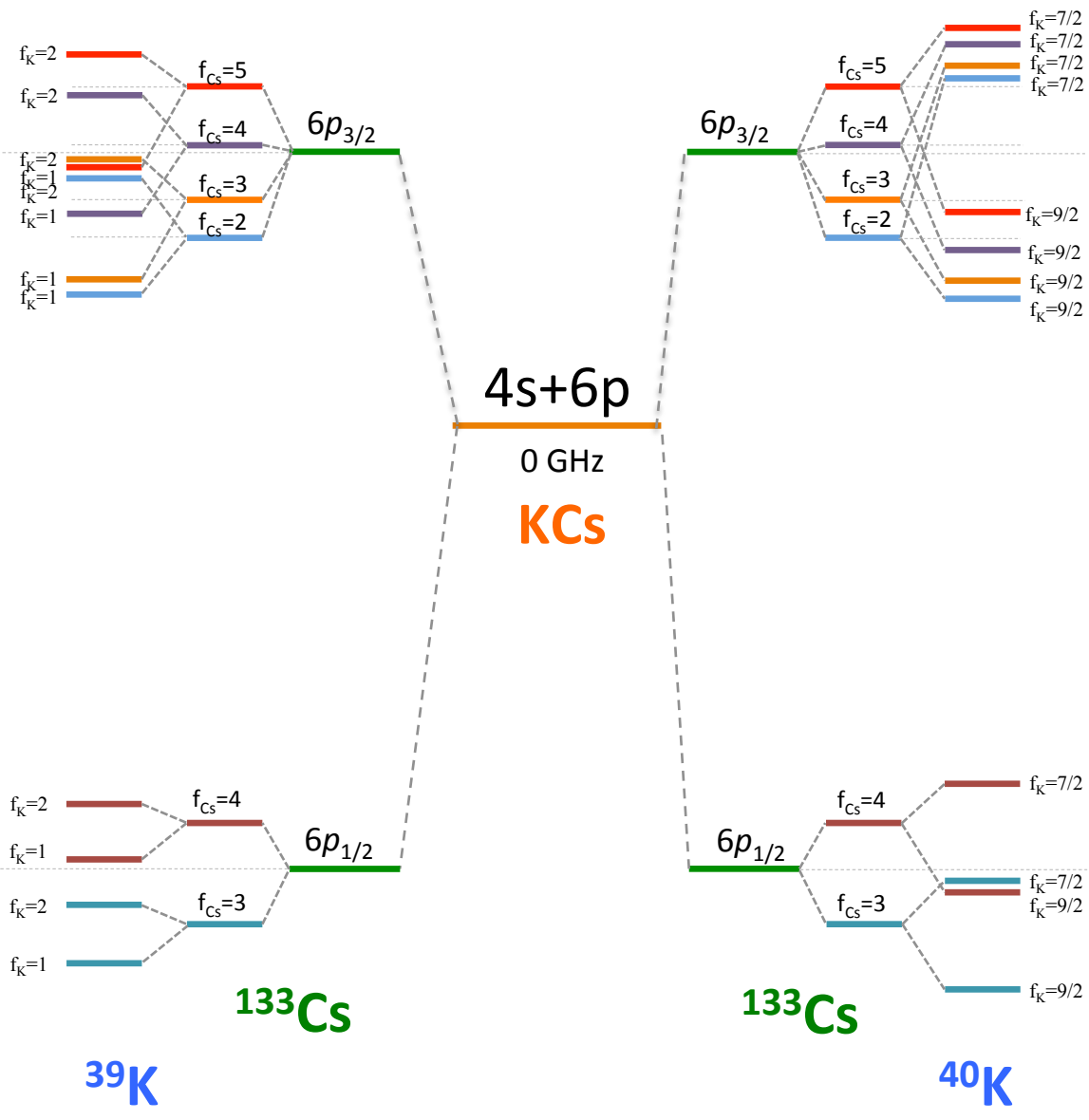
f_K=2
f_K=2
f_K=2
f_K=1
f_K=2
f_K=1
f_K=1
f_K=1
f_{Cs}=5
f_{Cs}=4
f_{Cs}=3
f_{Cs}=2
$6p_{3/2}$
$6p_{3/2}$
f_{Cs}=5
f_{Cs}=4
f_{Cs}=3
f_{Cs}=2
f_K=7/2
f_K=7/2
f_K=7/2
f_K=7/2
f_K=9/2
f_K=9/2
f_K=9/2
f_K=9/2
4s+6p
0 GHz
KCs
f_K=2
f_K=1
f_K=2
f_K=1
f_{Cs}=4
f_{Cs}=3
$6p_{1/2}$
$6p_{1/2}$
f_{Cs}=4
f_{Cs}=3
f_K=7/2
f_K=7/2
f_K=9/2
f_K=9/2
^{133}Cs
^{133}Cs
^{39}K
^{40}K