HAL
open science

Design of adaptive 2x2 space-time block codes for broadcasting applications

Ammar El Falou, Charlotte Langlais, Charbel Abdel Nour, Catherine Douillard

To cite this version:

Ammar El Falou, Charlotte Langlais, Charbel Abdel Nour, Catherine Douillard. Design of adaptive 2x2 space-time block codes for broadcasting applications. M3 Open Event : projet ANR Mobile MultiMedia, May 2013, Issy Le Moulineaux, France. 2013. hal-01170384

HAL Id: hal-01170384

https://hal.science/hal-01170384

Submitted on 8 Jul 2015

HAL is a multi-disciplinary open access archive for the deposit and dissemination of scientific research documents, whether they are published or not. The documents may come from teaching and research institutions in France or abroad, or from public or private research centers.

L'archive ouverte pluridisciplinaire **HAL**, est destinée au dépôt et à la diffusion de documents scientifiques de niveau recherche, publiés ou non, émanant des établissements d'enseignement et de recherche français ou étrangers, des laboratoires publics ou privés.

Contacts:

ammar.elfalou@telecom-bretagne.eu
charlotte.langlais@telecom-bretagne.eu
charbel.abdelnour@telecom-bretagne.eu
catherine.douillard@telecom-bretagne.eu

M3 Mobile Multi Media

Design of Adaptive 2x2 Space-Time Block Codes for Broadcasting Applications

Motivations

- Future broadcasting systems will call for multi-antenna (MIMO) transmission techniques.
- Space-time block codes (STBC) are conventionally designed according to rank-determinant criteria, efficient at high signal-to-noise ratios (SNR).
- Broadcasting transmissions are protected by powerful forward error correcting (FEC) codes able to operate at low to moderate SNRs.
- Aim: design **full-rate full-diversity STBCs** with **low detection complexity,** optimized for **a wide range of SNRs**.

STBC design criteria

- **High SNR**: rank-determinant criteria
  - **Rank criterion**: maximize the rank of $\Delta = \mathbf{X} - \hat{\mathbf{X}}$ for all possible transmitted codeword pairs $(\mathbf{X}, \hat{\mathbf{X}})$
  - **Determinant criterion**: maximize the minimum determinant

$$\delta = \min_{\mathbf{X} \neq \hat{\mathbf{X}}} \prod_{i=1}^{r} \lambda_i$$

where λ_i are the non-zero eigen values of $\Delta\,\Delta^H$

- **Any SNR**: Bitwise mutual information (BMI) criterion
  - **Maximize**

$$\mathrm{BMI}(c, \hat{c}) = 1 - \mathrm{E}[\log_2(1 + e^{-LLR})]$$

  - The optimized STBC parameters depend on the SNR

$\Rightarrow$ **construction of adaptive STBCs**

Design of adaptive STBCs

- Example of full-rate full-diversity STBC: the "**Matrix D**" code

$$\mathbf{X} = \begin{bmatrix} aS_1 + bS_3 & -cS_2^{\,*} - dS_4^{\,*} \\ aS_2 + bS_4 & cS_1^{\,*} + dS_3^{\,*} \end{bmatrix}$$

with $a = c = \frac{1}{\sqrt{2}}, d = be^{-i\pi/2}, b = \frac{1}{\sqrt{2}}e^{i\varphi}, \varphi$ being the design parameter

- Rank-determinant criteria (original value): $\varphi = 114.29°$
- BMI criterion: a value of φ is obtained at each SNR
- Based on a polynomial interpolation, φ is given (in degrees) by

$$\varphi = \begin{cases} 135; \text{ for } \frac{E_b}{N_0} \leq 5.5 \text{ dB} \\ -0.55\left(\frac{E_b}{N_0}\right)^3 - 14.32\left(\frac{E_b}{N_0}\right)^2 - 123.35\,\frac{E_b}{N_0} + 432.32; \\ \text{for } 5.5 \text{ dB} < \frac{E_b}{N_0} \leq 11 \text{ dB} \\ 114.29; \text{ for } \frac{E_b}{N_0} > 11 \text{ dB} \end{cases}$$

Performance comparison with state-of-the-art MIMO codes

- **Transmission chain model**

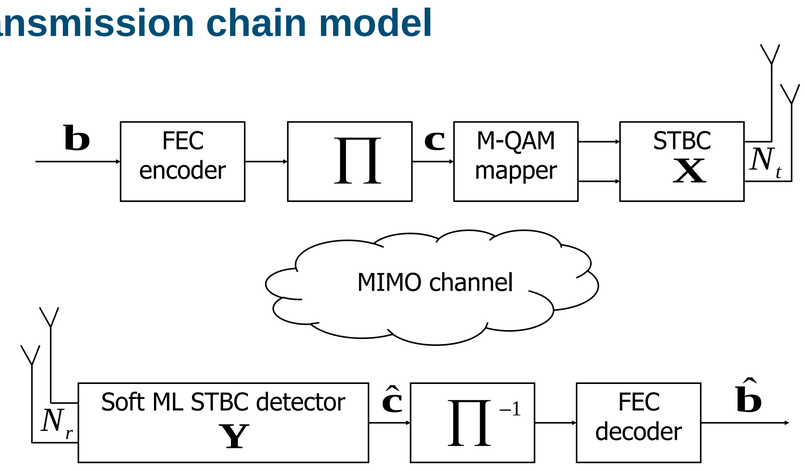

- **Simulation parameters**
  - **FEC code**: WiMAX 8-state double-binary turbo code, coding rates 1/2, 2/3, 3/4, 5/6
  - **Block size**: 4,800 bits
  - **MIMO codes**: MA = Alamouti code, MB = spatial multiplexing, MC = Golden code, MD = original matrix D STBC, Adaptive MD = proposed STBC
  - **Constellation**: 16-QAM for MA and QPSK for MB, MC, MD
  - **Channel**: quasi-static flat Rayleigh fading 2x2 MIMO channel

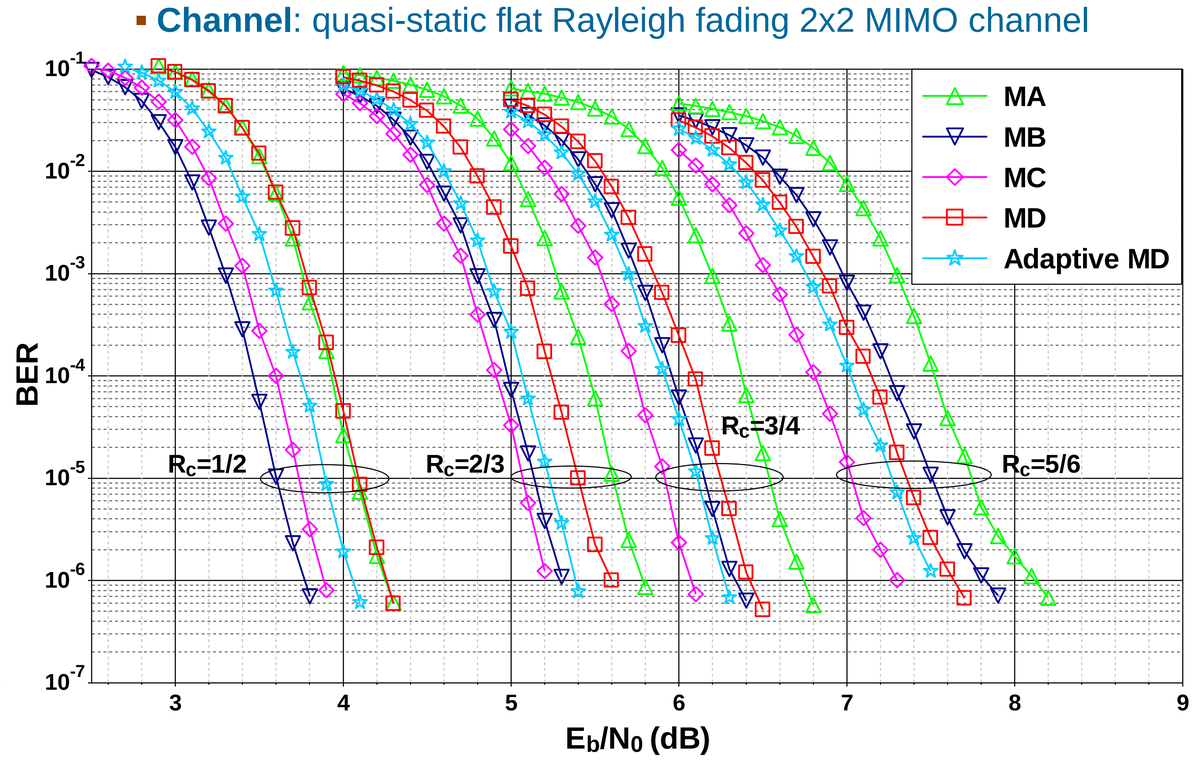

Maximum likelihood detection complexity per coded bit

MIMO profiles	4-QAM		16-QAM	
	#Add	#Mult	#Add	#Mult
MA/Alamouti	41.5	53	82.75	99
MB/Spatial Multiplexing	84	81	640	641
Adaptive MD and MD	**421**	**510**	**4,096**	**4,257**
MC/Golden Code	1,168	1,284	147,520	163,844

- Adaptive STBC is more efficient than conventional STBC used with powerful FEC coding and/or adaptive modulation and coding (e.g. in broadcasting systems).
- Proposed adaptive MD STBC closes the gap to the Golden code to less than 0.2 dB with approximately 3 times less complexity.
- Adaptive MD STBCs represent a good trade-off between performance and detection complexity.

images & réseaux · orange · Alcatel·Lucent · cnes CENTRE NATIONAL D'ÉTUDES SPATIALES · INSA RENNES · IETR · MITSUBISHI ELECTRIC Changes for the Better · Parrot move wireless · TeamCast · TELECOM Bretagne · ANR PROJET FINANCÉ PAR L'ANR - PROJECT FUNDED BY THE ANR