HAL
open science

REMARKS ON THE FULL DISPERSION KADOMTSEV-PETVIASHVLI EQUATION

David Lannes, Jean-Claude Saut

To cite this version:

David Lannes, Jean-Claude Saut. REMARKS ON THE FULL DISPERSION KADOMTSEV-PETVIASHVLI EQUATION. Kinetic and Related Models , 2013, 6, pp.1. 10.3934/krm.2013.6.xx . hal-01101990

HAL Id: hal-01101990

https://hal.science/hal-01101990v1

Submitted on 11 Jan 2015

HAL is a multi-disciplinary open access archive for the deposit and dissemination of scientific research documents, whether they are published or not. The documents may come from teaching and research institutions in France or abroad, or from public or private research centers.

L'archive ouverte pluridisciplinaire **HAL**, est destinée au dépôt et à la diffusion de documents scientifiques de niveau recherche, publiés ou non, émanant des établissements d'enseignement et de recherche français ou étrangers, des laboratoires publics ou privés.

Kinetic and Related Models
©American Institute of Mathematical Sciences
Volume **6**, Number **4**, December **2013**

doi:10.3934/krm.2013.6.xx

pp. **1–XX**

REMARKS ON THE FULL DISPERSION KADOMTSEV-PETVIASHVLI EQUATION

David Lannes

DMA, Ecole Normale Supérieure et CNRS UMR 8553
45, rue d'Ulm
75005 Paris, France

Jean-Claude Saut

Laboratoire de Mathématiques, UMR 8628
Université Paris-Sud et CNRS
91405 Orsay, France

(Communicated by the associate editor name)

In memory of Seiji Ukaï

Abstract. We consider in this paper the Full Dispersion Kadomtsev-Petviashvili Equation (FDKP) introduced in [19] in order to overcome some shortcomings of the classical KP equation. We investigate its mathematical properties, emphasizing the differences with the Kadomtsev-Petviashvili equation and their relevance to the approximation of water waves. We also present some numerical simulations.

1. **Introduction.** We all remember Professor Seiji Ukaï for his fundamental results in the theory of kinetic equations but he also made major contributions in other domains of nonlinear equations. In particular he obtained the first significant result ([30]) on the Cauchy problem associated to the Kadomtsev-Petviashvili (KP) equations (we have normalized all coefficients to one)

$$(u_t + u_x + uu_x + u_{xxx})_x \pm u_{yy} = 0, \tag{1}$$

or, in the "integrated" form

$$u_t + u_x + uu_x + u_{xxx} \pm \partial_x^{-1} u_{yy} = 0, \tag{2}$$

where the $+$ sign corresponds to the KP II equation and the $-$ sign to the KP I equation (strong surface tension).

The presence of the nonlocal operator $\partial_x^{-1}\partial_y^2$ induces an artificial and unphysical (with respect to the water waves problem for instance) zero-mass constraint [1] and a singularity at the x frequency $\xi_1 = 0$ which makes the KP equation a poor

2010 *Mathematics Subject Classification.* 35Q53, 35R11, 76B15, 76B45.

Key words and phrases. KP equation, Whitham equation, Full dispersion, Water Waves, Weakly transverse waves, Nonlocal dispersion.

D. L. acknowledges partial support from the MANU-LEFE project "SOLI" and the ANR projects BOND and DYFICOLTI. J.-C. S. acknowledges partial support from the ANR project GEODISP.

[1] This singular operator arises when approximating the dispersion relation $\omega(\xi_1,\xi_2) = \sqrt{\xi_1^2+\xi_2^2}$ of the linear wave equation in the regime $|\xi_1| \ll 1, |\xi_2| \ll 1, \left|\frac{\xi_2}{\xi_1}\right| \ll 1$ by $\pm\left(\xi_1 + \frac{1}{2}\frac{\xi_2^2}{\xi_1}\right)$, see [15].

asymptotic model in term of precision (see [20, 21]). It does not allow in particular to reach the optimal error estimates of the Boussinesq-KdV regime (see [5]).

We refer to [26] for a discussion of the "constraint problem" for the KP type equations and to [16] for a survey of mathematical results and numerical simulations on KP type equations.

In order to overcome the shortcomings of the KP equation, a five parameters family of *weakly transverse Boussinesq systems* was introduced in the same regime as the KP one in [21] (see also [24] for a generalization in presence of surface tension). Those systems do not involve any zero mass constraint and allow to derive the optimal error estimates with the full water waves system. Furthermore the dispersion of the linearized system can match well the full water waves system one by appropriate choices of the parameters.

Another approach was followed by D. Lannes ([19]) who introduced the following Full Dispersion Kadomtsev-Petviashvili equation (FDKP) for purely gravity surface waves in the small amplitude, long wave, weakly transverse regime,

$$\partial_t u + c_{WW}(\sqrt{\mu}|D^\mu|)(1+\mu\frac{D_2^2}{D_1^2})^{1/2}u_x + \mu\frac{3}{2}uu_x = 0, \tag{3}$$

where $c_{WW}(\sqrt{\mu}k)$ is the phase velocity of the linearized water waves system, namely

$$c_{WW}(\sqrt{\mu}k) = \left(\frac{\tanh\sqrt{\mu}k}{\sqrt{\mu}k}\right)^{1/2}$$

and

$$|D^\mu| = \sqrt{D_1^2+\mu D_2^2}, \quad D_1 = \frac{1}{i}\partial_x, \quad D_2 = \frac{1}{i}\partial_y.$$

Denoting by h a typical depth of the fluid layer, a a typical amplitude of the wave, λ_x and λ_y typical wave lengths in x and y respectively, the relevant regime here is when

$$\mu \sim \frac{a}{h} \sim \left(\frac{\lambda_x}{\lambda_y}\right)^2 \sim \left(\frac{h}{\lambda_x}\right)^2 \ll 1.$$

When adding surface tension effects, one has to replace (3) by

$$\partial_t u + \tilde{c}_{WW}(\sqrt{\mu}|D^\mu|)(1+\mu\frac{D_2^2}{D_1^2})^{1/2}u_x + \mu\frac{3}{2}uu_x = 0, \tag{4}$$

with

$$\tilde{c}_{WW}(\sqrt{\mu}k) = (1+\beta\mu k^2)^{\frac{1}{2}}\left(\frac{\tanh\sqrt{\mu}k}{\sqrt{\mu}k}\right)^{1/2},$$

where $\beta > 0$ is a dimensionless coefficient measuring the surface tension effects,

$$\beta = \frac{\sigma}{\rho g h^2},$$

where σ is the surface tension coefficient ($\sigma = 7.10^{-3} N\cdot m^{-1}$ for the air-water interface), g the acceleration of gravity, and ρ the density of the fluid.

One advantage of (3) on the classical KP equations is to enlarge the domain of validity of the model and to lighten the zero-mass constraint in x. Note that the linear dispersion relation matches exactly the dispersion relation of full the water waves system (hence the name "full dispersion"); in particular, the FDKP equation does not suffer of the very bad fit of the KP dispersion with that of the water waves system for low longitudinal wave numbers (see Figure 1).

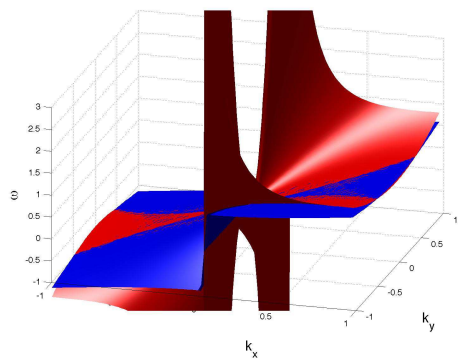

FIGURE 1. Dispersion relation of the water waves equations (blue) and of the KP equation (red) in absence of surface tension.

One recovers formally the classical KP II and KP I equations from (3) and (4) respectively by keeping the first order term in the expansions with respect to μ of the nonlocal operators occurring in (3) and (4). This will be made precise later on.

Note also that for waves depending only on x, (3) reduces to the so-called Whitham equation ([33, 34])

$$\partial_t u + \left(\frac{\tanh(\sqrt{\mu}|D_1|)}{\sqrt{\mu}|D_1|}\right)^{1/2} u_x + \mu\frac{3}{2}uu_x = 0, \tag{5}$$

and (4) reduces to the "modified" Whitham equation

$$\partial_t u + (1+\beta\mu D_1^2)^{1/2}\left(\frac{\tanh(\sqrt{\mu}|D_1|)}{\sqrt{\mu}|D_1|}\right)^{1/2} u_x + \mu\frac{3}{2}uu_x = 0. \tag{6}$$

Remark 1. Equation (6) displays interesting mathematical features. Some of them concerning the solitary waves and the Cauchy problem will be addressed in Section 5. For small frequencies, it is approximated by the *KdV equation*

$$\partial_t u + u_x + \frac{\mu}{2}D_1^2(\beta - \frac{1}{3})u_x + \mu\frac{3}{2}uu_x = 0.$$

For large frequencies (6) can be seen as a perturbation of

$$\partial_t u + \beta^{1/2}\mu^{1/4}|D_1|^{1/2}u_x + \mu\frac{3}{2}uu_x = 0,$$

which, up to a rescaling, is the "L^2- critical dispersive Burgers equation" (see [22])

$$\partial_t u + |D_1|^{1/2}u_x + uu_x = 0.$$

The aim of the present paper is to investigate some mathematical properties of the FDKP equation (3) and to make relevant comparisons with the Kadomtsev-Petviashvili equation, in particular as models for the propagation of water waves. We also provide numerical simulations to illustrate our results and to suggest further studies.

1.1. **Notations.** The norm in L^2 based Sobolev space H^s will be denoted $||u||_s$. The norm in Lebesgue spaces L^p will be denoted $|u|_p$.

2. **The linearized equation.** Let us study first the linearized equation, that is for purely gravity waves

$$\partial_t u + \mathcal{P}(D_1, D_2)u = 0, \tag{7}$$

where $\mathcal{P} = \mathcal{P}(D_1, D_2)$ is the Fourier multiplier defined as

$$\mathcal{P}(D_1, D_2) = c_{WW}(\sqrt{\mu}|D^\mu|)(1 + \mu\frac{D_2^2}{D_1^2})^{1/2}\partial_x.$$

The symbol of $p(\xi_1, \xi_2)$ of $\mathcal{P}$ can be written

$$p(\xi_1, \xi_2) = \frac{i}{\mu^{1/4}}\left(\tanh[\sqrt{\mu}(\xi_1^2 + \mu\xi_2^2)^{\frac{1}{2}}]\right)^{\frac{1}{2}}(\xi_1^2 + \mu\xi_2^2)^{\frac{1}{4}}\text{sgn}\,\xi_1; \tag{8}$$

since it is real valued, it is clear that the linearized equation defines unitary group in all Sobolev spaces $H^s(\mathbb{R}^2), s \in \mathbb{R}$.

Although we will not use them in the present paper, the derivation of dispersive estimates (Strichartz estimates) for the linearized FDKP equations is an interesting issue. For the KP equations (1) and (2), Strichartz estimates can be derived simply by an estimate on the oscillatory integral

$$I(x, y, t) = \int_{\mathbb{R}^2} e^{it\left(\xi_1^3 \pm \frac{\xi_2^2}{\xi_1}\right) + i(x\xi_1 + y\xi_2)} d\xi_1\xi_2$$

because it can be reduced to a one-dimensional integral (see [28, 26]). This argument can be generalized if the dispersive term ∂_x^3 is replaced for instance by $\partial_x|D_1|^\alpha$, $\alpha > 1/2$, by considering the oscillatory integral

$$I(x, y, t) = \int_{\mathbb{R}^2} e^{it\left(\xi_1|\xi_1|^\alpha) + \frac{\xi_2^2}{\xi_1}\right) + i(x\xi_1 + y\xi_2)} d\xi_1 d\xi_2.$$

This reduction to the one-dimensional case does not work for the linearized FDKP equation (7). Another difficulty comes from the non homogeneity of the symbols, which forces to treat differently high and low frequencies, as for instance in [14] where dispersive estimates are derived for a class of wave equations

$$i\partial_t u + \phi\left(\sqrt{-\Delta}\right)u = 0, \tag{9}$$

under suitable assumptions on the function ϕ. Note however that the linearized FDGP equations does not belong to the class (9) due to the presence of the term sgn ξ_1 which makes the symbol not radial and discontinuous.

Another interesting aspect of the linearized FDKP equation is the singularity of its symbol at $\xi_1 = 0$. Indeed, due to the presence of sgn(ξ_1) in (8), the symbol $p(\xi_1, \xi_2)$ is not continuous at the origin. It remains however bounded, which is not the case for the symbol of the linear KP equation[2],

$$p_{KP}(\xi_1, \xi_2) = i\Big(\xi_1 + \frac{\mu}{2}\frac{\xi_2^2}{\xi_1} - \frac{\mu}{6}\xi_1^3\Big),$$

which grows to infinity as $\xi_1 \to 0$ if $\xi_2 \neq 0$ (see Figure 1 for a graphical illustration). As noted in [16], the linear KP cannot preserve strong decay properties[3] of the initial

[2]Contrary to (1) and (2), coefficients have not been rescaled to one here.
[3]The same property also holds for the nonlinear flow.

data due to this strong singularity. Solutions to the linear KP equations can indeed be written under the form

$$\hat{u}(\xi_1,\xi_2,t) = \hat{u_0}(\xi_1,\xi_2)\exp\left(-itp_{KP}(\xi_1,\xi_2)\right);$$

considering for instance a gaussian initial data, one can check that the solution cannot decay faster than $1/(x^2+y^2)$ at infinity. In fact the Riemann-Lebesgue theorem implies that $u(\cdot,t) \notin L^1(\mathbb{R}^2)$ for any $t \neq 0$. The same conclusion holds of course even if u_0 satisfies the zero-mass constraint, *e.g.* $u_0 \in \partial_x \mathcal{S}(\mathbb{R}^2)$ and also for the nonlinear problem as shows the Duhamel representation of the solution, see [16].

A similar obstruction holds for the linear FDKP equations[4]. Also, the localized solitary waves solutions, if they exist (which is not unlikely for capillary waves) cannot decay fast at infinity. We present in Section 6.3 several numerical computations suggesting the existence of "lump-like" solitary waves for the FDKP equation with strong surface tension.

We now look at the asymptotic behavior of the symbols for large and small frequencies. Since for positive $z's$,

$$\tanh z = 1 + R(z), \quad \text{with} \quad |R(z)| = |-\frac{e^{-z}}{\cosh z}| \leq e^{-z},$$

one can write $p(\xi_1,\xi_2)$ as

$$p(\xi_1,\xi_2) = i \text{ sign } \xi_1 \frac{1}{\mu^{1/4}}(\xi_1^2+\mu\xi_2^2)^{1/4} + Q(\xi_1,\xi_2),$$

where $|Q(\xi_1,\xi_2)|$ decays fast to zero as $|\xi| \to +\infty$, namely, setting $\xi_\mu = (\xi_1, \sqrt{\mu}\xi_2)$,

$$Q(\xi_1,\xi_2) = \frac{i \text{ sign } \xi_1}{2\mu^{1/4}}|\xi_\mu|^{1/2}\big[R(\sqrt{\mu}|\xi_\mu|) + O(R(\sqrt{\mu}|\xi_\mu|)^2)\big].$$

In other words one has

$$\mathcal{P}(D_1,D_2) = \frac{1}{\mu^{1/4}}\mathcal{H}(-\Delta^\mu)^{1/4} + \mathcal{Q},$$

where $\mathcal{H}$ is the Hilbert transform in x_1, $\Delta^\mu = \partial_x^2 + \mu\partial_y^2$, and $\mathcal{Q}$ is a smoothing operator (of order $-\infty$).

On the other hand, $\mathcal{P}$ behaves as $\mathcal{H}(-\Delta^\mu)^{1/2}$ for small frequencies, which is obviously different than the high-frequency behavior. It is worth noting that this low-frequency behavior still contains the "$\partial_x^{-1}\partial_y^2$ term" typical of the KP I/II equations. Looking at the symbols, one has indeed

$$\begin{aligned}\text{sgn}(\xi_1)\sqrt{\xi_1^2+\mu\xi_2^2} &= i\xi_1(1+\mu\frac{\xi_2^2}{\xi_1^2})^{1/2} \\ &= i\xi_1 + i\mu\frac{\xi_2^2}{2\xi_1} + O(\mu^2),\end{aligned}$$

[4]Note however that if the initial condition satisfies the zero mass constraint, say, that it belongs to $\partial_x\mathcal{S}(\mathbb{R}^d)$ with $\mathcal{S}(\mathbb{R}^d)$ the Schwartz class, then the Fourier transform of the solution to the linearized equation belongs to $H^1 \cap W^{1,\infty}(\mathbb{R}^2)$, while this is not the case for the KP equation. Similarly, the time derivatives of the solution all belong to $\mathcal{S}(\mathbb{R}^d)$, which is not the case with the KP equation.

so that the "low frequency" linear FDKP equation is formally approximated at first order in μ by the equation[5]

$$\partial_t u + \partial_x u + \mu \frac{1}{2} \partial_x^{-1} \partial_y^2 u = 0. \tag{10}$$

The "$\partial_x^{-1}\partial_y^2$ term" term of the KP I/II equations is therefore a generic term in the sense that it appears in many other contexts, when weakly transverse waves are considered (see for instance [4, 10]). It is however not the only possible context of occurrence of such a term; the equation (10) is for instance known as the *linear diffractive pulse equation* in optics, where it is used as an alternative model to the linear Schrödinger equation to describe the evolution of ultra short laser pulses [2].

The equation (10) differs from the linear KP equation because the third order derivative in x is missing. In order to recover the linear KP equation, one has to make a formal expansion with respect to μ on the full symbol $p(\xi_1, \xi_2)$ of the linear FDKP equation (and not only on its low or high frequency components). One computes

$$\begin{aligned} p(\xi_1, \xi_2) &= i\left(\xi_1 + \frac{\mu}{2}\frac{\xi_2^2}{\xi_1} - \frac{\mu}{6}\xi_1^3\right) + O(\mu^2) \\ &= p_{KP}(\xi_1, \xi_2) + O(\mu^2). \end{aligned}$$

Dropping the $O(\mu^2)$ terms, the corresponding equation is therefore the linear KP equation

$$\partial_t u + \partial_x u + \frac{\mu}{2}\partial_x^{-1}\partial_y^2 u + \frac{\mu}{6}\partial_x^3 u = 0. \tag{11}$$

Remark 2. In presence of surface tension, the linear FDKP equation becomes

$$\partial_t u + \widetilde{\mathcal{P}}(D_1, D_2) u = 0, \tag{12}$$

where the symbol of the Fourier multiplier $\widetilde{\mathcal{P}}(D_1, D_2)$ is given by

$$\tilde{p}(\xi_1, \xi_2) = \left(1 + \beta\mu(\xi_1^2 + \mu\xi_2^2)\right)^{1/2} p(\xi_1, \xi_2).$$

All the results of this section can easily be extended to this equation. In particular, one has the formal expansion

$$\tilde{p}(\xi_1, \xi_2) = i\left(\xi_1 + \frac{\mu}{2}\frac{\xi_2^2}{\xi_1} - \frac{\mu}{6}(1 - 3\beta)\xi_1^3\right) + O(\mu^2)$$

and, in presence of surface tension, one recovers instead of (23) the following linear KP equation

$$\partial_t u + \partial_x u + \frac{\mu}{2}\partial_x^{-1}\partial_y^2 u + \frac{\mu}{6}(1 - 3\beta)\partial_x^3 u = 0, \tag{13}$$

which is of KP II type if $\beta < 1/3$ (small surface tension), and of KP I type if $\beta > 1/3$ (strong surface tension).

Remark 3. The expansion $p = p_{KP} + O(\mu^2)$ in only formal in the above computations. Due to the singularity in $1/\xi_1$, it can only be made rigorous when this singularity is controlled by a cancellation of the solution u at low frequencies in x, or equivalently, under a zero mass constraint, typically, $u \in \partial_x H^s(\mathbb{R}^2)$. Even under such a condition, the convergence is very poor and this is why the convergence rate of the KP equation as a model for the propagation of weakly transverse water waves is very slow: it is of order $o(1)$ as $\mu \to 0$, while one has a $O(\mu^2 t)$ convergence rate

[5] The same analysis on the "high frequency" linear FDKP equation mentioned above leads to a completely different equation of no specific interest.

for the KdV approximation for instance [3], which gives $O(\mu)$ on the relevant time scales of order $O(\mu^{-1})$. Weakly transverse Boussinesq models do not require the asymptotic expansion leading to the $1/\xi_1$ singularity and have therefore a good convergence rate also [21, 19]. For the same reasons, the FDKP is likely to be a much more precise approximation than the KP equation to describe weakly transverse waves.

3. **The nonlinear problem.** We first observe that, as for the classical KP I/II equations, the L^2 norm is formally conserved by the flow of (3) and so is the Hamiltonian

$$\mathfrak{H}_\mu(u) = \frac{1}{2}\int_{\mathbb{R}^2} |H_\mu(D)u|^2 + \frac{\mu}{4}\int_{\mathbb{R}^2} u^3, \tag{14}$$

where

$$H_\mu(D) = \left(\frac{\tanh(\sqrt{\mu}|D^\mu|)}{\sqrt{\mu}|D^\mu|}\right)^{1/4}\left(1+\mu\frac{D_2^2}{D_1^2}\right)^{1/4} = \left(\frac{\tanh(\sqrt{\mu}|D^\mu|)}{\sqrt{\mu}}\right)^{1/4}\frac{|D^\mu|^{1/4}}{|D_1|^{1/2}};$$

the conservation of $\mathfrak{H}_\mu(u)$ is indeed a direct consequence of the fact that (3) can be written under the form

$$\partial_t u + \partial_x(\delta\mathfrak{H}_\mu(u)) = 0, \tag{15}$$

where $\delta\mathfrak{H}_\mu(u)$ denotes the variational derivative of $\mathfrak{H}_\mu(u)$.

Observe that unlike the Cauchy problem, the Hamiltonian for the FDKP equation requires a zero mass constraint to be well defined. This constraint however is weaker than for the classical KP equations[6] (see §4 for more comments on these aspects). Namely the "energy space" associated to the FDKP equations is

$$E = \{u \in L^2(\mathbb{R}^2)\cap L^3(\mathbb{R}^2), \quad |D^\mu|^{1/4}|D_1|^{-1/2}u, \quad |D_2|^{1/2}|D_1|^{-1/2}u \in L^2(\mathbb{R}^2)\}.$$

Again, one finds the standard KP Hamiltonian by expanding formally $H_\mu(D)$ in powers of μ, namely

$$\mathfrak{H}_\mu(u) = \mathfrak{H}_{KP}(u) + O(\mu)$$

with

$$\mathfrak{H}_{KP}(u) = \frac{1}{2}\int_{\mathbb{R}^2} u^2 + \frac{\mu}{4}\int_{\mathbb{R}^2}[|\partial_y\partial_x^{-1}u|^2 - \frac{1}{3}|\partial_x u|^2 + u^3]dxdy.$$

Replacing $\mathfrak{H}_\mu(u)$ by $\mathfrak{H}_{KP}(u)$ in (15), the resulting equation is the KP I equation

$$\partial_t u + \partial_x u + \frac{\mu}{2}\partial_x^{-1}\partial_y^2 u + \frac{\mu}{6}\partial_x^3 u + \mu\frac{3}{2}uu_x = 0. \tag{16}$$

Remark 4. Both the FDKP equation (3) and the KP equation (16) can be seen as dispersive and nonlinear perturbations of the transport equation $\partial_t u + \partial_x u = 0$ when μ is small. The influence of these perturbations are better seen (especially in the numerical computations) if we get rid of the transport term and rescale the time. More precisely, defining $\mathtt{u}$ as

$$u(t,x,y) = \mathtt{u}(\mu t, x-t, y),$$

the FDKP and KP equations become respectively

$$\partial_t \mathtt{u} + \frac{1}{\mu}\Big(c_{WW}(\sqrt{\mu}|D^\mu|)(1+\mu\frac{D_2^2}{D_1^2})^{1/2} - 1\Big)\mathtt{u}_x + \frac{3}{2}\mathtt{u}\mathtt{u}_x = 0. \tag{17}$$

[6] In the sense that the order of vanishing of the Fourier transform at the frequency $\xi_1 = 0$ is weaker than the corresponding one for the KP equations.

and

$$\partial_t \mathtt{u} + \frac{1}{2}\partial_x^{-1}\partial_y^2 \mathtt{u} + \frac{1}{6}\partial_x^3 \mathtt{u} + \frac{3}{2}\mathtt{u}\mathtt{u}_x = 0. \tag{18}$$

Our numerical comparisons of the FDKP and KP equations will be made on these two equations.

Remark 5. In presence of surface tension, the Hamiltonian $\widetilde{\mathfrak{H}}_\mu(u)$ is found by replacing $H_\mu(D)$ in the Hamiltonian $\mathfrak{H}_\mu(u)$ by

$$\begin{aligned}\widetilde{H}_\mu(D) &= \left(\frac{(1+\beta\mu|D^\mu|^2)\tanh(\sqrt{\mu}|D^\mu|)}{\sqrt{\mu}|D_\mu|}\right)^{1/4}\left(1+\mu\frac{D_2^2}{D_1^2}\right)^{1/4}\\ &= \left(\frac{(1+\beta\mu|D^\mu|^2)\tanh(\sqrt{\mu}|D^\mu|)}{\sqrt{\mu}}\right)^{1/4}\frac{|D^\mu|^{1/4}}{|D_1|^{1/2}}.\end{aligned}$$

The corresponding energy space is

$$\begin{aligned}\tilde{E} = \{&u \in L^2(\mathbb{R}^2)\cap L^3(\mathbb{R}^2),\\ &|D_1|^{1/4}u, \quad |D_2|^{3/4}|D_1|^{-1/2}u, \quad |D_2|^{1/2}|D_1|^{-1/2} \in L^2(\mathbb{R}^2)\}\end{aligned}$$

and the KP I (if $\beta > 1/3$) or KP II (if $\beta < 1/3$) Hamiltonian is found by a formal expansion with respect to μ,

$$\widetilde{\mathfrak{H}}_{KP}(u) = \frac{1}{2}\int_{\mathbb{R}^d} u^2 + \frac{\mu}{4}\int_{\mathbb{R}^2}[|\partial_y\partial_x^{-1}u|^2 + (\beta - \frac{1}{3})|\partial_x u|^2 + u^3]dxdy.$$

The corresponding evolution equation is

$$\partial_t u + \partial_x u + \frac{\mu}{2}\partial_x^{-1}\partial_y^2 u + \frac{\mu}{6}(1-3\beta)\partial_x^3 u + \mu\frac{3}{2}uu_x = 0.$$

Since (3) and (4) are skew-adjoint perturbations of the Burgers equation, one establishes by standard methods the following result which is valid for both gravity and capillary-gravity waves but of course does not take advantage of the dispersion.

Proposition 1. *Let $s > 2$ and $u_0 \in H^s(\mathbb{R}^2)$. There exist $T(||u_0||_s, \mu) = O(\frac{1}{\mu})$ and a unique solution $u \in C([0, T(||u_0||_s, \mu)], H^s(\mathbb{R}^2))$ of (3) with initial data u_0. Moreover,*

$$|u(\cdot, t)|_2 = |u_0|_2, \quad t \in [0, T(||u_0||_s, \mu)].$$

Remark 6. It is very unlikely, at least in the case of gravity waves, that one could lower the exponent s by lack of strong dispersive effects in the FDKP equation[7]. We recall that the KP II equation is locally (thus globally) well-posed for data in $L^2(\mathbb{R}^2)$ ([7]) and even in a larger space ([29]).
On the other hand, a lifespan of order $0(\frac{1}{\mu})$ is what is needed to obtain optimal error estimates with the full water waves system (see [19]).

If u_0 satisfies furthermore an appropriate constraint, $u(\cdot, t)$ satisfies the constraint on $[0, T]$ and the Hamiltonian is conserved. More precisely,

Proposition 2. *Assume that $s > 2$ and $u_0 \in H^s(\mathbb{R}^2) \cap E$ (resp. $u_0 \in H^s(\mathbb{R}^2) \cap \tilde{E}$). Then the solution u in Proposition 1 remains in E (resp. $\tilde{E}$) on $[0, T]$ and the Hamiltonian is conserved on $[0, T]$.*

[7]Contrary to the one-dimensional case, see the final Section.

Proof. We restrict to the pure gravity waves case. Denoting by $S_{FD}(t)$ the linear FDKP group (see Section 4), we apply the operator $|D^\mu|^{1/4}|D_1|^{-1/2}$ to the Duhamel representation of u

$$\begin{aligned}|D^\mu|^{1/4}|D_1|^{-1/2}u(t) =& S_{FD}(t)|D^\mu|^{1/4}|D_1|^{-1/2}u_0 \\ &+ \frac{3\mu}{4}\partial_x|D^\mu|^{1/4}|D_1|^{-1/2}\int_0^t S_{FD}(t-s)u^2(s)ds.\end{aligned}$$

The free term belongs to L^2 by assumption. On the other hand, $\partial_x|D^\mu|^{1/4}|D_1|^{-1/2}u^2 \in H^{s-3/4}(\mathbb{R}^2) \subset L^2(\mathbb{R}^2)$, and we have persistency of the constraint $|D^\mu|^{1/4}|D_1|^{-1/2}u \in L^2$. One proceeds similarly for the constraint $|D_2|^{1/2}|D_1|^{-1/2}u \in L^2$

In order to prove the conservation of the Hamiltonian we follow the approach of [28, 25] for the KP equation.

Let $Y^s = \{f \in H^s(\mathbb{R}^2) \cap E; |D^\mu||D_1|^{-1}f \in L^2(\mathbb{R}^2)\}$. A similar argument as above using the Duhamel formula proves that Y^s is invariant by the FDKP flow. We have furthermore

Lemma 3.1. *Y^s is dense in $H^s(\mathbb{R}^2) \cap E$.*

Proof. Let $f \in H^s(\mathbb{R}^2) \cap E$. For $\delta > 0$ we define f_δ by its Fourier transform as $\widehat{f_\delta} = \chi_{|\xi_1|\geq\delta}\hat{f}$. Clearly $f_\delta \in H^s(\mathbb{R}^2) \cap E$. Moreover

$$\int_{\mathbb{R}^2} \frac{\xi_1^2 + \mu\xi_2^2}{|\xi_1|^2}|\widehat{f_\delta}(\xi_1,\xi_2)|^2 d\xi \leq \frac{1}{\delta^2}\int_{\mathbb{R}^2}(\xi_1^2 + \mu\xi_2^2)|\widehat{f_\delta}(\xi_1,\xi_2)|^2 d\xi \leq \frac{1}{\delta^2}||f||_1^2,$$

proving that $f_\delta \in Y^s$. We now prove that f_δ tends to f as δ tends to zero.

$$||f - f_\delta||^2_{H^s\cap E} = \int_{\mathbb{R}^2}\left((1+\xi_1^2+\xi_2^2)^s + \frac{|D^\mu|^{1/2}}{|\xi_1|} + \frac{|\xi_2|}{|\xi_1|}\right)|\hat{f} - \hat{f}_\delta|^2 d\xi \tag{19}$$

$$= \int\int_{|\xi_1|\leq\delta}\left((1+\xi_1^2+\xi_2^2)^s + \frac{|D^\mu|^{1/2}}{|\xi_1|} + \frac{|\xi_2|}{|\xi_1|}\right)|\hat{f}|^2 d\xi, \tag{20}$$

and the result follows since the last integral tens to zero by Lebesgue theorem since the integrand lies in $L^1(\mathbb{R}^2)$. □

To prove the conservation of the Hamiltonian, we use a density argument assuming first that $u_0 \in Y^s$ so that the corresponding solution lies in $C([0,T], Y^s)$ by the above considerations. We now multiply (3) by

$$\mu^{-1/4}(\tanh(\sqrt{\mu}|D^\mu|))^{1/2}|D^\mu|^{1/2}|D_1|^{-1}u + \frac{3\mu}{4}u^2$$

(which is meaningful for $u \in Y^s$), and the conclusion follows readily by integration by parts. The conservation of $\mathfrak{H}_\mu$ when $u_0 \in H^s(\mathbb{R}^2) \cap E$ results by density. □

An interesting question is whether or not a singularity formation by shock formation or by another phenomenon is possible for (3). A blow-up by shock formation has been established in [8] for the one-dimensional equation

$$u_t + uu_x + \mathcal{H}D_x^\alpha u = 0, \tag{21}$$

where $D_x = (-\partial_x^2)^{1/2}$, in the range $0 < \alpha < 1$. We recall that $\mathcal{H}$ is the Hilbert transform in x_1. Note that (3) is a kind of two-dimensional version of (21) when $\alpha = \frac{1}{2}$, and a blow-up is likely to occur. Actually (3) is a two-dimensional extension of the Whitham equation (see [33]).

For initial data depending only on x, one is reduced to proving a finite time blow-up for solutions of the Cauchy problem to the Whitham equation written as

$$\begin{cases} \partial_t u + \dfrac{\big(\tanh(\sqrt{\mu}|D_1|)|D_1|\big)^{1/2}}{\mu^{1/4}}\mathcal{H}u + \mu\dfrac{3}{2}u\partial_x u = 0 \\ u(\cdot,0) = u_0; \end{cases} \tag{22}$$

numerical simulations suggest that such a blow up occur (see Figure 2) but to our knowledge has not been established yet – though this is a very simple adaptation of the proof of [8]. One could also adapt the proof of [9].

Proposition 3. *There exist initial data $u_0 \in L^2(\mathbb{R}) \cap C^{1+\delta}(\mathbb{R})$, with $0 < \delta < 1$, and a finite $T > 0$, depending only on u_0, such that the corresponding solution to (22) satisfies*

$$\lim_{t\to T} ||u(\cdot,t)||_{C^{1+\delta}(\mathbb{R})} = +\infty.$$

Proof. One reduces to the case of (21) with $\alpha = \frac{1}{2}$ considered in [8]. We write (22) as

$$\partial_t u + \frac{|D_1|^{1/2}}{\mu^{1/4}}\mathcal{H}u + \mathcal{Q}(D_1)u + \mu\frac{3}{2}u\partial_x u = 0,$$

where $\mathcal{Q}(D_1) = \frac{\mathcal{R}(|D_1|)|D_1|^{1/2}}{\mu^{1/4}}\mathcal{H}u$ and

$$|\mathcal{R}(|\xi_1|)| = \frac{e^{-\sqrt{\mu}|\xi_1|}}{\cosh|\sqrt{\mu}\xi_1|} \le e^{-\sqrt{\mu}|\xi_1|}$$

A close inspection of the proof in [8] reveals that it is stable under a perturbation of (21) by a term $\mathcal{Q}u$ where $\mathcal{Q} \in \mathcal{L}(L^2(\mathbb{R}), L^\infty(\mathbb{R}))$. It is clear that $\mathcal{Q} = \mathcal{Q}(D_1)$ as above satisfies this property. □

4. **The classical KP limit and the zero mass constraint.** We study the limit of (3) to the classical KP equation in the limit $\mu \to 0$, in particular how one recovers the zero mass constraint in x. This issue occurs already in the linear problem. We first recall well-known facts on the classical KP I/II equations

$$\partial_t u + \partial_x^3 u \pm \partial_x^{-1}\partial_y^2 u = 0. \tag{23}$$

The linear evolution is given in Fourier variables by

$$S_\pm(t)\widehat{u}_0(\xi_1,\xi_2) = \hat{u}(\xi_1,\xi_2,t) = \exp\{it\left(\xi_1^3 \pm \frac{\xi_2^2}{\xi_1}\right)\}\widehat{u}_0(\xi_1,\xi_2),$$

and of course it makes sense and defines a unitary group in any Sobolev space $H^s(\mathbb{R}^2)$, $s \ge 0$. On the other hand, even for smooth initial data, say in the Schwartz class, the relation

$$u_{xt} = u_{tx}$$

holds true only in a very weak sense, *e.g.* in $\mathcal{S}'(\mathbb{R}^2)$, if u_0 does not satisfy the constraint $\hat{u}_0(0,\xi_2) = \int_{-\infty}^{\infty} u_0(x,y)dx = 0$ for any $\xi_2 \in \mathbb{R}$ and $y \in \mathbb{R}$. In particular, even for smooth localized u_0, the mapping

$$\hat{u}_0 \mapsto \partial_t\hat{u} = i\left(\xi_1^3 \pm \frac{\xi_2^2}{\xi_1}\right)\exp\{it\left(\xi_1^3 \pm \frac{\xi_2^2}{\xi_1}\right)\}\hat{u}_0(\xi)$$

cannot be defined with values in a Sobolev space if u_0 does not satisfy the zero mass constraint. For instance, if u_0 is a gaussian, $\partial_t u$ is not even in L^2.

Coming back to the linear evolution of the FDKP equation, one has

$$S_{FD}(t)\widehat{u}_0(\xi_1,\xi_2) = \exp\{it\big(\tanh(\sqrt{\mu}(\xi_1^2+\mu\xi_2^2))^{1/2}\big)^{1/2}(\xi_1^2+\mu\xi_2^2)^{1/4}\text{sign }\xi_1\}\widehat{u}_0(\xi_1,\xi_2),$$

and the map $u_0 \mapsto \partial_t\tilde{S}(t)u_0$ is continuous from $H^s(\mathbb{R}^2)$ to $H^{s-1/2}(\mathbb{R}^2)$, for any $s \geq 0$.

Remark 7. For gravity-capillary waves, the linear evolution is given by

$$\tilde{S}_{FD}(t)\widehat{u}_0(\xi_1,\xi_2) = \exp\Big\{it\big(\tanh(\sqrt{\mu}(\xi_1^2+\mu\xi_2^2))^{1/2}\big)^{1/2} \times (1+\beta\mu(\xi_1^2+\mu\xi_2^2))^{1/2}(\xi_1^2+\mu\xi_2^2)^{1/4}\text{sign }\xi_1\Big\}\widehat{u}_0(\xi_1,\xi_2),$$

and the map $u_0 \mapsto \partial_t\tilde{S}(t)u_0$ is continuous from $H^s(\mathbb{R}^2)$ to $H^{s-3/2}(\mathbb{R}^2)$, for any $s \geq 0$.

Note finally that in both FDKP cases (with or without surface tension), $\partial_t u \in H^\infty(\mathbb{R}^d)$ if for instance u_0 is in the Schwartz space, say a gaussian.

5. **Solitary waves. More on the 1D problem.** It has been established in [6] that the classical KP II does not possess localized solitary waves, that is solutions of type $u(x,y,t) = \phi(x-ct,y)$ where ϕ is localized and $c > 0$. On the other hand, KP I possesses ground states solitary waves, minimizing the Hamiltonian at fixed L^2 norm[8]. It is interesting to consider similar issues for the FDKP equations. According to the just recalled resuls, it seems plausible to conjecture that no localized solitary waves exist for the FDKP equation when $\beta < 1/3$ that corresponds to the KP II equation.

A natural way of looking for solitary waves solutions of the FDKP equation of capillary-gravity waves (that is when $\beta > 1/3$) would be, similarly to the KP I equation (see [6]), to look at minimizers of the Hamiltonian with prescribed L^2 norm. This does not seem to be straightforward considering the nature of the hamiltonian and the extension to the FDKP equations of the results in [6] seems to be an open problem. A possible aproach would be (inspired by the case of the Whitham equation considered in [12]) to use that for small frequencies the FDKP equation reduces to KP I when $\beta > 1/3$. We will go back to this issue in a subsequent paper. We give in §6.3 numerical computations suggesting the existence of solitary waves for the FDKP equation in presence of strong surface tension.

More can be said in the one-dimensional case, both for the existence of solitary waves and the Cauchy problem. We have already noticed that the one-dimensional FDKP equation for gravity waves is the Whitham equation for which the existence and conditional stability of solitary waves has been established in [12]. A crucial point in [12] is the approximation by the KdV equation in the long wave limit. In particular [12] uses the "good" property of the Whitham equation phase velocity $c_{Wh}(\xi) = \left(\frac{\tanh(\sqrt{\mu}|\xi|)}{\sqrt{\mu}|\xi|}\right)^{1/2}$ for small frequencies.
On the other hand, one can check using the techniques in the proof of Theorem 4.1 in [22] that the equation (21) which shares the same dispersive properties with the Whitham equation for large frequencies when $\alpha = \frac{1}{2}$ does not possess non trivial solitary waves in the space $L^3(\mathbb{R}) \cap L^2(\mathbb{R}) \cap \dot{\mathrm{H}}^{-1/4}(\mathbb{R})$.

[8]It is conjectured but not yet proven that the explicit *lump* solution of the KP I equation (see [23]) is a ground state.

For capillary-gravity waves, we recall that the one-dimensional FDKP equation is a perturbation of the L^2-critical dispersive Burgers equation. We have seen in §3 that it could be written as an Hamiltonian flow, ie. $\partial_t u + \partial_x(\delta\widetilde{\mathfrak{H}}_\mu(u)) = 0$, with Hamiltonian

$$\widetilde{\mathfrak{H}}_\mu(u) = \frac{1}{2}\int_{\mathbb{R}^2} |\widetilde{H}_\mu(D)u|^2 + \frac{\mu}{4}\int_{\mathbb{R}^2} u^3,$$

where

$$\widetilde{H}_\mu(D) = (1+\beta\mu D_1^2)^{1/4}\left(\frac{\tanh(\sqrt{\mu}|D_1|)}{\sqrt{\mu}|D_1|}\right)^{1/4};$$

the Hamiltonian $\widetilde{\mathfrak{H}}_\mu(u)$ is therefore a formally conserved quantity.

The existence of solitary waves for the L^2 critical dispersive Burgers equation (26) is recalled in [13], the strategy being to apply M. Weinstein's idea (see [32]) of finding the best constant is a Gagliardo-Nirenberg inequality by variational methods. This method cannot be used here (since the symbol is not a pure power) but instead one should use concentration-compactness arguments as was done in [1, 31] for other nonlocal problems. This issue will be addressed in a subsequent paper.

Concerning the Cauchy problem for the Whitham equation (5), we have the following result which, contrary to Proposition 1 uses the dispersion of the equation.

Proposition 4. *(i) Let $u_0 \in H^s(\mathbb{R})$, $s > \frac{21}{16}$. There exists $T = T(||U_0||_s, \mu, \beta)$ and a unique $u \in C([0,T], H^s(\mathbb{R}))$ solution of (5) with initial value u_0. Moreover $H_\mu(t)$ and $|u(\cdot,t)|_0$ are conserved on $[0,T]$.*
(ii) Let $u_0 \in H^{1/4}(\mathbb{R})$ such that $|u_0|_2$ is small enough. Then (5) possesses a global weak solution $u \in L^\infty(\mathbb{R}; H^{1/4}(\mathbb{R}))$ with initial value u_0.

Proof. Part (ii) is obtained by a standard compactness method. We just indicate how to obtain the key a priori estimate. We recall the Gagliardo-Nirenberg inequality

$$|u|_3 \le C|u|_2^{1/3}|D^{1/4}u|_2^{2/3}. \tag{24}$$

Using the elementary inequalities for $|\xi| \ge 1$,

$$(\beta\mu^{1/2}\tanh(\sqrt{\mu}))^{1/4}|\xi|^{1/4} \le (1+\beta\mu\xi^2)^{1/4}\left(\frac{\tanh\sqrt{\mu}|\xi|}{\sqrt{\mu}|\xi|}\right)^{1/4} \le \frac{(\beta\mu+1)^{1/4}}{\mu^{1/8}}|\xi|^{1/4},$$

one deduces that there exists $C_i(\mu,\beta) > 0, i = 1,2$, such that

$$\forall|\xi| \ge 1, \qquad C_1|\xi|^{1/4} \le (1+\beta\mu\xi^2)^{1/4}\left(\frac{\tanh\sqrt{\mu}|\xi|}{\sqrt{\mu}|\xi|}\right)^{1/4} \le C_2|\xi|^{1/4},$$

and, using the L^2 conservation law, the conservation of H_μ and the Gagliardo-Nirenberg inequality, one deduces for $|u_0|_2$ small enough the a priori estimate

$$|D^{1/4}u(\cdot,t)|_2 \le C(||u_0||_{1/4}, \mu, \beta), \quad t \ge 0. \tag{25}$$

Part (i) of the proposition has been established in [22] for the equation

$$\partial_t u + |D|^{1/2}u_x + uu_x = 0. \tag{26}$$

One checks easily that for $|\xi| \ge 1$

$$q(\xi) = (1+\beta\mu\xi^2)^{1/2}\left(\frac{\tanh\sqrt{\mu}|\xi|}{\sqrt{\mu}|\xi|}\right)^{1/2} = \beta^{1/2}\mu^{1/4}|\xi|^{1/2} + R(|\xi|),$$

where

$$|R(|\xi_1|)| \leq \frac{C}{|\xi_1|^2}, \quad |\xi_1| \geq 1,$$

while q is bounded for low frequencies. This allows to extend the results of [22] to (5). □

Remark 8. The numerical simulations in [17] seem to indicate that solutions to (26) may blow up in finite time, not by a shock formation as for (22) but rather by a phenomenon similar to that of the L^2 critical generalized KdV equation. This is also likely to occur for solutions to (5).

6. **Numerical simulations.** We present here numerical illustrations that point out several qualitative differences between the usual KP equations and the FDKP equation. For both equations, we used a second order splitting scheme between the linear and nonlinear parts of the equation. The linear (dispersive) part is solved explicitly via spectral methods, while the nonlinear part is integrated via a RK4 scheme. We refer to [16, 17, 18] for instance for more accurate numerical schemes for the KP equation.

6.1. **The Whitham equation.** As explained in §3, the Whitham equation is less dispersive than the KdV equation, and displays finite time singularity formation. This is illustrated by the numerical simulations presented in Figure 2. As explained in Remark 4, we write the equations in a moving frame at speed 1 and rescale time in order to better observe the nonlinear and dispersive dynamics of the equations. We therefore compare the solutions of

$$\partial_t \mathtt{u} + \frac{1}{\mu}\Big(c_{WW}(\sqrt{\mu}|D|) - 1\Big)\mathtt{u}_x + \frac{3}{2}\mathtt{u}\mathtt{u}_x = 0. \tag{27}$$

and

$$\partial_t \mathtt{u} + \frac{1}{6}\partial_x^3 \mathtt{u} + \frac{3}{2}\mathtt{u}\mathtt{u}_x = 0. \tag{28}$$

We recall that (28) possesses solitary waves of the form

$$\mathtt{u}(t,x) = \mathtt{u}^0(x-ct), \quad \text{with} \quad \mathtt{u}^0(x) = \frac{\alpha}{\cosh(K(x-x_0))^2}, \tag{29}$$

and where $\alpha > 0$, $K = (\frac{3}{4}\alpha)^{1/2}$ and $x_0 \in \mathbb{R}$. For an initial condition of this form, Figure 2 shows that a singularity seems to form at time $t \sim 1.11$ when $\mu = 1$. For smaller values of μ, the behavior of the Whitham equation is of course closer to the KdV equation, and singularities should appear later (if at all); this is illustrated in Figure 3.

6.2. **The FDKP equation without surface tension.** We compare here the solutions of the FDKP and usual KP II equations in absence of surface tension. As explained in Remark 4 we actually compare the following two rescaled equations in order to better capture the nonlinear and dispersive dynamics

$$\partial_t \mathtt{u} + \frac{1}{\mu}\Big(c_{WW}(\sqrt{\mu}|D^\mu|)(1+\mu\frac{D_2^2}{D_1^2})^{1/2} - 1\Big)\mathtt{u}_x + \frac{3}{2}\mathtt{u}\mathtt{u}_x = 0 \tag{30}$$

and

$$\partial_t \mathtt{u} + \frac{1}{2}\partial_x^{-1}\partial_y^2 \mathtt{u} + \frac{1}{6}\partial_x^3 \mathtt{u} + \frac{3}{2}\mathtt{u}\mathtt{u}_x = 0. \tag{31}$$

We consider here an initial condition that satisfies the zero mass constraint, namely

$$\mathtt{u}(x,y) = -\partial_x\big(\mathrm{sech}^2(\sqrt{x^2+y^2})\big) \tag{32}$$

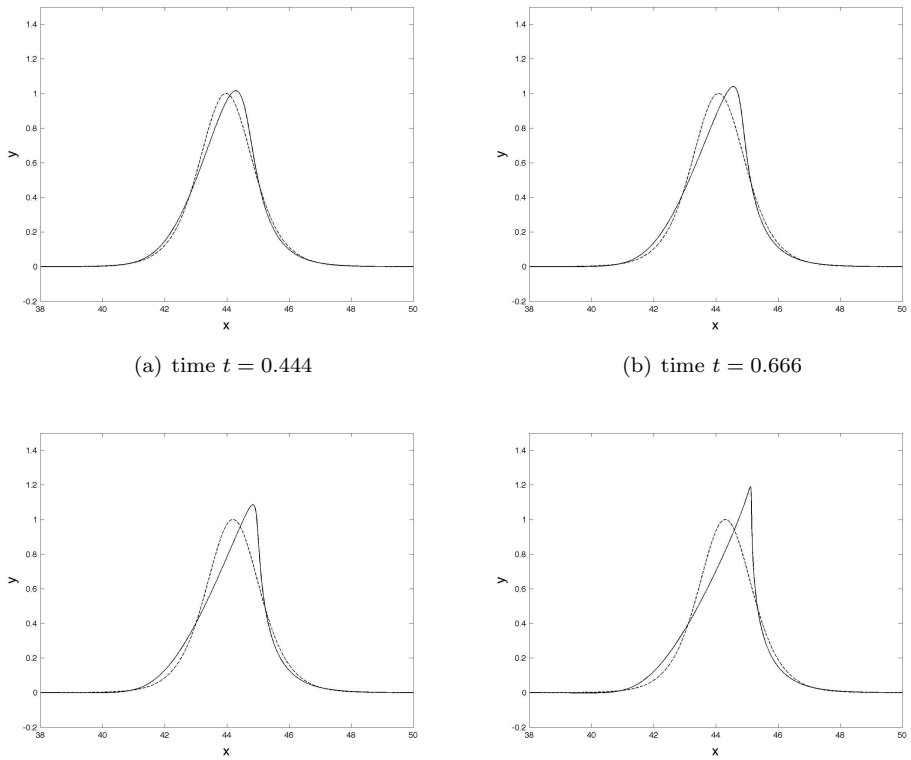

(a) time $t = 0.444$ (b) time $t = 0.666$

(c) time $t = 0.888$ (d) time $t = 1.11$

FIGURE 2. Comparison at different times of the solution to the KdV equation (28) (dash) and the Whitham equation (27) with $\mu = 1$. Initial condition is a KdV solitary wave (29) with $\alpha = 1$.

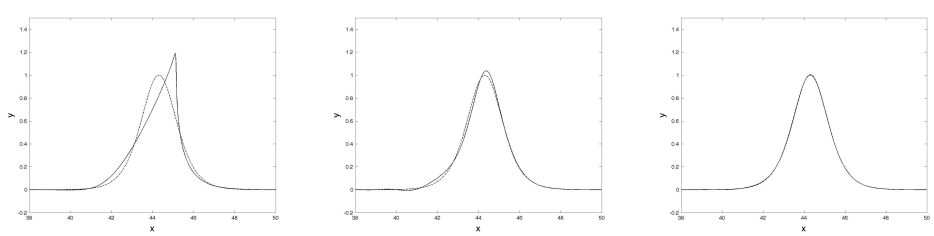

(a) $\mu = 1$ (b) $\mu = 0.1$ (c) $\mu = 0.01$

FIGURE 3. Comparison at the same time $t = 0.11$ of the solution to the KdV equation (28) (dash) and the Whitham equation (27) with different values of μ. Initial condition is a KdV solitary wave (29) with $\alpha = 1$.

(see Figure 4). In Figure 5 we represent the evolution of this initial condition by the KP equation and the FDKP equation in the case $\mu = 1$. The solution looks qualitatively the same, but a slightly stronger decay is observed for the FDKP equation. Moreover, the width of the tail at the back of the wave is narrower for the FDKP equation. This is not a surprise since this tail, with parabolic shape, is typical of the $\partial_x^{-1}\partial_y^2 u$ component of the KP equation. Indeed, as remarked in [2], the equation $\partial_t\partial_x u = \partial_y^2 u$ is a wave equation rotated 45 degrees in the coordinates (t, x). The domain of dependance is therefore the intersection of the wave cone in these rotated coordinates, intersected with the plane $\{t = 0\}$, and therefore a parabola. The influence of the value of μ on the solution is illustrated in Figure 6 where the solution at $t = 2$ is plotted for the KP equation, and the FDKP equation with $\mu = 0.01$, $\mu = 0.1$ and $\mu = 1$.

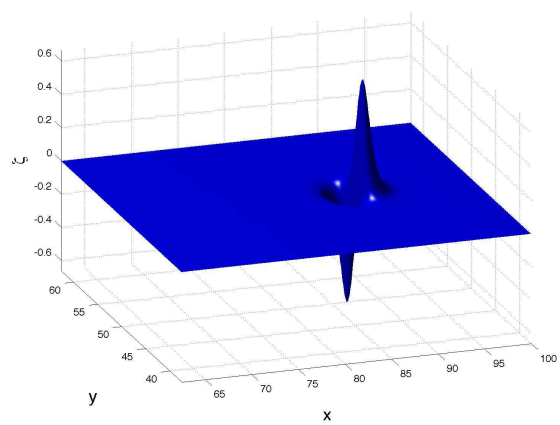

FIGURE 4. The initial condition (32).

6.3. **The FDKP equation with surface tension.** We consider FDKP equation in presence of surface tension; more precisely, we consider the case of strong surface tension ($\beta > 1/3$) where one derives the KP I equation. We compare therefore the dynamics of the following two equations,

$$\partial_t \mathtt{u} + \frac{1}{\mu}\Big((1+\beta\mu D_1^2)^{1/2} c_{WW}(\sqrt{\mu}|D^\mu|)(1+\mu\frac{D_2^2}{D_1^2})^{1/2} - 1\Big)\mathtt{u}_x + \frac{3}{2}\mathtt{u}\mathtt{u}_x = 0 \tag{33}$$

and

$$\partial_t \mathtt{u} + \frac{1}{2}\partial_x^{-1}\partial_y^2 \mathtt{u} + \frac{1}{6}(1-3\beta)\partial_x^3 \mathtt{u} + \frac{3}{2}\mathtt{u}\mathtt{u}_x = 0. \tag{34}$$

The KP equations is known to possess solitary waves solutions, called *lump*, of the form $\mathtt{u}(t, x, y) = \mathtt{u}^0(x - ct, y)$ with

$$\mathtt{u}^0(x, y) = \frac{16}{3a} V \frac{1 - \frac{V}{3}(ax)^2 + \frac{V^2}{3}(by)^2}{(1 + \frac{V}{3}(ax)^2 + \frac{V^2}{3}(by)^2)^2}, \tag{35}$$

with $a = -|\beta|^{-1/3}$, $b = \sqrt{-2a}$ and $c = V/a$ (see Figure 7). In Figure 8 we represent the evolution of this initial condition by the KP equation and the FDKP equation in the case $\mu = 1$. The solution for the KP equation is of course a translation to the

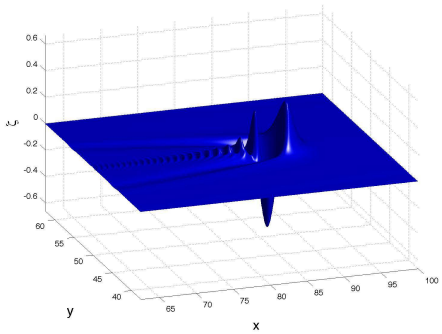

(a) time $t = 0.67$

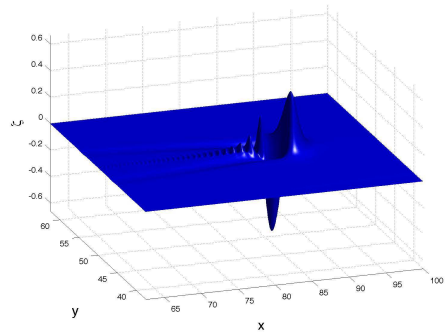

(b) time $t = 0.67$

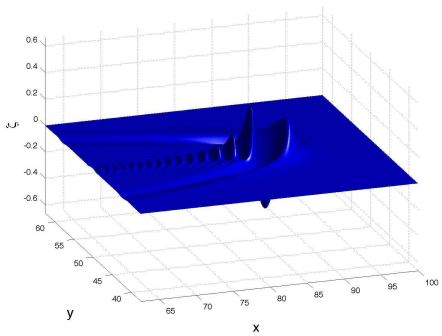

(c) time $t = 1,34$

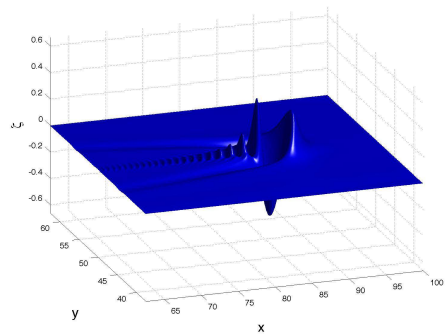

(d) time $t = 1.34$

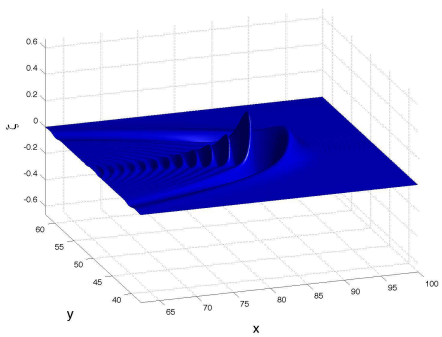

(e) time $t = 2$

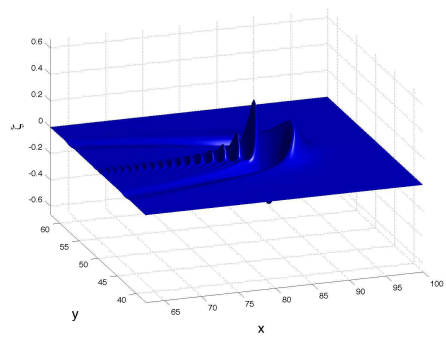

(f) time $t = 2$

FIGURE 5. Comparison at different times of the solution to the KP equation (31) (left) and the FDKP equation (30) (right) with $\mu = 1$. Initial condition is (32).

left of the initial condition, but this structure is lost with the FDKP equation for which we observe the propagation of capillary waves to the right, and an important amplification of the amplitude of the solution.

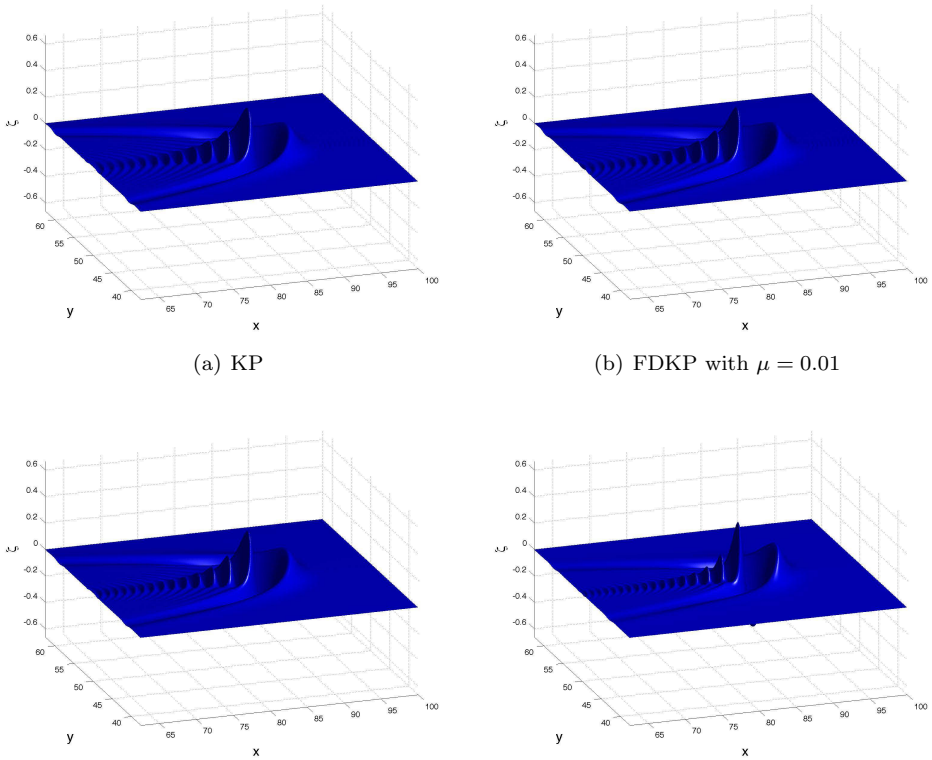

(a) KP

(b) FDKP with $\mu = 0.01$

(c) FDKP with $\mu = 0.1$

(d) FDKP with $\mu = 1$

FIGURE 6. Comparison at time $t = 2$ of the solution to (31) and (30) for different values of μ with initial condition (32).

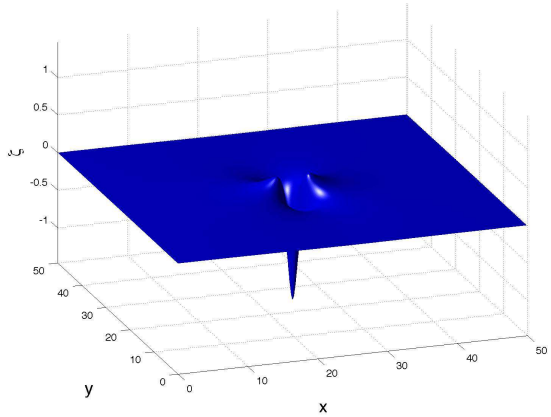

FIGURE 7. The initial condition (35).

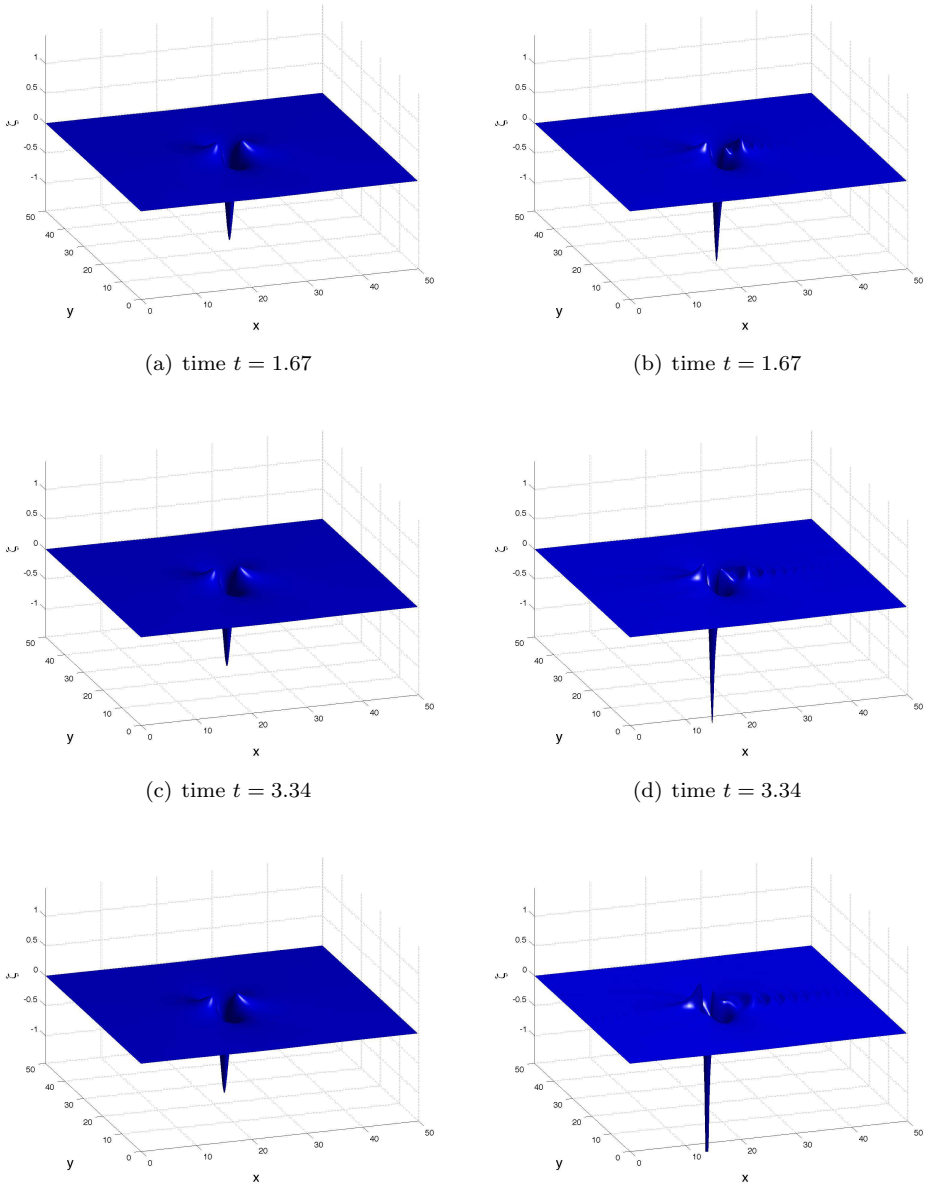

(a) time $t = 1.67$ (b) time $t = 1.67$

(c) time $t = 3.34$ (d) time $t = 3.34$

(e) time $t = 5$ (f) time $t = 5$

FIGURE 8. Comparison at different times of the solution to the KP equation (34) (left) and the FDKP equation (33) (right) with $\mu = 1$ and $\beta = 2/3$. Initial condition is (35) with $V = 0.5$.

In the $1D$ case (Whitham equation), we saw in §6.1 that the evolution of the KdV solitary wave by the Whitham equation leads to the formation of a singularity in finite time. Based on the simulations of Figure 8 and on the $1D$ case, it is natural

to ask wether the evolution of the KP I solitary wave (lump) leads to the formation of a finite time singularity under the FDKP flow. The amplification mentioned above and observed in Figure 8 may indeed look like the beginning of a blow-up mechanism in L^∞-norm but computations over a larger time scale (see Figure 9) show that another mechanism is at stake. This amplification corresponds indeed to the formation of a "lump-like" solution of larger amplitude (while part of the waves is lost by capillary radiation at the right of the lump); this structure then continues its propagation to the left without changing form, which suggests that this "lump-like" structure is a solitary wave for the FDKP equation.

As in the $1D$ case, this peculiar behavior is delayed (or even disappears) when smaller values of μ are taken in the FDKP equation. We refer to Figure 10 for numerical illustrations of this fact.

REFERENCES

1. J. Albert, J.L. Bona and J.-C.Saut, *Model equations for waves in stratified fluids*, Proc. Royal Soc. London A, **453**, (1997), 1233-1260.
2. D. Alterman, J. Rauch, *The linear diffractive pulse equation*, Methods Appl. Anal. **7** (2000), 263-274. Cathleen Morawetz: a great mathematician.
3. B. Alvarez-Samaniego, D. Lannes, *Large time existence for 3d water-waves and asymptotics*, Invent. math. **171** (2008), 485-541.
4. W. Ben Youssef, D. Lannes, *The long wave limit for a general class of 2D quasilinear hyperbolic problems*, Comm. Partial Differential Equations. **27** (2002), 979-1020.
5. J. L. Bona, T. Colin and D. Lannes, *Long-wave approximation for water waves*, Arch. Ration. Mech. Anal., **178** (2005), 373-410.
6. A. de Bouard and J.-C.Saut, *Solitary waves of generalized KP equations*, Annales IHP Analyse non Linéaire, **14**,(2), (1997) 211-236.
7. J. Bourgain, *On the Cauchy problem for the Kadomtsev-Petviashvili equation*, Geom. Funct. Anal. **3** (1993), no.4, 315–341.
8. A. Castro, D. Córdoba and F. Gancedo, *Singularity formation in a surface wave model,* Nonlinearity, **23** (2010), 2835-2847.
9. A. Constantin and J. Escher, *Wave breaking for nonlinear nonlocal shallow water equations*, Acta Math., **181** (1998), 229-243.
10. T. Colin, D. Lannes, *Long-wave short-wave resonance for nonlinear geometric optics*, Duke Math. J. **107** (2001), 351-419.
11. M. Ehrnström and H. Kalish, *Traveling waves for the Whitham equation*, Diff. Int. Equations **22** (11-12) (2009), 1193-1210.
12. M. Ehrnström, M.D. Groves and E. Wahlén, *On the existence and stability of solitary-wave solutions to a class of evolution equations of Whitham type*, Nonlinearity **25** (2012), 2903-2936.
13. R.L. Frank and E. Lenzmann, *On the uniqueness and nondegeneracy of ground states of* $(-\Delta)^s Q + Q - Q^{\alpha+1} = 0$ *in* $\mathbb{R}$, arXiv: 1009.4042 (2010).
14. Z. Guo, L. Peng and B. Wang, *Decay estimates for a class of wave equations*, J. Funct. Analysis **254** (2008), 1642-1660.
15. B. B. Kadomtsev and V. I. Petviashvili, *On the stability of solitary waves in weakly dispersing media*, Sov. Phys. Dokl. **15** (1970), 539–541.
16. C. Klein and J.-C. Saut, *Numerical study of blow-up and stability of solutions to generalized Kadomtsev-Petviashvili equations*, J. Nonlinear Science, **22**, 5, (2012) 763-811.
17. C. Klein and J.-C. Saut, *A numerical approach to blow-up issues for dispersive perturbations of the Burgers equation*, in preparation.
18. C. Klein, C. Sparber and P. Markowich , *Numerical study of oscillatory regimes in the Kadomtsev-Petviashvili equation*, J. Nonl. Sci. **17**, no. 5 (2007), 429-470.
19. D. Lannes, *The Water Waves problem : Mathematical Theory and Asymptotics.* Mathematical Surveys and Monographs, Volume 188, American Mathematical Society, Providence Rhode Island, 2013.
20. D. Lannes, *Consistency of the KP approximation*, Discrete Cont. Dyn. Syst. (2003) Suppl. 517-525.

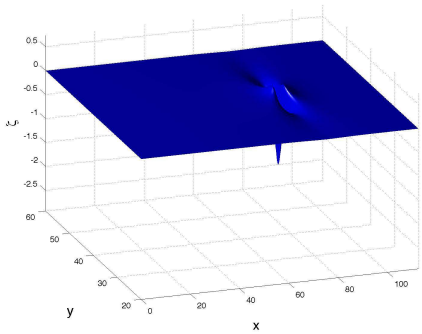

(a) time $t = 0$

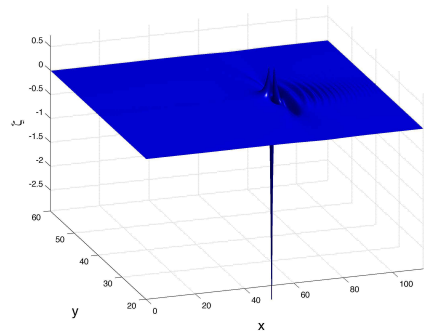

(b) time $t = 8$

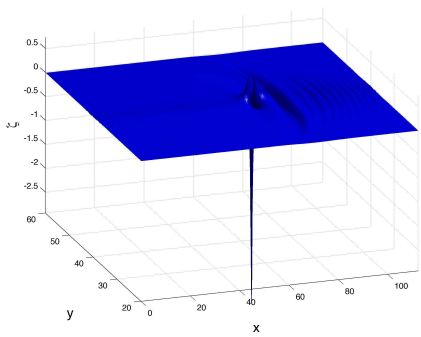

(c) time $t = 16$

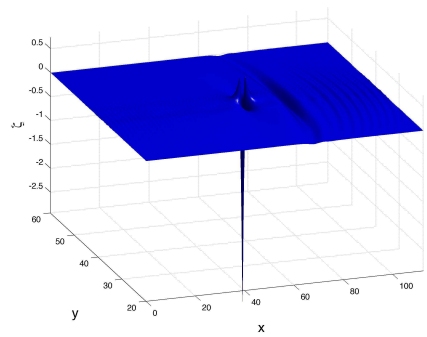

(d) time $t = 24$

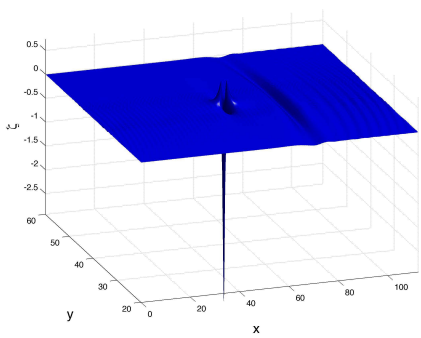

(e) time $t = 32$

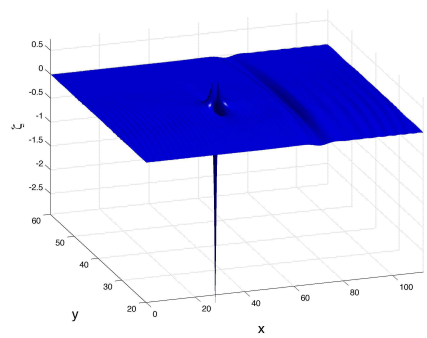

(f) time $t = 40$

FIGURE 9. Evolution of the KP lump (35) with $\beta = 2/3$, $V = 0.5$ by the FDKP equation (33) with $\mu = 1$.

21. D. LANNES AND J.-C. SAUT, *Weakly transverse Boussinesq systems and the KP approximation*, Nonlinearity **19** (2006), 2853-2875.
22. F.LINARES, D. PILOD AND J.-C. SAUT, *Dispersive perturbations of Burgers and hyperbolic equations I : local theory*, arXiv:1302.7146v1 [math.AP] 28 Feb 2013.

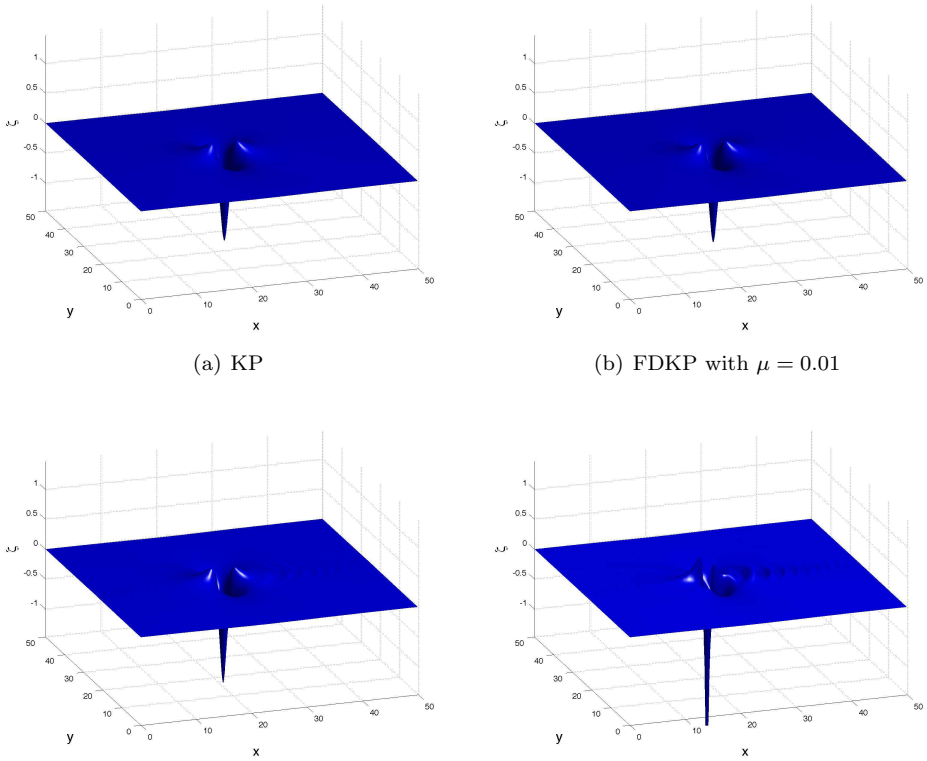

(a) KP

(b) FDKP with $\mu = 0.01$

(c) FDKP with $\mu = 0.1$

(d) FDKP with $\mu = 1$

FIGURE 10. Comparison at time $t = 5$ of the solution to (34) and (33) for different values of μ with initial condition (35) with $\beta = 2/3$ and $V = 0.5$.

23. S. V. MANAKOV, V.E. ZAKHAROV, L. A. BORDAG AND V.B. MATVEEV, *Two-dimensional solitons of the Kadomtsev-Petviashvili equation and their interaction*, Phys. Lett. A **63**, 205-206 (1977).
24. M. MING, P. ZHANG, Z. ZHANG, *Long-wave approximation to the 3-D capillary-gravity waves*, SIAM J. Math. Anal. **44** (2012), 2920-2948.
25. L. MOLINET, *On the asymptotic behavior of solutions to the (generalized) Kadomtsev-Petviashvili-Burgers equations*, J. Diff. Eq. **152** (1999), 30-74.
26. L. MOLINET, J.-C. SAUT AND N. TZVETKOV, *Remarks on the mass constraint for KP type equations*, SIAM J. Math. Anal. **39**, no.2 (2007), 627-641.
27. P.I. NAUMKIN AND I.A. SHISHMAREV, *Nonlinear Nonlocal Equations in the Theory of Waves*, Translations of Mathematical Monographs, vol. 133, AMS Providence 1994.
28. J. -C. SAUT, *Remarks on the generalized Kadomtsev-Petviashvili equations*, Indiana Univ. Math. J., 42 (1993), 1011-1026.
29. H. TAKAOKA AND N. TZVETKOV, *On the local regularity of Kadomtsev-Petviashvili-II equation*, IMRN 8 (2001), 77-114.
30. S. UKAÏ, *Local solutions of the Kadomtsev-Petviashvili equation*, J. Fac. Sci. Univ. Tokyo Sect. IA Math. **36** (1989), 193-209.
31. M. WEINSTEIN, *Existence and dynamic stability of solitary wave solutions of equations arising in long wave propagation*, Commun. Partial Diff. Equ. **12** (1987), 1133-1173.

32. M. Weinstein, *Nonlinear Schrödinger equations and sharp interpolation estimates*, Commun. Math. Phys., **87** (1983) 567-576.
33. G.B. Whitham, *Variational methods and applications to water waves*, Proc. R. Soc. Lond. A **299** (1967), 6-25.
34. G.B. Whitham, *Linear and nonlinear waves*, Wiley, New York 1974.

E-mail address: David.Lannes@ens.fr
E-mail address: jean-claude.saut@math.u-psud.fr