HAL
open science

Why may reduced order models based on global modes not work for closed loop control?

Alexandre Barbagallo, Denis Sipp, Peter J. Schmid

To cite this version:

Alexandre Barbagallo, Denis Sipp, Peter J. Schmid. Why may reduced order models based on global modes not work for closed loop control?. 19ème Congrès Francais de Mécanique, Aug 2009, Marseille, France. pp.S9 Instabilités et Transition, Contrôle d'Écoulement. hal-01053037

HAL Id: hal-01053037

https://hal.science/hal-01053037v1

Submitted on 29 Jul 2014

HAL is a multi-disciplinary open access archive for the deposit and dissemination of scientific research documents, whether they are published or not. The documents may come from teaching and research institutions in France or abroad, or from public or private research centers.

L'archive ouverte pluridisciplinaire **HAL**, est destinée au dépôt et à la diffusion de documents scientifiques de niveau recherche, publiés ou non, émanant des établissements d'enseignement et de recherche français ou étrangers, des laboratoires publics ou privés.

Why may reduced order models based on global modes not work for closed loop control ?

ALEXANDRE BARBAGALLO[a,b], DENIS SIPP[b], PETER J. SCHMID[a]

a. Laboratoire d'Hydrodynamique (LadHyX), CNRS-Ecole Polytechnique, Palaiseau, France
b. ONERA-DAFE, 8 rue des Vertugardins, Meudon, France.

Résumé :

Pour un nombre de Reynolds suffisamment élevé, l'écoulement au dessus d'une cavité est instable. Pour supprimer ces perturbations, un contrôle en boucle fermée avec un modèle réduit basé sur les modes globaux est considéré. En connaissant l'état du système complet à chaque instant, les perturbations sont atténuées. En revanche, lorsqu'un estimateur est incorporé dans la boucle de contrôle, celle-ci devient instable. Il est montré que ce comportement est du à une mauvaise reproduction de la loi entrée-sortie du sous-espace stable par notre modèle réduit. Un critère est alors défini pour classer les modes globaux stables selon leur importance dans la loi entrée-sortie. Les modes retenus s'avèrent être des modes très atténués, dont le calcul numérique est rendu impossible par la non-normalité de l'opérateur de Navier-Stokes. Nous en concluons que les modèles réduits basés sur les modes globaux sont inadaptés au contrôle en boucle fermée.

Abstract :

In this article, we use a reduced model based on global modes to stabilize a globally unstable cavity flow. We show that although the full-state control is successful, the partial state controller cannot stabilize the perturbations. We introduce the notion of full-state measurement control to analyze this failure and show that it is due to a lack of information of the reduced model about the stable subspace. In particular, the input-output behavior is identified as the key parameter to be captured by the reduced model. A criterion is then derived in order to select the stable global modes which are likely to contribute to the input-output behavior. These critical modes are found to be impossible to compute because of the non-normality of the Navier-Stokes operator, which leads us to the conclusion that global modes are not suitable for control based reduced models.

Mots clefs : Optimal control, Model reduction, Global modes

1 Introduction

Because of their high industrial interest, cavity flows have been extensively studied. For sufficiently high Reynold numbers, a self-sustained perturbation develops and is responsible for high noise emission (up to 160 db), additional drag and structures damages. Although, the mechanism and modelisation of this instability is well known (Rossiter (1), Tam and Block (2)), its control is still challenging.
To control flow instabilities, a lot of attention was recently focused on optimal control. Flow stabilization was obtained for a channel flow by Bewley and Liu (3). This flow case verifies the Orr-Sommerfeld equation which is one dimensional. As a result, the number of unknowns of the discretized problem is rather small (≈ 300 in their case) and the LQG control formalism can be used. However, for high dimensional discretizations arising from 2D or 3D configurations ($\approx 10^6 - 10^9$ unknowns), LQG control is not computationally affordable and a reduced model of the flow is needed.
Because of their ability to model flow instabilities, global modes are a good candidate for control based model reduction (Akervik et al. (4), Ehrenstein and Gallaire (5)). In Barbagallo et al. (6), using the same configuration, a reduced model based on global modes was successfully implemented using full-state information control (the complete flow is known) . We will show here that this is not true for partial state control (where an estimate of the flow is required).

2 Configuration and mathematical modelisation

2.1 Configuration

We consider the flow over an open square cavity (see figure 1(a)). The flow is incompressible and the Reynolds number based on the cavity depth and the inflow velocity is 7500. This flow is subject to a low frequency unsteadiness which can be modeled by a global instability approach (see Sipp and Lebedev (7)). According to

the global stability theory, we study the linear growth of perturbations. The base flow, solution of the steady Navier-Stokes equations, is computed using a Newton method and shown on figure 1(b). For this Reynolds number, the base flow is globally unstable. A feedback control strategy is implemented to suppress the instabilities, using a normal blowing and suction actuator located at the leading edge of the cavity and a shear-stress sensor at the trailing edge.

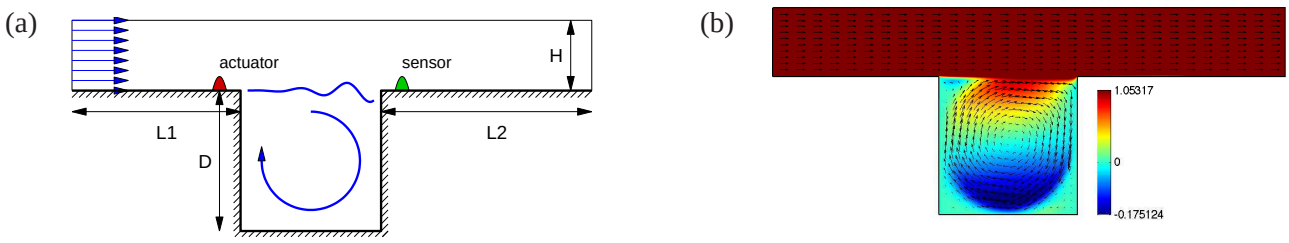

FIGURE 1 – (a) Squetch of the cavity. (b) Base flow.

The linearized Navier-Stokes equations are discretized with finite elements using P2 (resp. P1) elements for the velocity components $\mathbf{u} = (u\,,\,v)^T$ (resp. the pressure component p). This results in approximately 900 000 degrees of freedom. The discretized problem can be written as :

$$\mathsf{Q}\frac{d\mathsf{X}}{dt} = \mathsf{A}\mathsf{X} + \mathsf{C}c \quad (1)$$

$$m = \mathsf{M}\mathsf{X} \quad (2)$$

where $\mathsf{X} = (\mathbf{u}\,,\,p)^T$, A is the linearized Navier-Stokes operator, C is the control matrix, M is the measurement matrix and Q stands for the weight matrix arising from the finite elements discretization. The use of a Single Input Single Output (SISO) framework imply that C (resp. M) is of dimension (8×1) (resp. (1×8)), c is a scalar control law and m a scalar measure. Note that $\mathsf{X}^T\mathsf{Q}\mathsf{Y}$ represent the energy based scalar product between X and Y.

2.2 Global mode analysis

We consider global modes of the following form :

$$\mathsf{X}(x,y,t) = \tilde{\mathsf{X}}(x,y)e^{\lambda t} \qquad \text{with} \quad \lambda = \sigma + i\,\omega \quad (3)$$

which are solution of the eigenvalue problem $\lambda\mathsf{Q}\tilde{\mathsf{X}} = \mathsf{A}\tilde{\mathsf{X}}$. This equation is solved with a shift-invert Arnoldi algorithm, important care was taken to assess the validity of the modes. The least-stable part of the global spectrum is displayed on figure 2(a), four unstable modes (with positive growth rate $\sigma > 0$) are visible in red. The most unstable global mode is displayed on figure 2(b).

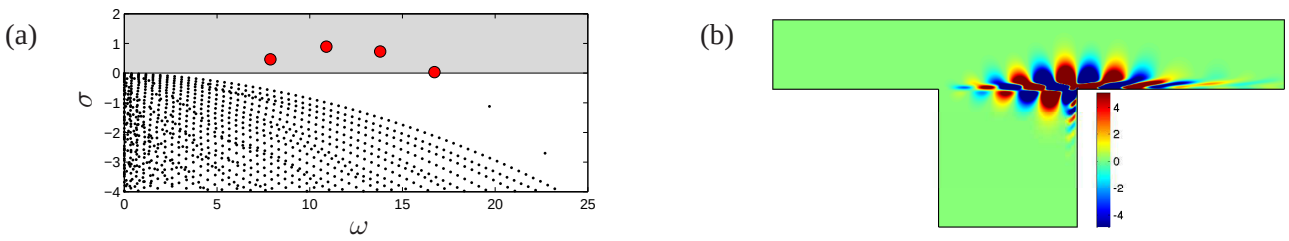

FIGURE 2 – (a) Least-stable part of the global spectrum. Unstable modes are shown in red and stable modes are shown in black. (b) Most unstable global mode (longitudinal velocity).

2.3 Model reduction and LQG control

Because of the high number of dof in our problem, the direct application of the LQG control to the full system is computationnaly not feasible and the size of the system needs to be reduced. This is achieved by a Petrov-Galerkin projection onto the global modes, retaining a reduced set of them. For this projection, we use the adjoint global modes which are solution of the adjoint eigenvalue problem : $\lambda\mathsf{Q}\tilde{\mathsf{X}} = \mathsf{A}^*\tilde{\mathsf{X}}$. Note that we will consider reduced models based only on the four unstable modes. The reduced system can be cast in

the following form :

$$\frac{d\hat{\mathsf{X}}}{dt} = \Lambda\hat{\mathsf{X}} + \hat{\mathsf{C}}c \quad (4)$$

$$\hat{m} = \hat{\mathsf{M}}\hat{\mathsf{X}} \quad (5)$$

where $\hat{\mathsf{X}}$ is the reduced variable of dimension (8×1), Λ is a diagonal (8×8) matrix, $\hat{\mathsf{C}}$ is (8×1) and $\hat{\mathsf{M}}$ is (1×8) ; 8 is the size of the reduced model.

We consider a Linear Quadratic Gaussian (LQG) control strategy where the controller and the estimator are designed separately according to the separation principle. The controller is computed assuming that the variable $\hat{\mathsf{X}}$ is know for all time. It links the control law c and the reduced field according to a linear relation $c = \hat{\mathsf{K}}\hat{\mathsf{X}}$. When the entire state is not known and only a measure of the state is available (so-called partial state control), the estimator yields an approximation $\hat{\mathsf{Y}}$ of the reduced field $\hat{\mathsf{X}}$. In this case, the control law is computed using $c = \hat{\mathsf{K}}\hat{\mathsf{Y}}$ (see details in Bewley and Liu (3)). We remind the reader that the controller and estimator are based on the reduced model (eq. (4)) and not on the full system.

3 Why is the stable subspace important ?

3.1 Full-state control

In a full-state control framework, we assume that we know the reduced state for all time. As shown on figure 3(a), we extract from the entire state X the components on the reduced model $\hat{\mathsf{X}}$. This is directly cast into the controller to obtain the control law c. W is the $(n \times 8)$ matrix which columns contains the unstable adjoint global modes.

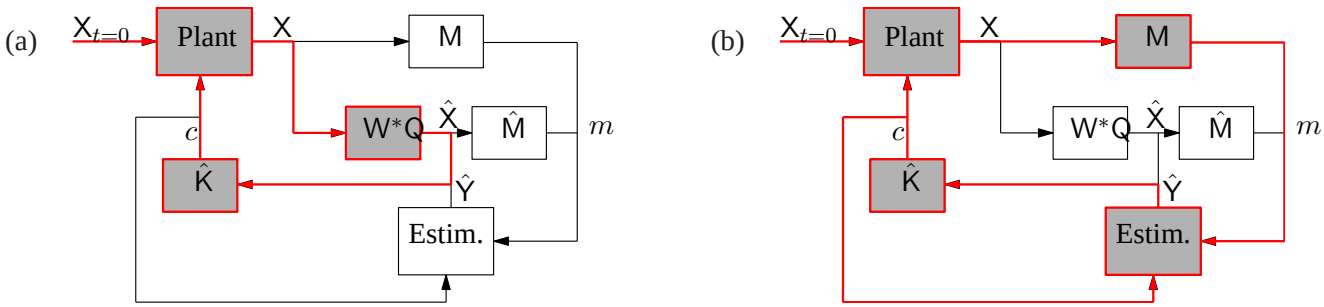

FIGURE 3 – Block diagrams demonstrating (a) full-state information control and (b) partial-state information control. Only the shaded blocks and the red lines are active in each diagram. Estim. stands for Estimator.

On figure 4(a) is shown the evolution of the perturbation kinetic energy (in black) when the control loop is introduced in a linearized Direct Numerical Simulation (DNS). The initial condition is the most unstable mode. Compared to the uncontrolled case (in red) the energy decreases after t=1, showing the success of the controller. More details about this result can be found in (6).

3.2 Partial-state control

In this case (see figure 3(b)), the entire state X is not known and only a measure m is available. This measure is cast into the estimator which will give an approximated field $\hat{\mathsf{Y}}$, used to compute the control law. This is again implemented in a linearized DNS and the perturbation energy is displayed on figure 4(a) in blue. After $t \approx 2$ the energy starts to decrease and then blows up. This shows that this model is not able to stabilize the flow. However, since the full-state control worked properly we conclude that the matter comes from the introduction of the estimator. To analyze the failure of the compensated problem with partial state control, we introduce the notion of full-state measurement control .

3.3 Full-state measurement control

We first recall that, since the estimator is based on the reduced model, the full measure is not the appropriate quantity to introduce in the estimator, the proper quantity being the measure arising from the modes composing the reduced model (so-called *reduced measure* $\hat{m}$ in eq. (5)). This statement is verified using the full-measurement control strategy where the reduced measure $\hat{m}$ is considered as the input of the estimator instead of the full measure m (see figure 5). The results in the linearized DNS are shown in green on figure

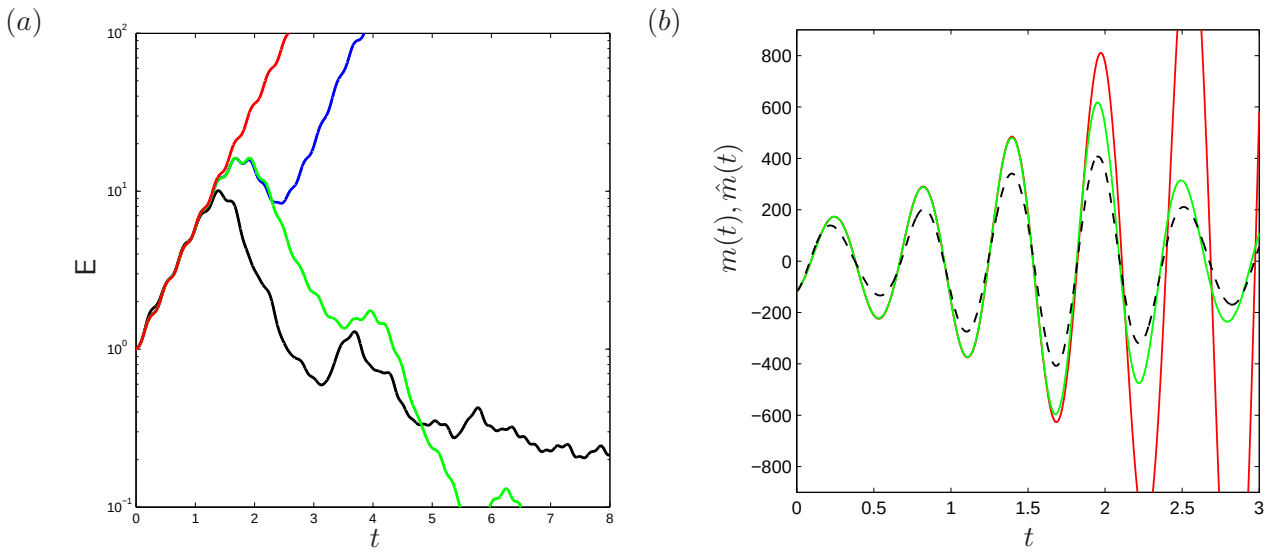

FIGURE 4 – (a) Perturbation kinetic energy E as a function of time. (red) uncontrolled case, (blue) partial-state information control, (green) full-state measurement control, and (black) full-state information control. (b) Measurement as a function of time. Total measure m (red line) for the uncontrolled case, total measure m (green line) and reduced measure $\hat{m}$ (black dashed line) using full-state measurement control.

4(a). From $t \approx 2$ the energy decreases, which demonstrates that when the appropriate measure is given to the estimator, the controller is able to stabilize the flow. In figure 4(b), the measure of the entire state, so-called total measure (in green) is compared to the reduced measure (black dashed line). While the total measure is superposed to the uncontrolled case (in red) until $t > 1.7$, the reduced measure is affected by the control from the beginning. Thus, there is a measure coming from the stable modes to compensate the loss on the reduced measure and reconstitute the full measure. This quantity needs to be captured by the reduced model. Note that, since the initial condition is the most unstable global mode, which is dynamically independent of the stable subspace, the stable modes are all triggered by the actuation.

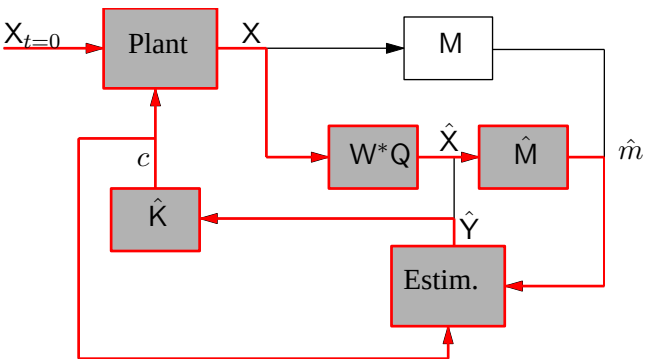

FIGURE 5 – Block diagram demonstrating the full-measurement information control. Only the shaded blocks and the red lines are active. Estim. stands for Estimator.

We are now able to describe the sequence of events leading to the instability of the partial-state simulation : the actuator acts on the complete flow and thus triggers not only the unstable modes but also stable modes. These stable modes (not taken into account in the estimator) corrupt the measurement signal leading to a wrong estimation which in turns contaminates the control action. This is corroborated by Ehrenstein and Gallaire (5) where the action of the actuator is restricted to the modes comprising the reduced model. Doing so, structures out of the model are not excited and the control is successful. From now on, we can state that modeling the stable subspace is of pivotal importance, in particular, to capture the structures triggered by the control and measured by the sensor, i.e. the input-output behavior.

4 A criterion to select stable global modes

Since the input-output behavior of the stable subspace has to be captured, the simplest idea is to include in the reduced model as many global modes as necessary. This solution has been tested, including a few thousands stable modes ranked by decreasing growth rate but did not give any satisfying results. On top of that, the computation of an arbitrary number of stable modes is not possible due to the non-normality of the Navier-Stokes operator. Another idea is to only include the global modes which are important for the input-output behavior of the stable subspace. In the following, we introduce a criterion to select such modes.
For simplicity and without loss of generality, we consider a particular control law in the form

$$c(t) = \cos(\omega t) \tag{6}$$

where ω is a given (real) frequency. We then determine the forced response of the dynamical system expressed in terms of the measurement and omitting the initial transient response. We obtain

$$\hat{m} = \frac{1}{2}\hat{\mathsf{M}}\left(i\omega\mathsf{I} - \Lambda\right)^{-1}\hat{\mathsf{C}}\exp(i\omega t) + \frac{1}{2}\hat{\mathsf{M}}\left(-i\omega\mathsf{I} - \Lambda\right)^{-1}\hat{\mathsf{C}}\exp(-i\omega t)$$

from which we may extract the contribution of the i-th global mode as

$$\hat{m}_i = \frac{1}{2}\frac{\hat{\mathsf{M}}_i\hat{\mathsf{C}}_i}{i\omega - \Lambda_i}\exp(i\omega t) + \frac{1}{2}\frac{\hat{\mathsf{M}}_i\hat{\mathsf{C}}_i}{-i\omega - \Lambda_i}\exp(-i\omega t).$$

The forced response is the sum of waves of frequency ω. Maximizing over all forcing frequencies ω, we can see that the contribution of the i-th eigenmode is proportional to the quantity

$$\Gamma_i = \frac{\left|\hat{\mathsf{M}}_i\right|\left|\hat{\mathsf{C}}_i\right|}{|\mathrm{Re}(\Lambda_i)|}. \tag{7}$$

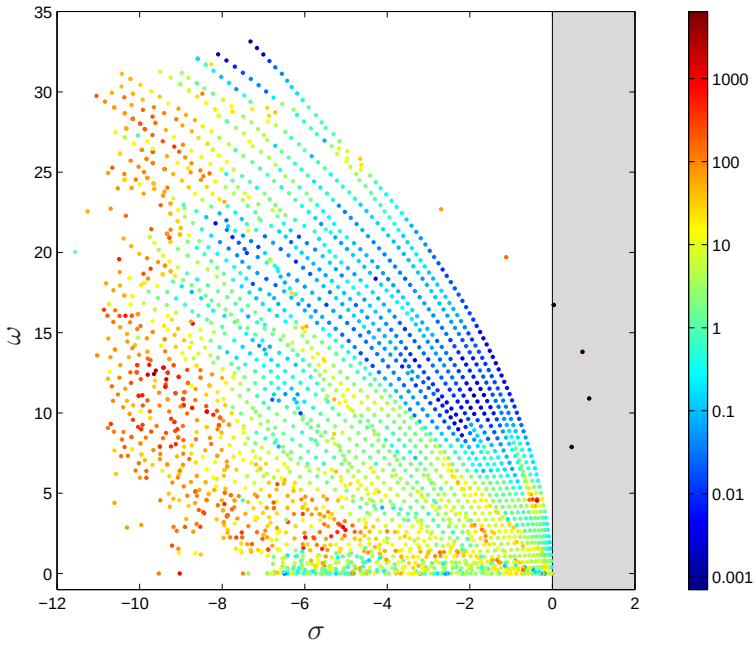

FIGURE 6 – Global spectrum of flow over an open square cavity at $Re = 7500$ color-coded by Γ_i, a measure of each global mode's contribution to the input-output relation.

This criterion takes into account three different physical variables to quantify if a stable global mode should or should not be retained in the reduced-order model basis of the estimator : (a) the measurement coefficient $\hat{\mathsf{M}}_i$, which is closely related to the observability of the respective global mode, (b) the control coefficient $\hat{\mathsf{C}}_i$, a measure of controllability of the associated global mode, and (c) the decay rate $|\Re(\Lambda_i)|$ of the global mode. In short, the criterion based on Γ_i selects global modes that are observable, controllable and weakly damped.
For our present case, we observe that Γ_i does not decrease with the decay rate $|\Re(\Lambda_i)|$ of the global modes. In Figure 6, which shows the global spectrum in the (σ, ω)-plane, the coloring of the eigenvalues corresponds to

Γ_i. The eigenvalues that appear in warm (cold) colors display high (low) values of Γ; a logarithmic color map has been used here and Γ_i is meaningful only for damped eigenmodes. We observe that the highest values of Γ appear for strongly damped eigenmodes ; moreover, the number of eigenmodes with high values of Γ appears to increase as the damping increases since nearly all yellow and red colored eigenvalues appear on the left side of the figure. Since there is no theoretical argument for an eventual decrease of Γ as the damping rate increases, we conclude that the damping rate is a poor and inappropriate measure for the judicious inclusion of global modes into the reduced-order model or for the truncation of the expansion basis.
The disadvantageous behavior of the composite coefficient Γ can be traced back to the controllability coefficient $\hat{C}_i$ which increases with the damping rate. This property is a consequence of the non-normality of the Navier-Stokes operator and is the limiting factor for the computation of stable global modes. Since the relevant global modes cannot be computed, we conclude that global modes cannot be successfully used as a projection basis for closed-loop control. Note that non-normality of the damped global mode basis is linked to physical properties of the base flow and has also been identified by Lauga and Bewley (8) as the reason for loss of stabilizability in their study of the controlled linear Ginzburg-Landau model.

5 Conclusions

In this work, the closed-loop control of a cavity flow using a reduced model based on global modes was investigated with partial-state information. It was found that the compensated problem was always unstable whatever the number of selected global modes. This stems from the lack of information of the reduced order model about the stable subspace. More specifically, the relevant quantity of the stable subspace to be captured was identified as the input-output behavior. A criterion was derived in order to select such stable global modes. Unfortunately, these modes were found to be highly damped and thus impossible to compute due to the non-normality of the Navier-Stokes operator. We conclude that reduced order models based on global modes are not suitable for closed-loop control.
We propose to use other basis for the reduction of the stable subspace, such as Balanced Proper Orthogonal Decomposition modes (see Rowley (9)). This basis which is very efficient in capturing the input-output behavior of stable systems was able to suppress the instabilities for partial state control in the present configuration (see Barbagallo et al. (10)).

Références

[1] Rossiter J. Wind tunnel experiments of the flow over rectangular cavities at subsonic and transonic speeds. Aeronautical Research Council, Report and Memorandum, 3438, 1964.

[2] Tam C. and Block P. On the tones and pressure oscillations induced by flow over rectangular cavities. J. Fluid Mech., 89, 373–399, 1978.

[3] Bewley T. and Liu S. Optimal and robust control and estimation of linear paths to transition. J. Fluid Mech., 365, 305–349, 1998.

[4] Åkervik E., Hœpffner J., Ehrenstein U., and Henningson D. S. Optimal growth, model reduction and control in a separated boundary-layer flow using global modes. J. Fluid Mech., 579, 305–314, 2007.

[5] Ehrenstein U. and Gallaire F. Optimal perturbations and low-frequency oscillations in a separated boundary-layer flow. AIAA paper 2008-4232, 5th AIAA Theoretical Fluid Mechanics Conference, 2008.

[6] Barbagallo A., Sipp D., Jacquin L., and Schmid P. J. Control of an incompressible cavity flow using a reduced model based on global modes. AIAA paper 2008-3904, 5th AIAA Theoretical Fluid Mechanics Conference, 2008.

[7] Sipp D. and Lebedev A. Global stability of base and mean flows : a general approach and its applications to cylinder and open cavity flows. J. Fluid Mech., 593, 333–358, 2007.

[8] Lauga E. and Bewley T. The decay of stabilizability with Reynolds number in a linear model of spatially developing flows. Proc. R. Soc. Lond. A, 459, 2077–2095, 2003.

[9] Rowley C. Model reduction for fluids using balanced proper orthogonal decomposition. Int. J. Bifurc. Chaos, 15, 997–1013, 2005.

[10] Barbagallo A., Sipp D., and Schmid P. J. Closed-loop control of an open cavity flow using reduced-order models. submitted to J. Fluid Mech.