HAL
open science

Optimal Location of Thyristor-Controlled Series Compensator for Optimal Power Flows

Fatiha Lakdja, Djaffar Ould Abdeslam, Fatima Zohra Gherbi

To cite this version:

Fatiha Lakdja, Djaffar Ould Abdeslam, Fatima Zohra Gherbi. Optimal Location of Thyristor-Controlled Series Compensator for Optimal Power Flows. International Review on Modelling and Simulations (I.RE.MO.S.), 2008, 6 (2), pp.465-472. hal-00985444

HAL Id: hal-00985444

https://hal.science/hal-00985444v1

Submitted on 29 Apr 2014

HAL is a multi-disciplinary open access archive for the deposit and dissemination of scientific research documents, whether they are published or not. The documents may come from teaching and research institutions in France or abroad, or from public or private research centers.

L'archive ouverte pluridisciplinaire **HAL**, est destinée au dépôt et à la diffusion de documents scientifiques de niveau recherche, publiés ou non, émanant des établissements d'enseignement et de recherche français ou étrangers, des laboratoires publics ou privés.

International Review on Modelling and Simulations (I.RE.MO.S.), Vol. xx, n. x
June 2008

Optimal Location of Thyristor-Controlled Series Compensator for Optimal Power Flows

F. Lakdja[1], D. Ould Abdeslam[2], F. Z. Gherbi[1]

Abstract – *This paper focuses on the developing and applying an optimization method to determine what would be the optimal configuration of the TCSC controller (Thyristor-Controlled Series Capacitor) into the grid for a stationary operating regime. The ultimate purpose is to evaluate and compare the cost values of the electrical power system with and without TCSC controller. Four strategies for optimal placement of the TCSC in the transmission line are presented and discussed. We use a Newton-Raphson algorithm as an optimized method. The effectiveness of the algorithms has been demonstrated by a numerical examples applied to an IEEE test grid with 26 buses.*

Keywords: *Optimal Power Flow (OPF), FACTS, TCSC, Newton-Raphson algorithm.*

Nomenclature

FACTS	Flexible AC Transmission System
OPF	Optimal Power Flow
TCSC	Thyristor-Controlled Series Capacitor
X_L	Inductance
X_C	Capacitor
E, V	Voltages
I	Current
P_G	Active power
Q_G	Reactive power
δ	Voltage phase
B_e	Susceptance
k, m	Buses
α	Firing angle
θ	Phase of terminal voltage
F (.)	Function cost
a_1, b_1, c_1, B_{ij}	Coefficients
μ_{ij}	Loss coefficients
ng	number of generator buses
P_i	Real power output of generator i
λ	Cost function

I. Introduction

The exploitation of a power system is subject to some basic rules. First, we must ensure permanent equality between production and consumption in order to maintain the frequency at a constant value. This process is performed automatically using primary and secondary regulators of power plants production. On the other hand the distribution of active power between generators and loads obey the Kirchhoff's laws; transits follow the paths of least impedance regardless of the transmission capacity of the lines and stability problems. To this is added the reactive power, which can be produced or consumed by the lines themselves, which alters the charge state of the lines and the voltage level. Network operators have a small number of solutions to control the power flow. These are mainly:

- The realization of production by changing the power generators instructions. But this solution is subject to certain constraints in a deregulated environment [1].
- The triggering of lines in order to influence the network topology. But this solution is usually done only in case of contingencies [2].
- The artificial modification of the characteristics of transmission lines using devices such as FACTS (Flexible AC Transmission System) [3], [4].

The solutions based on FACTS devices have become increasingly important in controlling the power transit. The FACTS technology uses new power-electronic controllers for both active and reactive power on selected lines for increasing the use of their capacity [5], [6]. FACTS solutions enable network operators to increase the capacity of the existing park, while maintaining or improving the operating margins necessary for grid stability. This increases the quantity of energy delivered to load centers with minimal impact on the environment. The implementation is fast and the capital investments are reduced compared to other solutions (construction of new transmission lines or new means of production). However, the optimal location of FACTS devices in the line is an important issue. Many researches have been carried to determine optimal locations of these devices in an electrical network [7]-[12]. They differ mainly from each other by:

- The operating conditions for which the devices are installed.
- The models adopted for FACTS devices.

Manuscript received and revised May 2008, accepted June 2008
Copyright © 2008 Praise Worthy Prize S.r.l. - All rights reserved

- Methods and optimization criteria.
- Size and network topology used for simulations.

Our goal, in this work, is to find optimal locations of FACTS devices. We are interested specifically in the series compensation. We have chosen as the series FACTS devices: the TCSC (Thyristor-Controlled Series Capacitor). The methodology adopted is to find the optimal configuration from one or more solutions (depending on the algorithm used) and try to improve over successive iterations. The evaluation of the quality of the solution is done by calculating the traditional powers distribution. According to the modeling of TCSC, the device changes the nodal admittance matrix of the grid. It is from the modified elements that load flow is calculated. We use the variable coefficients optimization method, i.e. variable losses.

Our work is organized as follow: Section II presents the concepts of FACT and TCSC. Section III presents the principle of the TCSC controller in power flow optimization. We develop in section IV the strategies adopted for the best placement of the TCSC controller in the power grid. Section V shows the different simulation results. Section VI summarizes the results and concludes the paper.

II. FACTS and TCSC concepts

The FACTS (Flexible Ac Transmission System) is a concept based on power-electronic controllers, which enhance the value of transmission networks by increasing the use of their capacity. As these controllers operate very quickly, they enlarge the safe operating limits of a transmission system without risking stability [5].

The TCSC (Thyristor-Controlled Series Capacitor) is a type of FACTS that can modify the series capacitive reactance of the transmission line. Figure 1 shows the simplified diagram of TCSC.

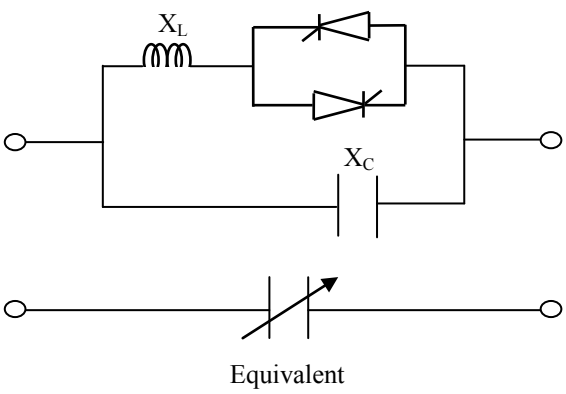

Fig. 1 Simple diagram of TCSC

The TCSC is composed of an inductance X_L in series with a thyristor dimmer, all in parallel with a capacitor X_C.

If the thyristors are locked, the TCSC has fixed impedance which corresponds to that of capacitor. If the thyristors are controlled as an electronic switch at full conduction, the TCSC impedance is equal to the equivalent impedance of the capacitor in parallel with the inductance.

In practical implementation of TCSC (Fig. 2), there are several series compensators. For economic reasons, we use two mixed assemblies: one consisting of several TCSCs in series and another of several conventional compensators [13].

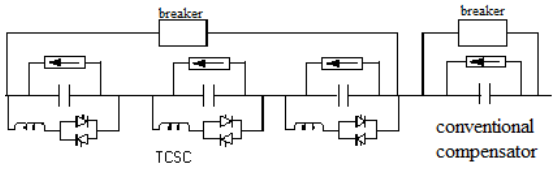

Fig. 2 Practical implementation of TCSC

The advantage of connecting multiple TCSCs in series is that the total effective reactance gives rise to a wider range of values. The restricted control interval in the case of a system with a single TCSC controller is widening with additional TCSC (Fig. 3) [14].

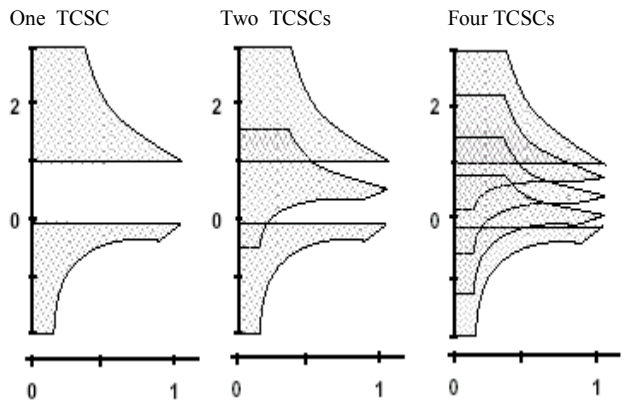

Fig. 3 Characteristics of X_{TCSC} -vs-I in function with TCSCs in series

III. Power Flow solutions including TCSC controllers

III.1. Power flow concepts

To solve the problem of energy distribution, it is necessary to have available a mathematical model of the system. The system consists mainly of: power generator, consumer of electricity and power grids. Generators and consumers are buses. Lines connect the buses.

Solving the problem of power flow can be treated as the resolution of the system under certain constraints related to the nodal voltage, the active and reactive power generated and consumed [15].

This resolution allows us to determine the nodal

Copyright © 2008 Praise Worthy Prize S.r.l. - All rights reserved

voltages, phase angles, the power injected at various buses and power losses during transit in the lines. In particular, knowing the energy demand of consumers we can determine even the power to be generated by the production units. We can consider the power flow problem under several points of view; in the case of our work it concerns the resolution of the static flow problem under constraints type equality and inequality. The static assumption requires us to keep the values of the power generated and consumed constant during a specified period of time.

To solve the problem of load balancing, it is natural to consider the mesh rule or the nodal rule. The nodal law is more common, because the matrix of admittances “Y” to the buses is easier to establish, in a network with "n" buses. The equations linking the voltages “E” and currents “I” injected into various buses represent a linear system of order n. In practice, we associate to each bus, four variables: the active power, the reactive power, the modulus and argument of the voltage. However, there are three types of buses in the power grid:

1- Producers buses: These buses are associated with power plants where the active power "P_G" and the voltage module "E" are known. We must find the reactive power "Q_G" and the voltage phase "δ" which are unknown.

2- Consumer buses: These buses directly associated to the loads where "P_{ch}" and "Q_{ch}" are known, therefore remains to be determined "E" and "δ".

3- Balance sheet bus: Usually associated with the most powerful plant of the network and is characterized by the voltage module "E". Its phase "δ" is often taken as the origin of the phases and it is set equal to zero. Therefore remains to find the active and reactive powers "P_G" and "Q_G" respectively.

We have to keep varying the active power production of one power plant (usually the most powerful plant) to satisfy this equality that defines:

"Production" = "Consumption" + "Losses"

III.2. Iterative algorithms for Power flow problem

The nonlinear equations that define the power distribution problem force us to use iterative algorithms. The most used iterative algorithms are:

- Gauss-Seidel: The first to be used historically, but much slower in computational speed and convergence when applied to the network with realistic size [16].
- Newton-Raphson: it has a robust convergence and a reduced number of iterations, but it is hard to implement [17].
- Fast Decoupled Load Flow (FDLF): it is a variant of Newton-Raphson algorithm [18]. It is simple to implement but its characteristic of convergence is poor.

These three algorithms have in common the nodal formulation of the nonlinear equations. We can find two versions for each algorithm: the first one is based on the polar coordinates and the second one on the Cartesian coordinates. We adopt for our work the Newton-Raphson algorithm based on Cartesian coordinates. This choice is motivated by the speed and the robustness of the method.

The general diagram of the iterative computation in the power flow management is shown on figure 4.

III.3. TCSC in power flow concept

TCSC is used to optimize power flow for varying loading and network configurations [19, 20].
Figure 5 illustrates the model of TCSC in power flow concept.

The TCSC controller is placed between two buses *k* and *m*. The equivalent susceptance B_e of the TCSC is function of the firing angle α, the inductance X_L and the capacitor X_C. The susceptance is computed as follow:

$$B_e = \frac{1}{X_C} - \frac{(2(\pi-\alpha)+\sin 2\alpha)}{\pi X_L} \quad (1)$$

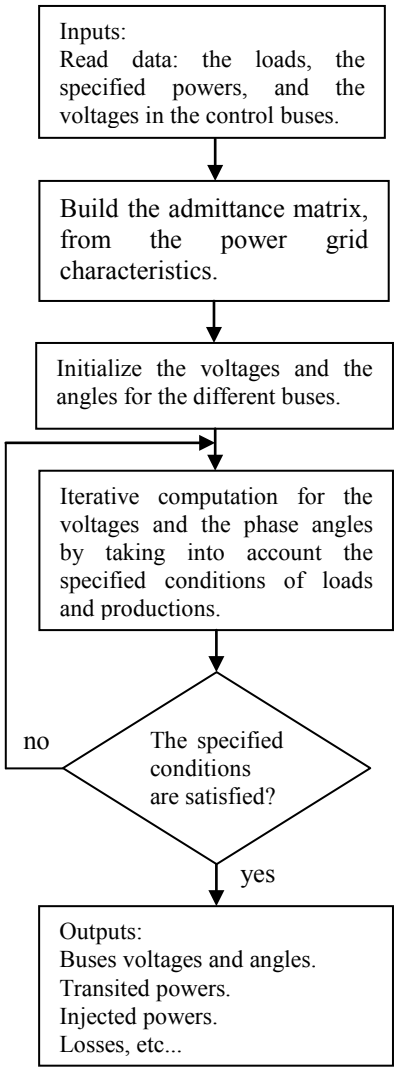

Fig. 4 Iterative computation in the power flow management

Copyright © 2008 Praise Worthy Prize S.r.l. - All rights reserved

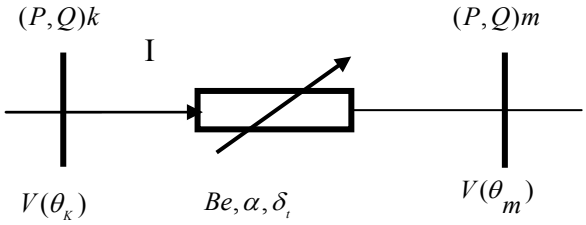

Fig. 5 Model of TCSC in a power flow

$(P,Q)_k$ are the injected active and reactive powers at bus k, $(P,Q)_m$ are the injected active and reactive powers at bus m. The different powers are computed by the following equations:

$$P = -V_k V_m B_e \sin(\theta_k - \theta_m)$$

$$Q_k = V_k V_m B_e \cos(\theta_k - \theta_m) - V_k^2 B_e$$

$$Q_m = V_k V_m B_e \cos(\theta_k - \theta_m) - V_m^2 B_e$$

Where:

$$\theta_k = \theta_m + \delta_t$$

III.4. Economic dispatch

Producers of electrical energy determine experimentally the curves giving the cost of production of each group according to the power they sell. The function associated with these curves is a polynomial of degree "n". In practice, most often it is presented as a polynomial of second degree [21].

$$F(P_{G1}) = a_1 P_{G1}^2 + b_1 P_{G1} + c_1 \qquad (2)$$

The function F (P_{G1}) is known only in discrete form, that is to say, from a number of points. For this reason it makes use of interpolation methods to determine the coefficients a_1, b_1, c_1 that are specific to each production unit.

Minimizing the total cost function of power generation is a task which is presented as follows:

$$Min\left\{F = \sum_{i=1}^{n} F_i(P_{Gi})\right\} \qquad (3)$$

Power generation limit:

$$\sum_{i=1}^{ng} P_{Gi} - P_{ch} - P_L = 0 \qquad (4)$$

$$P_{Gi\min} \le P_{Gi} \le P_{Gi\max} \qquad (5)$$

$$\sum_{i=1}^{ng} Q_{Gi} - Q_{ch} - Q_L = 0 \qquad (6)$$

$$Q_{Gi\min} \le Q_{Gi} \le Q_{Gi\max} \qquad (7)$$

Bus voltage limit:

$$V_{i\min} \le V_i \le V_{i\max} \qquad (8)$$

$$|\delta_{ij}| \le \delta_{ij,\max} \qquad (9)$$

TCSC reactance limit:

$$Xc_{min} \le Xc \le Xc_{max}$$

Solve this problem with all these constraints is not feasible for a large network with multiple buses and generally interconnection lines, so it is necessary to simplify the problem.

We have omitted the constraints (8) and (9), assuming that all buses have roughly the same voltage module and phase. Constraints (6) and (7) can be ignored, since the reactive power does not have a significant impact on the cost function.

The term transmission losses according to the power generated is given by [22]:

$$P_L = \sum_{i=1}^{ng} \sum_{j=1}^{ng} P_{Gi} B_{ij} P_{Gj} \qquad (10)$$

Where B_{ij} are the B coefficients and ng is the number of generator buses.

The cost of generator i (in bus k or m) can be computed in \$/hr (dollar per hour) with this expression:

$$C_i = (a_i + b_i P_i + g_i P_i^2 + x_i P_i^3) * fuel \cos t$$

Where P_i is the real power output of generator i, and a, b, g and x are the cost coefficients. The formulation of the total real power losses P_L in the transmission line is given by the *Kron's* loss formula:

$$P_L = \sum_{i=1}^{ng} \sum_{j=1}^{ng} P_i \mu_{ij} P_j + \sum_{i=1}^{ng} \mu_0 P_i + \mu_{00}$$

Where μ_{ij} the loss coefficients and ng is the number of generator buses.

IV. Strategy for optimal placement of the TCSC in the transmission line

We want to get closer to the real case. For this, we propose the following steps:

1- Analyze the grid to be studied;
2- Calculate the power flow and the optimization;
3- Classify the lines of the studied grid in decreasing order;
4- Deduct and display a list of the longest lines, for a percentage of 40%;
5- Then start the various options proposed in this paper: case study of TCSC controller in the power grid;

The fourth first steps are the common constraints of the TCSC insertion in the grid. For the fifth step, we propose four different options: a) Series control with automatic position, b) Series control with automatic angle adjustment, c) Random control with automatic position, d) Random control with automatic angle adjustment.

We chose to use two TCSC to ensure a wider interval of control.

Copyright © 2008 Praise Worthy Prize S.r.l. - All rights reserved

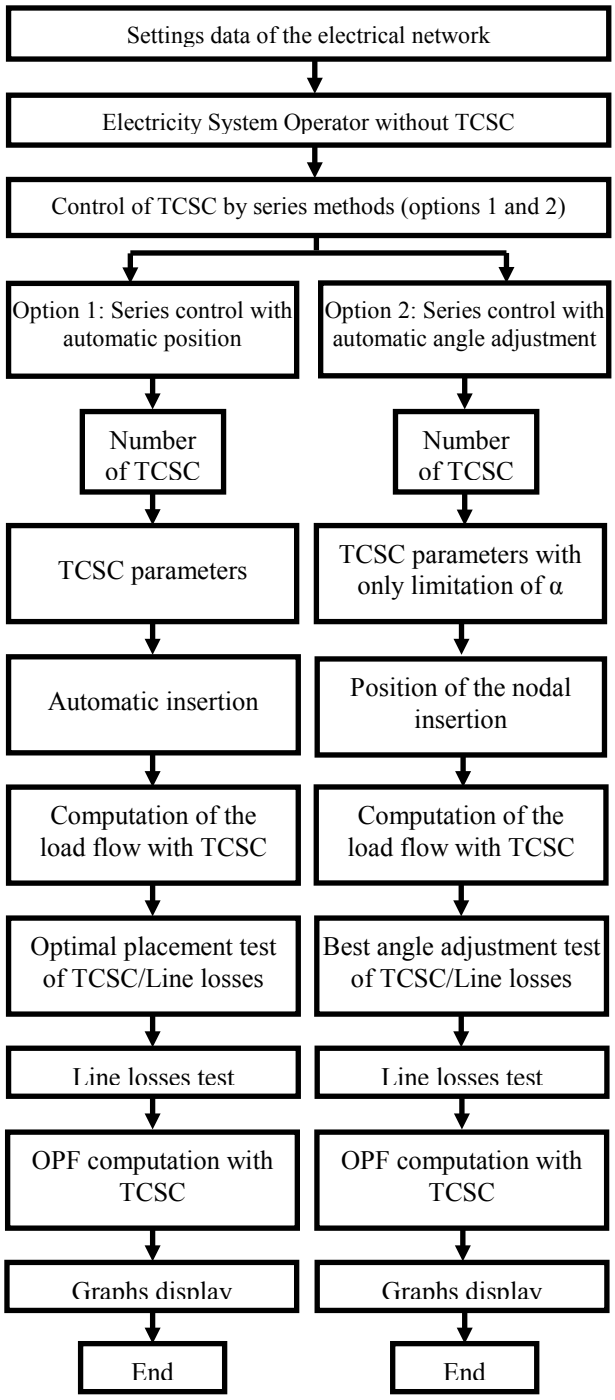

Fig.6 Organization chart of the two algorithms of option 1 and option 2

IV.1. Option 1: Series control with automatic position

In this option, the settings of two controllers $TCSC_1$ and $TCSC_2$ are fixed. More precisely, we have a choice and the ability to modify the settings of X_L, X_C, α_{min}, α_{max} and the firing angle α. The algorithm must calculate, sort and locate and then display the best location of the two TCSC in the same line.

IV.2. Option 2: Series control with automatic angle adjustment:

For this option, the two controllers $TCSC_1$ and $TCSC_2$ will be directly inserted in the line. The location should be chosen according to the list of longest lines displayed by the program. We choose the settings X_L, X_C, α_{min}, α_{max} of the TCSC controllers. The algorithm must adjust, locate and then sort and display the best common firing angle of the two TCSC controllers.

IV.3. Option 3: Random control with automatic position

We follow the same steps as in option 1 for the introduction of TCSC parameters. We fix two different values for the firing angles (α_1 and α_2). The algorithm will place the TCSC in two different lines by choosing the best location.

IV.4. Option 4: Random control with automatic angle adjustment

In this option, the two TCSC are placed in two different lines after introducing the parameters of both devices. The two different firing angles are obtained by the algorithm.

The organization chart of the two algorithms of option 1 and option 2 is illustrated in figure 6. By the same way we can illustrate the algorithms of option 3 and option 4 by replacing series method with the random method.

V. Simulation results

The algorithms will be applied in an IEEE test grid with 26 buses. The architecture is shown on Appendix.

The grid contains:

- 26 buses.
- 6 buses of production (generators) and consumption.
- 3 buses of production (compensators) and consumption.
- 45 lines.

V.1. Options 1

Two TCSC ($TCSC_1$ and $TCSC_2$) controllers are used in series with the following settings:

Power base: Sb =100 MVA

Frequency: 50 Hz

Inductive reactance: X_{L1} = 0.003 p.u and X_{L2} = 0.002 p.u

Capacitive reactance: X_{C1} = 0.001 p.u and X_{C2} = 0.001 p.u

The firing angle is capacitive effect with the angles limits: $\alpha_{1min} = 142^0$ and $\alpha_{1max} = 180^0$ and the adjustment angles: $\alpha_1 = \alpha_2 = 143^0$.

Figure 7 presents the results obtained with the different options for total losses, total cost and minimization factor of the cost function λ.

Copyright © 2008 Praise Worthy Prize S.r.l. - All rights reserved

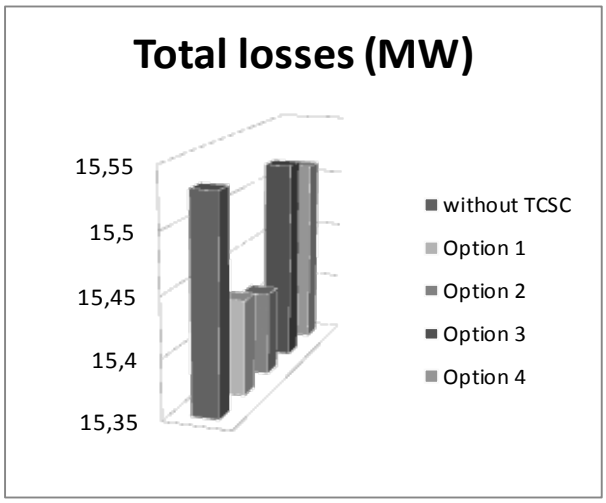

(a) Total losses

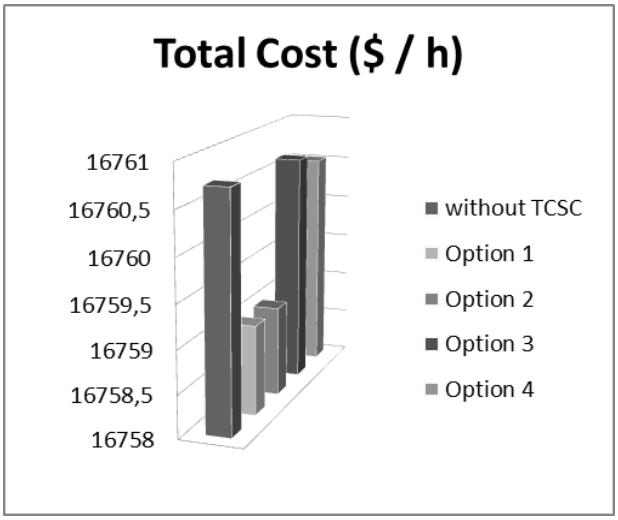

(b) Total cost

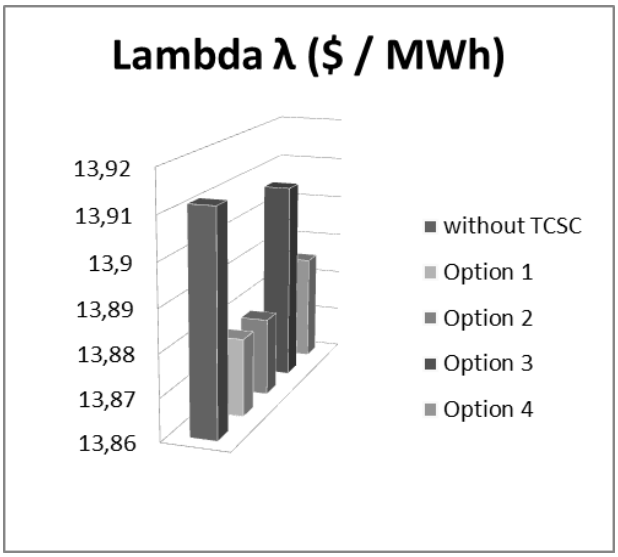

(c) Factor Lambda λ

Fig. 7 total losses, total cost and minimization factor of the cost function λ

For the option 1, the total losses of the system have decreased compared to the initial state, the same remark for the cost and the factor λ. This decrease is obtained for the optimal location detected by the program that is the line between the buses 16 and 17.

Table I illustrates the results of the optimum active powers for the 6 production buses. We notice a decrease in production due to the good localization of the two TCSC.

V.2. Options 2

The two TCSC ($TCSC_1$ and $TCSC_2$) will be inserted in the same line (16-17) and the program will adjust and fixe the best common firing angle of the two controllers. The rest of the settings are the same with the option 1.

TABLE I
THE OPTIMUM ACTIVE POWERS AND THE BEST PLACEMENT OF TCSCS WITH THE OPTION 1

optimum active power (Mw)	without TCSC	with TCSC1 and TCSC2 (automatic)	optimal locations (k-m)
PG1 opt	474.1196	471.4563	(16-17)
PG2 opt	173.7886	171.8988	(16-17)
PG3 opt	190.9515	198.3196	(16-17)
PG4 opt	150.0000	150.0000	(16-17)
PG5 opt	196.7196	194.7332	(16-17)
PG26 opt	103.5772	101.7858	(16-17)

The value of the best common firing angle obtained by the algorithm is $\alpha_1 = \alpha_2 = 174.3^0$. We can see that this angle is different from the angle fixed manually in the option 1 ($\alpha_1 = \alpha_2 = 143^0$).

The results obtained are shown in figure 7. The total losses with the two TCSC are 15.4269 Mw and the total cost is 16758.95 ($ / h). These results are better than those obtained with the option 1. This is due, also, to the choice of the insertion line that is determined by the result of the option 1.

Table II illustrates the results of the optimum active powers for the 6 production buses. The optimal production is decreased due to the good firing angle value of the two TCSC.

TABLE II
THE OPTIMUM ACTIVE POWERS AND THE BEST ANGLE WITH THE OPTION 2

optimum active power (Mw)	without TCSC	with TCSC1 and TCSC2 (automatic)	best angle (degree)
PG1 opt	474.1196	471.2045	174.3
PG2 opt	173.7886	171.7244	174.3
PG3 opt	190.9515	199.0051	174.3
PG4 opt	150.0000	150.0000	174.3
PG5opt	196.7196	194.5449	174.3
PG26 opt	103.5772	101.6185	174.3

Copyright © 2008 Praise Worthy Prize S.r.l. - All rights reserved

V.3. Options 3

The two fixed firing angles, respectively for $TCSC_1$ and $TCSC_2$ are: $\alpha_1 = 143^0$ and $\alpha_2 = 148^0$.

Figure 7 shows the optimal locations obtained by the algorithm for the controllers. $TCSC_1$ is placed between the buses 19 and 24 and $TCSC_2$ is placed between the buses 12 and 14. The total losses, the cost and the factor λ of the system have decreased compared to the initial state.

The optimal power generations of the grid are illustrated in Table III. The power generation is decreased in the production buses 1, 2 and 6.

V.4. Options 4

The two controllers (TCSC1 and TCSC2) are inserted, respectively, in the lines (19-24) and (12-14). The algorithm will adjust and fixe the best common firing angles of the two controllers. We obtain: α1= α2= 143,140.

TABLE III
THE OPTI²MUM ACTIVE POWERS AND THE BEST PLACEMENT OF TCSCS WITH THE OPTION 3

optimum active power (Mw)	without TCSC	with TCSC1 and TCSC2 (automatic)	optimal locations (k-m)
PG1 opt	474.1196	473.3019	(19-24) et (12-14)
PG2 opt	173.7886	172.4158	(19-24) et (12-14)
PG3 opt	190.9515	192.6685	(19-24) et (12-14)
PG4 opt	150.0000	150.0000	(19-24) et (12-14)
PG5 opt	196.7196	196.9766	(19-24) et (12-14)
PG26 opt	103.5772	103.2108	(19-24) et (12-14)

Figure 7 shows the improvements obtained for the total losses, the cost and the factor λ of the system.

The optimal power generations of the grid are illustrated in Table IV. The power generation is decreased in the production buses 1, 2 and 6.

TABLE IV
THE OPTIMUM ACTIVE POWERS AND THE BEST ANGLE WITH THE OPTION 4

optimum active power (Mw)	without TCSC	with TCSC1 and TCSC2 (automatic)	best angle (degree)
PG1 opt	474.1196	472.1598	143.14
PG2 opt	173.7886	172.2365	143.14
PG3 opt	190.9515	196.8370	143.14
PG4opt	150.0000	150.0000	143.14
PG5 opt	196.7196	195.2020	143.14
PG26 opt	103.5772	102.1642	143.14

VI. Conclusion

In this paper, the goal of the optimization is to make best use of network capacity. TCSC devices are placed in the grid to maximize the power supplied to consumers, while observing the security constraints.

The Thyristor-Controlled Series Capacitor (TCSC) has introduced a new state variable in OPF formulations, for unified iterative solutions via Newton method.

In the proposed algorithms, the TCSC is adjusted to achieve an optimal compensation under power constraints.

Compensations are chosen by the algorithms, leading to more economical solutions than in cases where the power is fixed at a specified value.

Newton algorithm has proven to be a very powerful tool, capable of solving the insertion of TCSC controller for better management of the power transit in the network, by using a minimum of steps.

The effectiveness of the algorithms was illustrated by a numerical example of an IEEE test grid with 26 buses. These results clearly show that the algorithms have a flexibility and reliability for convergence.

The extension of the Newton OPF algorithm will be a very powerful tool, capable of solving the insertion of the TCSC controller.

Appendix

Standard IEEE 26-bus test system:

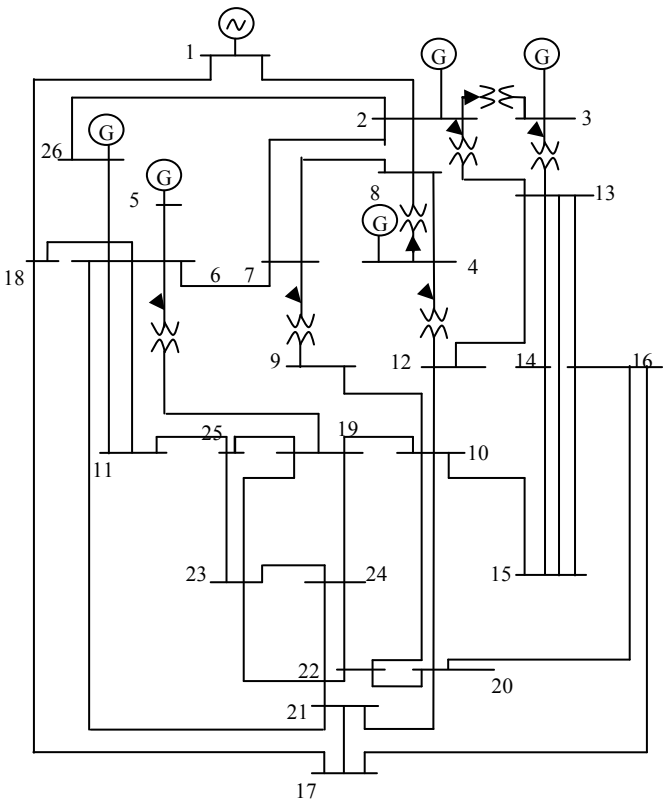

References

[1] M.A. Abdel Moamen, Newton-Raphson TCSC Model for Power Flow Solution of Practical Power Networks, *IEEE Power Engineering Society Summer Meeting, Vol. 3, pp. 1488-1493, Chicago, USA, July 2002.*

Copyright © 2008 Praise Worthy Prize S.r.l. - All rights reserved

[2] Y. Xiao, Y. H. Song, Y. Z. Sun, Power flow control approach to power systems with embedded FACTS devices, *IEEE Trans Power Systems, Vol. 17(4): 943-950, 2002.*

[3] E. Acha, C.R. Fuerte-Esquivel, H. Ambriz-Perez, C. Angeles-Camacho, *FACTS: Modelling and simulation in power networks* (John Wiley & Sons 2004).

[4] M. Basu, Multi-objective optimal power flow with FACTS devices, *Energy Conversion and Management, Vol. 52(2): 903-910, 2011.*

[5] N.G. Hingorani, L. Gyugyi, *Understanding FACTS: concepts and technology of flexible AC transmission systems* (Wiley-IEEE Press 2000).

[6] H. R. Baghaee, M. Mirsalim, A. Kashefi-Kaviani, G. B. Gharehpetian, Optimal Allocation of Multi-Type FACTS Devices to Improve Security and Reduce the Losses and Fault Level Using Multi-Objective Particle Swarm Optimization, *International Review of Electrical Engineering, Vol. 4(6): 1326-1335, 2009.*

[7] M.W. Mustafa, N. Magaji, Optimal location and signal selection of SVC device for damping oscillation, *International Review on Modelling and Simulations, Vol. 2(2): 144-151, 2009.*

[8] M. Senthil Kumar, P. Renuga, Application of Bacterial Foraging Algorithm for Optimal Location of FACTS Devices with Multi-Objective Functions, *International Review of Electrical Engineering, Vol. 6(4): 1905-1915, 2011.*

[9] R.M. Mathur, R.K. Varma, *Thyristor-based FACTS controllers for electrical transmission systems* (IEEE Press 2002).

[10] N. Magaji, M. W. Mustafa, Determination of Best Location of FACTS Devices for Damping Oscillations, *International Review of Electrical Engineering, Vol. 5(3): 1119-1126, 2010.*

[11] L. Boumediene, K. Hartani, Optimal Placement of FACTS Devices in Large Power System Using PSO Method, *International Review of Electrical Engineering, Vol. 6(2): 789-796, 2011.*

[12] A. Sharifi Nasab Anari, R. Ghadiri Anari, Y. Ramezani, Optimal Locating and Sizing of FACTS Devices in Smart Grid Environment, *International Review of Electrical Engineering, Vol. 7(5): 5644-5651, 2012.*

[13] M. Ishimaru, R. Yokoyama, G. Shirai, T. Niimura, Robust thyristor-controlled series capacitor controller design based on linear matrix inequality for a multi-machine power system, *Electrical power and Energy systems, 24(8): 621-629, 2002.*

[14] T. A. Orfanogiannia, flexible software environment for steady-state power flow optimization with series, Ph.D dissertation, ETH Zürich, 2000.

[15] P. Aravindhababu, R. Ashokkumar, A robust decoupled power flow for distribution systems, *Energy Conversion and Management, Vol. 52(4): 1930-193, 2011.*

[16] A. Oudalov , Coordinated power flow control by multiple FACTS devices, *IEEE Power Tech Conference, Vol. 3, Bologna, Italy, June 2003.*

[17] A. Herbig, G. Andersson, C.R. Fuerte-Esquirel, E. Acha, H. Ambriz-Perez, Discussion of A comprehensive Newton-Raphson UPFC model for the quadratic power flow solution of practical power networks, *IEEE Trans Power Systems, Vol. 16(4): 948-949, 2001.*

[18] M. Sailaja Kumari, G. Priyanka, M. Sydulu, Modelling of Thyristor Controlled Series Compensator in Fast Decoupled Load Flow Solution for Power Flow Control, *IEEE International Power and Energy Conference, 150-155, Putra Jaya, Malaysia, November 2006.*

[19] M.A. Abdel-Moamen, P. Narayana, Prasad Power flow control and transmission loss minimization model with TCSC for practical power networks, *IEEE Power Engineering Society General Meeting, Vol. 2, Toronto, Canada, July 2003.*

[20] A.M. Simoes, D.C. Savelli, P.C. Pellanda, N. Martins, P. Apkarian, Robust Design of a TCSC Oscillation Damping Controller in a Weak 500-kV Interconnection Considering Multiple Power Flow Scenarios and External Disturbances, *IEEE Trans Power Systems, Vol. 24(1): 226-236, 2009.*

[21] Y. Wallach, *Calculations and programs for power systems network* (Prentice-Hall 1986).

[22] P. Venkatesh, R. Gnanadass, P.P. Narayana, Comparison and application of evolutionary programming techniques to combined economic emission dispatch with line flow constraints, *IEEE Trans Power Systems, Vol. 18(2): 688-697, 2003.*

Authors' information

[1]Department of Electrical Engineering, University of Saida, Algeria.
[2]Mips Laboratory, University of Haute Alsace, France.

Lakdja Fatiha was born in Oran, Algeria. She received the diploma of Electro technical Engineering degree from the University of Djillali Liabes of Sidi Bel-Abbes, Algeria in 1994, the Master degree, from the University of Oran, Algeria in 2005. The Ph.D. degrees from the University of Sidi Bel-Abbes, Algeria, in 2009. Her research activities are mostly concentrated in power systems, FACTS and renewable energy. She is with the Intelligent Control and Electrical Power System Laboratory (ICEPS), Djillali Liabes University, Sidi-Bel-Abbes, Algeria.

Djaffar Ould Abdeslam received the Ing. degree in Electronics Engineering from the University of Tizi-Ouzou, Algeria, in 2000, M.Sc. degree in Electrical Engineering from the University of Franche-Comté Besançon, France, in 2002 and the Ph.D. degree in electrical engineering from the University of Haute Alsace (UHA), Mulhouse, France, in 2005. Since 2005, he is with the MIPS Laboratory, UHA, as an Associate Professor. His work concerns artificial neural networks, fuzzy logic and advanced control applied to power active filters and power electronics.

Fatima Zohra GHERBI was born in Oran, Algeria. She received the diploma of Electro technical Engineering degree from the University of Science and Technology of Oran, Algeria. The Master degree, from the University of Djillali Liabes of Sidi Bel-Abbes, Algeria in 1992. The PhD degrees from the University of Sidi Bel-Abbes, Algeria, in 2004.
Presently, she is a Professor in the Electrical Engineering Department and a Research Scientist in the ICEPS laboratory (Intelligent Control and Electrical Power Systems), Faculty of engineering, Djilali Liabes University. Her research activities are mostly concentrated in the study of stability issues in ac/dc/ FACTS and Power system analysis.

Copyright © 2008 Praise Worthy Prize S.r.l. - All rights reserved