HAL
open science

PREPARATION OF CELLULOSIC FIBERS FROM SUGARCANE FOR TEXTILE USE

Davina Michel, Bruno Bachelier, Jean-Yves Drean, Omar Harzallah

To cite this version:

Davina Michel, Bruno Bachelier, Jean-Yves Drean, Omar Harzallah. PREPARATION OF CELLULOSIC FIBERS FROM SUGARCANE FOR TEXTILE USE. Hindawi Publishing Corporation, 2013, 2013 (651787), pp.6. 10.1155/2013/651787 . hal-00948569

HAL Id: hal-00948569

https://hal.science/hal-00948569v1

Submitted on 4 Mar 2014

HAL is a multi-disciplinary open access archive for the deposit and dissemination of scientific research documents, whether they are published or not. The documents may come from teaching and research institutions in France or abroad, or from public or private research centers.

L'archive ouverte pluridisciplinaire **HAL**, est destinée au dépôt et à la diffusion de documents scientifiques de niveau recherche, publiés ou non, émanant des établissements d'enseignement et de recherche français ou étrangers, des laboratoires publics ou privés.

Hindawi Publishing Corporation
Conference Papers in Materials Science
Volume 2013, Article ID 651787, 6 pages
http://dx.doi.org/10.1155/2013/651787

Conference Paper

Preparation of Cellulosic Fibers from Sugarcane for Textile Use

Davina Michel,[1] Bruno Bachelier,[2] Jean-Yves Drean,[1] and Omar Harzallah[1]

[1] *Laboratoire de Physique et de Mécanique Textiles-EAC CNRS 7189, Université de Haute Alsace 11 rue Alfred, Werner, 68093 Mulhouse, France*
[2] *Centre de Coopération Internationale en Recherche Agronomique, pour le Développement, Avenue Agropolis, 34398 Montpellier Cedex 5, France*

Correspondence should be addressed to Davina Michel; dav.michel@live.fr

Received 30 April 2013; Accepted 8 September 2013

Academic Editors: R. Fangueiro and H. Hong

This Conference Paper is based on a presentation given by Davina Michel at "International Conference on Natural Fibers—Sustainable Materials for Advanced Applications 2013" held from 9 June 2013 to 11 June 2013 in Guimarães, Portugal.

Copyright © 2013 Davina Michel et al. This is an open access article distributed under the Creative Commons Attribution License, which permits unrestricted use, distribution, and reproduction in any medium, provided the original work is properly cited.

The production of natural fibers is not sufficient to accommodate the textile needs of the growing world population. Therefore, textile research is exploring alternative natural resources to produce fibers. Though typically known for its nutritional use, the sugarcane can also be used for textile production because of its high fiber content. The aim of our study was to extract fibers from sugarcane and to analyze their mechanical behavior. Cane particles were treated with an alkaline solution in order to get cellulosic fibers. Physical and mechanical characterizations were carried out on these fibers: linear density, fineness, tensile properties, and bending rigidity. Their microstructure was analyzed to better understand their behavior. The results showed a strong influence of extraction parameters on the characteristics of fibers. Depending on these parameters, fibers fineness ranged from 8 to 80 tex, length ranged from 19 to 62 mm, and tenacity ranged from 7 and 25 cN/tex.

1. Introduction

Sugarcane (*Saccharum spp.*) is a Poaceae commonly cultivated in tropical areas. In 2011, 1.7 billion tons of sugarcane was produced worldwide [1]. Cane stalk is crushed in sugar mills and alcohol mills, generating 30% of residue left after crushing: bagasse. Nowadays, the valorization of such byproducts is crucial for environmental and sustainable reasons. A transformation of byproducts at low environmental impact is of interest for the creation of new products, for instance, in the textile, composite, or geotextile industries. Small tropical islands, like Martinique in the Caribbean, are seeking new methods to revalorize their byproducts. In 2009, sugarcane production in Martinique was about 220 000 tons; sugarcane is the staple second crop of this French island, after banana. Sixty percent of this production was converted to 86.6 hl of pure alcohol, and the remaining forty percent was converted to 5,600 tons of sugar. Nearly, 70,000 tons of bagasse was produced [2]. In Martinique, bagasse is used as a combustible material to generate energy for the local industries. Depending on the year and on the volume of production, surplus of bagasse is mainly used to feed animals.

Bagasse comes from different parts of the cane stalk comprising the outside rind crushed with the inner pith. It contains 45% of fiber and composed of 45% cellulose, 33% hemicelluloses, and 20% lignin [3]. Long and fine fibers are located in the rind part of the stalk and short fibers in the inside part known as the pith as discussed by Van Dillewijn [4]. As bagasse is a mixture of both parts, the fibers have uneven and uncontrolled lengths. However, because of its high fiber content and particularly because of its cellulose rate, bagasse can be used to produce sustainable fibers. Previous research has shown the chemical extraction of sugarcane fibers from the rind part of the cane stalk [5]. Costa has produced lyocell after an alkaline pulping process on sugarcane bagasse [6]. From different studies on sugarcane, valorizations of bagasse particles have not been characterized for textile application.

The aim of our study was firstly to evaluate the feasibility of extracting fibers from bagasse of sugarcane and secondly

Table 1: Identification of extracted fibers according to the extraction conditions.

Prehydrolysis	Sodium hydroxide concentration	
	1 N	0.1 N
With salty water	BPS-1 N	—
With distilled water	—	BPD-0.1 N
Without prehydrolysis	B-1 N	B-0.1 N

to define the process to convert these fibers into yarn, in a sustainable way.

2. Materials and Methods

2.1. Raw Material Preparation. Samples of bagasse of sugarcane from 12 varieties of *Saccharum ssp.* were collected from the Galion sugar mill in Martinique (a French Caribbean island), in 2011 and 2012. There was no significant difference between these varieties in the chemical composition and morphological structure of the basic components as established by [7, 8]. Wet bagasse was collected at the exit of the sugar mill in Martinique with 50% moisture content. This bagasse was oven-dried at 105°C for 24 hours and then exported by plane to the Laboratory of Textile Physics and Mechanics in Mulhouse (France). The granulometric method was used for sizewise classification of the dry bagasse particles. 25% of particles was collected in the 4 mm mesh of the sieve and used for experimental purposes.

2.2. Extraction of Cellulosic Fibers. Contrary to the kraft process which use high concentrated alkaline solution (at 17% of sodium hydroxide) to obtain cellulosic pulp [9], the extraction was conducted at lower alkaline concentration in order to obtain fine fibers.

Four types of fibers were extracted by chemical processing at different alkaline concentrations, with or without prehydrolysis, in a pilot scale. These parameters were studied to determine their effects on the fiber properties. From different combinations of the parameters of extraction, results were shown for the fibers obtained in conditions showing comparable properties, in this present work.

As pretreatment, prehydrolysis was performed in an autoclave at 130°C for one hour with either distilled or salty water. The whole alkaline extraction was carried out at 130°C for one hour in an autoclave. For each extraction, samples were prepared in groups of five with one gram of untreated dry bagasse. Table 1 presents the identification of the obtained fibers.

To neutralize the pH of fibers, several washing processes were conducted to eliminate the excess of soda in the fibers. After all alkaline extraction, fibers were oven-dried at 105°C for 24 hours, then conditioned at standard lab conditions [10], that is, a temperature of 20°C ± 2°C and a relative humidity of 65% ± 2% for at least 48 hours.

2.3. Fiber Fineness and Fiber Diameter. Tests were conducted to calculate the fiber fineness (linear density). Among each of the four types of fibers extracted, samples of 100 conditioned fibers were chosen randomly to be measured. The length of each fiber was measured using a knitmeter, and its weight was obtained by using an electronic scale. Micrographs of fiber cross sections were taken with a scanning electron microscope (SEM), and the diameter was calculated using Image J software. Twenty samples of each of the four types of fibers were tested.

2.4. Tensile Properties. Tensile tests were conducted on each individual fiber and attached to a cardboard layer by its extremities, to avoid any displacement during the test. MTS 20 M tensile tester was used to find out the tensile load and the elongation of the fibers. From several length classes of fibers, the tests were carried out at a rate of 1 mm/min using a 100 N load cell up to the breakup and 25 mm initial length.

2.5. Bending Rigidity. The fiber flexibility was determined by testing the bending rigidity and hysteresis with KAWABATA (KES FB2-SH). This device bent the entire fiber, placed between a fixed and a mobile grip, according to a constant curvature, which produced an ideal bending behavior as shown in Figure 1. Thirty fibers for each of the four types of fibers were tested with an intergrip distance about 35 mm. To avoid air-flow disturbance, the device was isolated in a PMMA booth.

2.6. Observations by Scanning Electron Microscopy (SEM). SEM was performed with a Hitachi S-2360 N apparatus operated at different voltages from 15 to 20 kV. Fibers were pasted onto a carbon tape to fix them on aluminum stubs. Fibers were coated with gold to make them conductive prior to SEM observation. The longitudinal surface and cross-section of fibers were analyzed and measured by microscopic observation.

3. Results

In the raw material, cellulose, hemicelluloses, and lignin were bonded together with small amounts of extraneous components. Chemical extraction was the most common way to remove the lignin and, consequently, to separate the individual fibers. By alkaline treatment, fiber bundles were isolated however, individual fibers were not reached and remained stuck together. Prior to the study of the extraction of individual fibers, the work focused on the characterization of the extracted fiber bundles as technical fibers.

3.1. Length and Fineness of the Extracted Fiber Bundles. The dimensions of the extracted fiber bundles were determined including fiber length and fiber fineness. Because of the heterogeneous length fiber distribution, the adjusting parameters "Barbe" as the weighted mean and "Hauteur" as the mean of apparent length (commonly used for cotton fibers) have been calculated. Mean results of fiber length, fiber diameter, and fiber fineness are reported in Table 2 (with values of standard deviation).

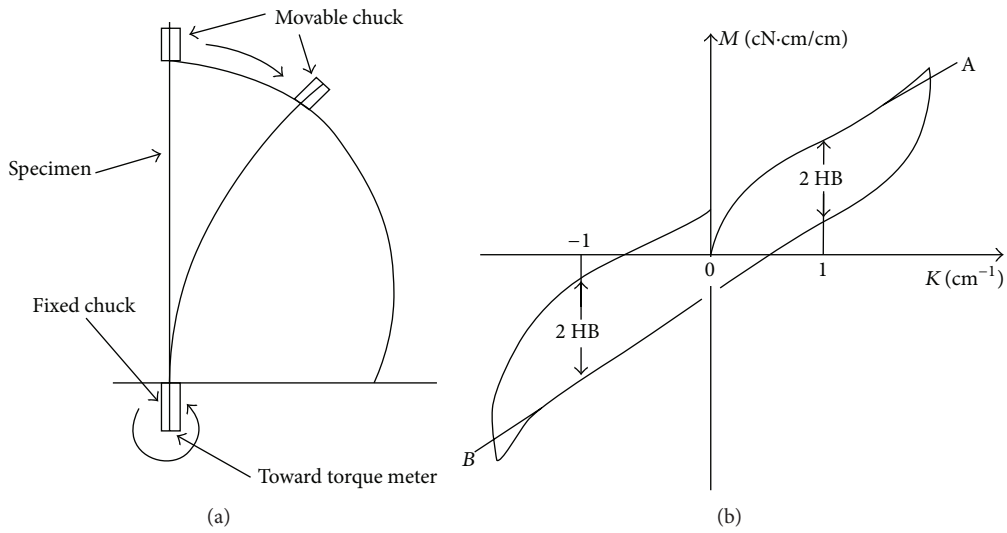

Figure 1: KES-FB2 diagram (a) and bending diagram (b) [11].

Table 2: Mean length and fineness of the four types of extracted fibers.

Bagasse fibers	Mean length (mm)	Barbe (mm)	Hauteur (mm)	Mean diameter (μm)	Fiber fineness (tex)
BPS-1 N	29.8 ± 6.7	35.6	33.3	117 ± 60	32 ± 24
BPD-0.1 N	45.6 ± 16.3	33.9	27.4	189 ± 100	39 ± 28
B-1 N	37.7 ± 9.9	31.6	27.6	181 ± 90	35 ± 21
B-0.1 N	37.6 ± 9.7	34.2	29.6	156 ± 45	49 ± 32

The fiber length selection should be determined around these adjusting fiber lengths. Diagrams of weighted mean are presented in Figure 2.

Fiber bundles obtained present large length dispersion independently of the extraction conditions. Reported measures present high variance coefficient values (over 50% for whole). This dispersion—common to unconventional natural fibers—was due to the heterogeneity of the raw material. There was no evidence on the effect of extraction process on the either fiber length or on the fiber fineness [11].

3.2. Tensile Properties. Mean tenacity values ranged from 7 cN/tex to 22 cN/tex. Results are reported in Table 3. Fiber bundles extracted at highest alkaline concentration had lower tenacity values than those extracted with 0.1 N NaOH solution, especially after a prehydrolysis.

The loss of tenacity is likely dependent on the fiber dimension. Similar trends of the alkaline effects on tenacity properties have been reported by Collier et al. [5], from the rind part of the sugarcane.

3.3. Bending Rigidity. BPS-1 N treatment produced fibers with a bending rigidity similar to agave fibers [12]. At the same alkaline concentration, fibers extracted with prehydrolysis had the lowest bending rigidity as shown in Table 4, with most of the lignin being removed. Also, fiber dimensions such as diameter and fineness influenced the fiber bending behavior.

Table 3: Tensile properties of fiber bundles.

Bagasse fibers	Tenacity (cN/tex)	Extension to break (%)	Energy to break (mJ)
BPS-1 N	7.5 ± 4.4	1.97 ± 1.3	1.2 ± 2
BPD-0.1 N	14 ± 3.8	3.86 ± 1.8	2.9 ± 4.2
B-1 N	11 ± 6.3	4.2 ± 4.3	2.2 ± 3.4
B-0.1 N	22 ± 11.7	3.24 ± 1	4.7 ± 4.4

Table 4: Tenacity of fiber bundles by treatment.

Bagasse fiber bundle	Bending rigidity gf·cm^2/fiber bundle	Bending hysteresis gf·cm/fiber bundle
BPS-1 N	0.027 ± 0.03	0.056 ± 0.03
B-1 N	0.116 ± 0.122	0.165 ± 0.166
BPD-0.1 N	0.190 ± 0.184	0.200 ± 0.151
B-0.1 N	—	—

Fibers extracted at high alkaline concentration after salty prehydrolysis (BPS-0.1 N) presented the lower bending rigidity because of the high lignin content-removed. Bending rigidity and hysteresis values showed the effect of the prehydrolysis on the fiber bending properties. In fact, at the same

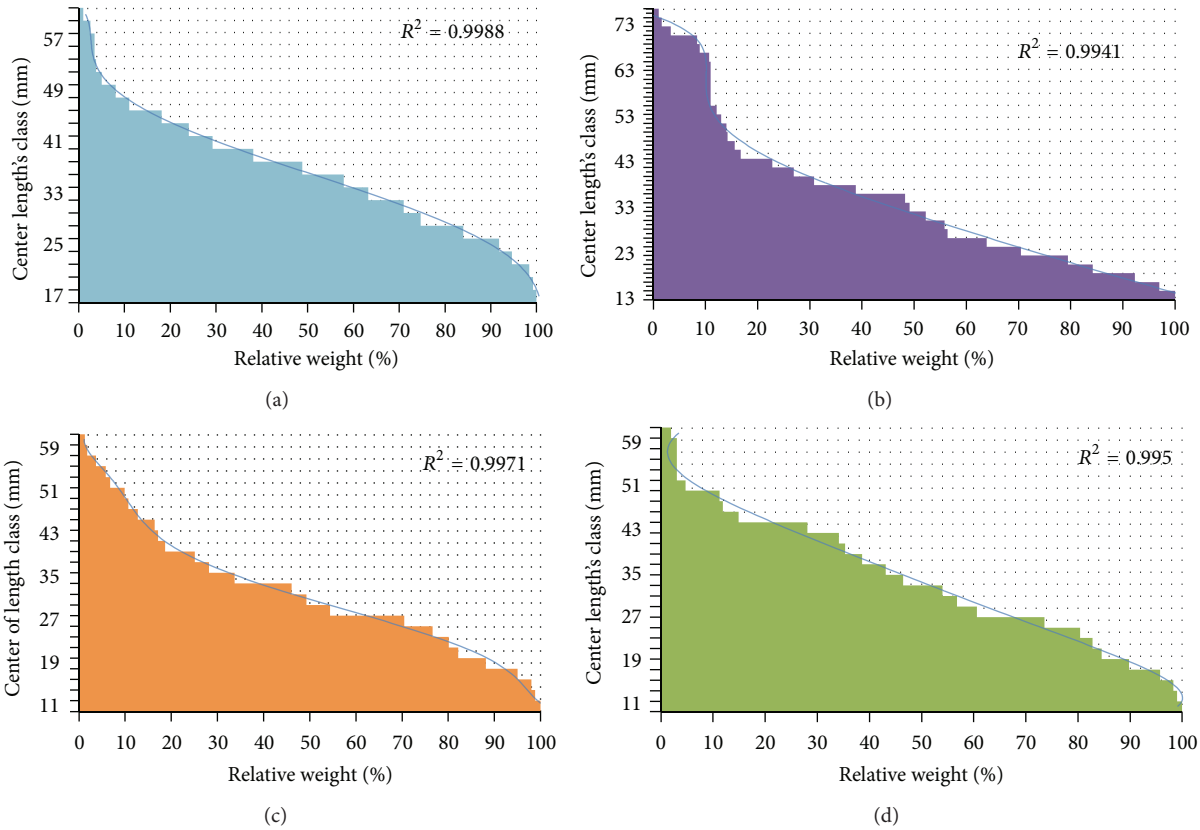

Figure 2: Length's repartition of each extracted fibres, BPS-1 N (a), BPD-0.1 N (b), B-1 N (c), and B-0.1 N (d).

alkaline concentration, prehydrolyzed BPS-1 N fibers get less rigid than the other B-1 N. The prehydrolysis facilitated the attack of the alkaline solution on the polymeric structure by inflating the cellulosic fiber structures as reported for other natural fibers [13]. Fibers extracted under conditions B-0.1 N at low alkaline concentration without prehydrolysis were not able to be bent by the Kawabata device. The concentration was the most effective parameter influenced that the fiber bending properties.

3.4. Observations by SEM. The SEM analysis of extracted fiber bundles allowed for observing the influence of the extraction conditions on the surface of fibers. In comparison with the raw material in Figure 3, the microscopic analysis of extracted fibers, as shown in Figures 4 and 5 demonstrated that all treatments removed various quantities of lignin. The longitudinal view of treated fibers at high concentration in Figure 4 shows a smooth surface. For fibers treated at a low alkaline concentration seen in Figure 5, incrusting materials like pectin are visible between the cells despite the treatment [5]. The presence of these materials showed the limits and the inadequacy of an extraction at low alkaline concentration.

4. Discussions

Due to the previous mechanical action in the sugar mill, different lengths of fiber bundles were obtained with a relative

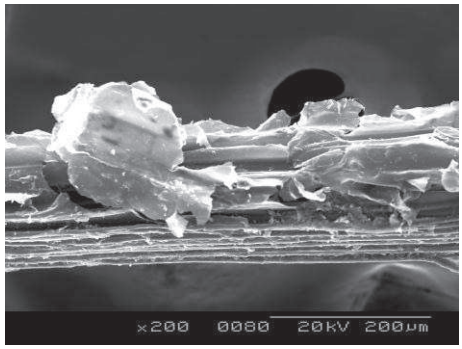

Figure 3: Longitudinal view of raw particle of sugarcane bagasse.

standard deviation of over 50%. Depending on the alkaline concentration as the main factor of severity, fine fibers could be obtained. It was observed that salty prehydrolysis and alkaline concentrations are the parameters that most affect the fiber dimensions. The preference for the salty prehydrolysis as opposed to distilled water was obvious by a visual examination of the color of the bath left after the pretreatment, due to its impact on fiber swelling.

On the one hand, tenacity values of the treated fibers were quite low (7–22 cN/tex) compared to those of other natural fibers like jute (25–53 cN/tex), linen (24–70 cN/tex), or agave (10–28 cN/tex) as discussed elsewhere [14, 15]. On the other hand, the observed values of breaking elongations of

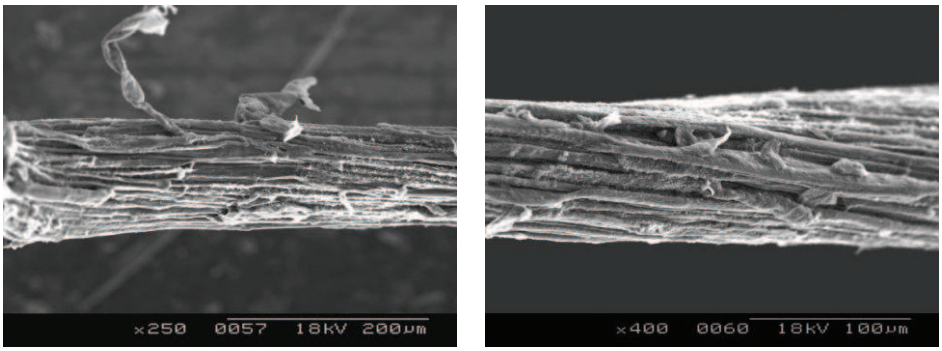

Figure 4: Fiber bundle extracted at 1 N NaOH on longitudinal view: with prehydrolysis on left and without prehydrolysis on right.

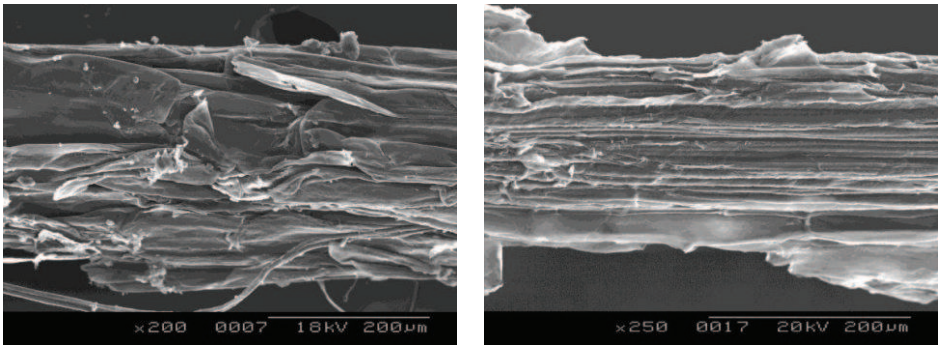

Figure 5: Longitudinal view of fiber bundle extracted at 0.1 N NaOH with prehydrolisis on left and without prehydrolysis on right.

bagasse fibers are similar to those of natural fibers mentioned below. Fiber elongation partially reflects the extent of ease of stretching a fiber. In this case, the extracted sugarcane fibers exhibit a very low value of breaking elongation with respect to breaking strength. Similar results have been reported elsewhere [6] from sugarcane straw lyocell with tenacity of 4.1 cN/tex and elongation rate of 1.80 ± 1.12. Thus, these fibers are not easily stretchable under small loads, which mean in essence that these are fibers with low flexible abilities [16].

This characterization is also supported by results obtained during the bending test. Flexible fibers were obtained due to their bending rigidity [17]. The low elastic recuperation of these fibers could be responsible for the bending hysteresis value obtained. A particular behavior was the irregular displacement of the fiber which could be increased by the irregularity of the sections all along the fiber.

5. Conclusions

Fiber bundles were chemically extracted from raw bagasse of sugarcane. The alkaline extraction was the best and most efficient way to remove lignin since the solution was more concentrated. A prehydrolysis in salty water inflated fibers that facilitated the impregnation of chemical reagent. Alkaline extraction affected the dimensions as well as the mechanical properties of the fibers in bundles. However, the use of alkaline alone or combined with prehydrolysis did not produce ultimate individual fibers. The use of concentrated solution was limited because of the severity of the extraction which prematurely can affect the cellulosic content. Thin fibers were obtained at high alkaline concentration with a lack of tenacity, of bending rigidity, and of bending hysteresis. These parameters could be improved by changing extraction conditions, using additional tools like ultrasounds and mechanical action after the chemical extraction. All in all, fiber bundles dimensions and properties can be controlled by the extraction condition according to the use wanted.

Acknowledgments

The research team has no financial or commercial relations with any of the commercial identities mentioned in this paper. The authors gratefully acknowledge the Region of Martinique and CIRAD Montpellier for the financial support, as well as Dominique PETIT from the CTCS Martinique for the technical support.

References

[1] FAOSTAT, 2012, http://faostat.fao.org/site/567/DesktopDefault.aspx?PageID=567#ancor.

[2] Technical Center of Sugar and Sugarcane of Martinique, "Chiffres de la filière canne: Production agricole et industrielle sur les 10 dernières campagnes. Internal documentation," 2012.

[3] Instituto de investigaciones de la caña de azúcar, "La industria de los derivados de la caña de azúcar," Editorial Científico-Técnica la Habana 111, 1980.

[4] C. Van Dillewijn, *Botany of Sugarcane. Chronica Botanica*, Stechert-Hafner, Waltham, Mass, USA, 1952.

[5] B. J. Collier, J. R. Collier, P. Agarwal, and Y.-W. Lo, "Extraction and evaluation of fibres from sugar cane," *Textile Research Journal*, vol. 62, no. 12, pp. 741–748, 1992.

[6] S. M. Costa, P. G. Mazzola, J. C. A. R. Silva, R. Pahl, A. Pessoa, and S. A. Costa, "Use of sugarcane Straw as a source of cellulose for textile fiber production," *Industrial Crops and Products*, vol. 42, pp. 189–194, 2013.

[7] Cuba9, *Atlas del Bagazo de la Caña de Azúcar*, Geplacea/Pnud, Mexico City, Mexico, 1990.

[8] G. J. M. Rocha, A. R. Gonçalves, B. R. Oliveira, E. G. Olivares, and C. E. V. Rossell, "Steam explosion pretreatment reproduction and alkaline delignification reactions performed on a pilot scale with sugarcane bagasse for bioethanol production," *Industrial Crops and Products*, vol. 35, no. 1, pp. 274–279, 2012.

[9] J. F. Rodriguez, "I taller sobre cellulosa, papel y derivados del bagazo," Filial De La ATAC Cuba 9, 1994.

[10] "Kato Tech Co., LTD. KES-FB2-SH Single Hair Bending Tester: User's Manual," katotech@kestako.co.jp.

[11] D. Michel, *Evaluation du potentiel textile et fibreux des fibres de Saccharum Officinarum [Ph.D. thesis]*, LPMT, University of Haute Alsace, Mulhouse Cedex, France, 2013.

[12] Y. Chaabouni, J. Drean, S. Msahli, and F. Sakli, "Morphological characterization of individual fiber of Agave americana L.," *Textile Research Journal*, vol. 76, no. 5, pp. 367–374, 2006.

[13] M. Dallel, A. Lallam, M. Leon, and M. Renner, "Physical and mechanical characterization of Alfa (stipa tenacissima l.) fibres for textile applications," in *Proceedings of the 12th AUTEX World Textile Conference*, Zadar, Croatia, 2011.

[14] M. Harris, *Handbook of Textile Fiber*, Harris Research Laboratories, Washington DC, USA, 1954.

[15] S. Msahli, J. Y. Drean, and F. Sakli, "Evaluating the fineness of agave Americana L. fibers," *Textile Research Journal*, vol. 75, no. 7, pp. 540–543, 2005.

[16] A. R. Bunsell, *Handbook of Tensile Properties of Textile and Technical Fibers*, vol. 91, Woodhead Publishing Series in Textiles No. 91, Cambridge, UK, 2009.

[17] R. Meredit, *Proceedings of Fifth International Congress on Rheology*, vol. 1, University of Tokyo Press, Tokyo, Japan, 1969.