HAL
open science

Macro-modelling of nonperiodic multilayered elastic media

Ewaryst Wierzbicki, Czeslaw Wozniak

To cite this version:

Ewaryst Wierzbicki, Czeslaw Wozniak. Macro-modelling of nonperiodic multilayered elastic media. Archives of Mechanics, 1991, 43 (2-3), pp.311-327. hal-00944303

HAL Id: hal-00944303

https://hal.science/hal-00944303v1

Submitted on 18 Feb 2014

HAL is a multi-disciplinary open access archive for the deposit and dissemination of scientific research documents, whether they are published or not. The documents may come from teaching and research institutions in France or abroad, or from public or private research centers.

L'archive ouverte pluridisciplinaire **HAL**, est destinée au dépôt et à la diffusion de documents scientifiques de niveau recherche, publiés ou non, émanant des établissements d'enseignement et de recherche français ou étrangers, des laboratoires publics ou privés.

Macro-modelling of nonperiodic multilayered elastic media

E. WIERZBICKI and CZ. WOŹNIAK (WARSZAWA)

THE DERIVATION of effective coefficients for multilayered elastic periodic media characterized by multiple periodocity over several length scales is a well studied problem. In this paper a method is proposed for effective modelling of nonperiodic multilayered media. The obtained macroscopically equivalent medium is macro--nonhomogeneous but it can be applied as a basis for numerical or analytical solutions to various engineering problems.

Otrzymywanie modułów efektywnych dla wielowarstwowych ośrodków sprężystych o strukturze periodycznej jest w literaturze dobrze zbadanym problemem. Praca zawiera propozycję metody efektywnego modelowania nieperiodycznych ośrodków wielowarstwowych. Wyprowadzony model ośrodka makroskopowo równoważnego jest wprawdzie także niejednorodny lecz może być podstawową numerycznego, bądź analitycznego rozwiązywania zagadnień technicznych.

Получение эффективных модулей для многослоистых упругих сред с периодической структурой является хорошо исследованной в литературе проблемой0 Настоящая же работа содержит предположение метода эффективного моделирования непериодических многослоистых сред0 Выведенная моделъ макроскопически эквивалентной среды, хотя является также неоднородной, но может быть основой численного или аналитического решения технических задач0

1. Introduction

THE MACRO-MODELLING (effective modelling) of multilayered media can be applied to problems in which, roughly speaking, the excitation of a medium produces wave lengths much largr than the layer thickness. The formulation of such models, represented by certain homogeneous macroscopically equivalent (effective) media, is well known provided that the layered structure of a medium is periodic (see, for example, Refs. [1, 10, 12]). In this case the effective medium is homogeneous. The homogenization can be also extended to the case of multiple periodicity, [6]. However, in the recent literature no attention has been given to the formation of *heterogeneous effective models* for multilayered but *nonperiodic media*; the effective behaviour in different parts of such media may be different since the effective medium (provided that it exists) is not homogeneous.

The purpose of the paper is to obtain a heterogeneous effective model (a macroscopically equivalent medium) for some multilayered but nonperiodic

composites, which is plausible from the engineering standpoint. The proposed method of modelling is based on some *a priori* hypotheses and on certain concepts of the nonstandard analysis [8, 11]. It has to be emphasized that the nonstandard notions will be used only as a mathematical tool and will not enter the resulting equations. For the sake of simplicity the considerations are restricted to the multilayered media made of two linear elastic isotropic materials, but the method can also be applied to structures composed of a large number of different materials. It is shown that the effective properties of nonperiodic multilayered media under consideration can be described by certain sufficiently regular *effective moduli functions*; for periodic media the values of these functions are constant and coincide with the well-known effective moduli derived by the homogenization approaches. The proposed method of macro-modelling also makes it possible to evaluate the local states of strain and stress in a particular layer.

2. The primary problem

Let the heterogeneous medium under consideration (which will be referrred to as the composite) in the undeformed state occupies a region $\Omega = \Pi \times (0, h)$ of 3-space, where Π is a regular region on the plane $0x_1x_2$. Setting $\mathbf{x}' \equiv (x_1, x_2) \in \Pi$, $x_3 \in (0,h)$, we shall treat $\mathbf{x} = (\mathbf{x}', x_3) = (x_1, x_2, x_3) \in \Omega$ as the material coordinates. It is assumed that the composite is made of N layers bounded by the coordinate planes $x_3 = \zeta_K$, $K = 0,1,\ldots, N$, with $\zeta_0 = 0$, $\zeta_N = h$. Moreover, let every layer (ζ_{K-1}, ζ_K) consists of two sublayers $(\zeta_{K-1}, \zeta_{K-1} + \delta_K)$, $(\zeta_{K-1} + \delta_K, \zeta_K)$, made of two different homogeneous materials. The scheme of the composite medium and the basic notions are shown in Fig. 1. Setting $\eta_K \equiv \delta_K / \varepsilon_K$, where $\varepsilon_K \equiv \zeta_K - \zeta_{K-1}$ (subscript K runs over the sequence 1, 2,..., N unless otherwise stated), define the subsets of $(0,h)$ by means of

$$L \equiv \bigcup_{K=1}^{N} (\zeta_{K-1}, \zeta_{K-1} + \eta_K \varepsilon_K),$$

$$U \equiv \bigcup_{K=1}^{N} (\zeta_{K-1} + \eta_K \varepsilon_K, \zeta_K).$$

It is assumed that the composite is made of two homogeneous linear-elastic isotropic materials which in the undeformed state occupy the parts $\Pi \times L$ and $\Pi \times U$ of the region $\Omega = \Pi \times (0,h)$. Hence the mass density $\rho(x_3)$ and the Lamé moduli $\lambda(x_3)$, $\mu(x_3)$ of the composite under consideration will be given by

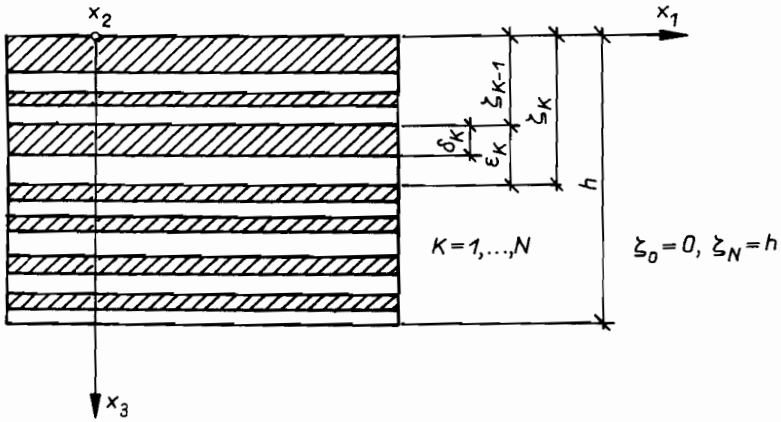

FIG. 1. Scheme of the composite.

$$(\rho(x_3), \lambda(x_3), \mu(x_3)) = \begin{cases} (\rho^l,\ \lambda^l,\ \mu^l) & \text{if } x_3 \in L, \\ (\rho^u,\ \lambda^u,\ \mu^u) & \text{if } x_3 \in U, \end{cases} \tag{2.1}$$

where ρ^l, λ^l, μ^l and ρ^u, λ^u, μ^u, are material constants related to the parts $\Pi \times L$ and $\Pi \times U$, respectively, of the undeformed composite medium.

For the sake of simplicity it is assumed that at every time instant $\tau \in [0, \tau_f]$ the composite is loaded on the boundary planes $x_3 = 0$, $x_3 = h$ by the known surface tractions $\mathbf{p}_0(\mathbf{x}', \tau)$, $\mathbf{p}_h(\mathbf{x}', \tau)$, $\mathbf{x}' \equiv (x_1, x_2) \in \Pi$, respectively, and on the part $\Gamma \equiv \partial\Pi \times (0, h)$ of the boundary the displacements $\mathbf{u}(\mathbf{x}, \tau)$ are known. By $\mathbf{t}(\mathbf{x}, \tau)$, $\mathbf{x} \in \Omega$, $\tau \in [0, \tau_f]$ we denote the Cauchy stress tensor. For every smooth vector field $\mathbf{v}(\cdot)$ defined on Ω we also define the field

$$\mathbf{e}(\mathbf{v})(\mathbf{x}) \equiv \frac{1}{2}[\operatorname{grad} \mathbf{v}(\mathbf{x}) + (\operatorname{grad} \mathbf{v}(\mathbf{x}))^T], \quad \mathbf{x} \in \Omega.$$

The governing equations of the composite under consideration will be represented by

1) the principle of virtual work

$$\int_0^h \int_\Pi \operatorname{tr}[\mathbf{t}(\mathbf{x},\tau)\mathbf{e}(\mathbf{v})(\mathbf{x})]\, d\Pi dx_3 = \int_\Pi [\mathbf{p}_0(\mathbf{x}', \tau) \cdot \mathbf{v}(\mathbf{x}', 0) + \mathbf{p}_h(\mathbf{x}', \tau) \cdot \mathbf{v}(\mathbf{x}', h)]\, d\Pi$$
$$+ \int_0^h \int_\Pi \rho(x_3)[\mathbf{b}(\mathbf{x}, \tau) - \ddot{\mathbf{u}}(\mathbf{x}, \tau)] \cdot \mathbf{v}(\mathbf{x})\, d\Pi dx_3, \quad d\Pi \equiv dx_1 dx_2, \quad \tau \in [0, \tau_f], \tag{2.2}$$

which has to hold for every (sufficiently regular) test function $\mathbf{v}(\mathbf{x})$, $\mathbf{x} \in \Omega$, such that $\mathbf{v}(\mathbf{x}) = \mathbf{0}$ for $\mathbf{x} \in \Gamma$;

2) the relations between stresses $\mathbf{t}(\mathbf{x},\tau)$ and strains $\mathbf{e}(\mathbf{u})(\mathbf{x},\tau)$ in the well-known form

$$\mathbf{t}(\mathbf{x},\tau) = \lambda(x_3)\mathbf{1}\,\mathrm{tr}\,\mathbf{e}(\mathbf{u})(\mathbf{x},\tau) + 2\mu(x_3)\mathbf{e}(\mathbf{u})(\mathbf{x},\tau) \tag{2.3}$$

with $\rho(x_3)$, $\lambda(x_3)$, $\mu(x_3)$ determined by Eqs. (2.1).

At the same time the initial and boundary conditions for displacements

$$\begin{gathered} \mathbf{u}(\mathbf{x},\ 0) = \mathbf{u}_0(\mathbf{x}),\ \dot{\mathbf{u}}(\mathbf{x},\ 0) = \mathbf{v}_0(\mathbf{x}),\ \ \mathbf{x}\in\Omega, \\ \mathbf{u}(\mathbf{x}',\ x_3,\ \tau) = \mathbf{u}_\Gamma(\mathbf{x}',\ x_3,\ \tau),\ (\mathbf{x}',\ x_3)\in\Gamma,\ \ \tau\in[0,\ \tau_f], \end{gathered} \tag{2.4}$$

have to be satisfied; the right-hand sides of Eqs. (2.4) are assumed to be known.

Now we formulate the following

PROBLEM $\mathscr{P}$: for known $\Omega = \Pi\times(0,h)$, $\mathbf{p}_0(\cdot)$, $\mathbf{p}_h(\cdot)$, $\mathbf{b}(\cdot)$, $\mathbf{u}_0(\cdot)$, $\mathbf{v}_0(\cdot)$, $\mathbf{u}_\Gamma(\cdot)$ and λ^l, μ^l, ρ^l, λ^u, μ^u, ρ^u as well as for known L, U, find the displacements $\mathbf{u}(\mathbf{x},\tau)$ and stresses $\mathbf{t}(\mathbf{x},\tau)$, $\mathbf{x}\in\Omega$, $\tau\in[0,\tau_f]$, such that Eqs. (2.2)—(2.4) under conditions (2.1) hold.

Here and in the sequel we tacitly assume that all functions under consideration satisfy the required regularity conditions; for the particulars the reader is referred to DUVAUT and LIONS [3]. The problem $\mathscr{P}$ will be called the primary problem; it describes the composite within the linear elasticity theory.

In the sequel we shall assume that $\varepsilon \equiv \max \varepsilon_K \ll h$; then the number N of layers (and hence the number $2N-1$ of interfaces) is very large. In this case the above primary problem based on the linear elasticity theory does not constitute a mathematical tool which can be successfully applied to the numerical calculation of engineering problems. That is why we shall pass from the problem $\mathscr{P}$ to a certain effective problem $\mathscr{P}^{\mathrm{eff}}$ and the to averaged (computational) model of the composite which will be plausible for engineering applications. In order to formulate the problem $\mathscr{P}^{\mathrm{eff}}$ we shall first formulate a certain auxiliary problem $\mathscr{P}^{(1)}$ and then a sequence of problems $\mathscr{P}^{(m)}$, $m = 1, 2, 3, \ldots$, leading to a nonstandard problem $\mathscr{P}^{(\check{\omega})}$, where $\check{\omega}$ is an infinitely large positive integer, [8]. The effective problem $\mathscr{P}^{\mathrm{eff}}$ will be obtained by a certain special approximation of the problem $\mathscr{P}^{(\check{\omega})}$.

3. The filtrated problem

Define the mappings

$$\zeta_D\colon \left\{\frac{h}{N}, \frac{2h}{N}, \ldots, \frac{(N-1)h}{N}, h\right\} \to [0,h],\quad \eta_D\colon \left\{\frac{h}{N}, \frac{2h}{N}, \ldots, \frac{(N-1)h}{N}, h\right\} \to [0,1] \tag{3.1}$$

setting

$$\zeta_D\left(\frac{Kh}{N}\right) \equiv \zeta_K, \quad \eta_D\left(\frac{Kh}{N}\right) \equiv \eta_K, \quad K = 1, \ldots, N.$$

The mappings $\zeta_D(\cdot)$, $\eta_D(\cdot)$ describe the distribution of layers and sublayers in the composites under consideration. In order to formulate the filtrated problem we shall „approximate" mappings $\zeta_D(\cdot)$, $\eta_D(\cdot)$ by certain smooth functions $\zeta(\cdot)$, $\eta(\cdot)$, respectively, defined on the interval $[0, h]$:

$$\zeta : [0, h] \to [0, h], \quad \eta : [0, h] \to (0, 1) \tag{3.2}$$

where $\zeta(\cdot)$ is a strongly monotone function, such that $\zeta(0) = 0$, $\zeta(h) = h$. The passage from functions (3.1) to functions (3.2) is not unique and represents a certain filtration procedure; the particulars can be found in RYMARZ [9]. From the point of view of the proposed method of modelling, the function $\eta(\cdot)$ cannot be a highly oscillating function, i.e. it should have wavelengths much greater than the greatest layer thicknes $\varepsilon \equiv \max \varepsilon_K$. Roughly speaking, $\eta(\cdot)$ has to constitute a good smooth approximation of the mapping $\eta_D(\cdot)$. In some special cases the filtration can be reduced to the smooth interpolation of $\zeta_D(\cdot)$ and $\eta_D(\cdot)$ given by $\zeta(Kh/N) = \zeta_D(Kh/N)$, $\eta(Kh/N) = \eta_D(Kh/N)$ for $K = 1, 2, \ldots, N$. It has to be emphasized, however, that for some composites the good smooth approximation $\eta(\cdot)$ of $\eta_D(\cdot)$ may not exist.

Now define

$$\zeta_K^{(1)} \equiv \zeta\left(\frac{Kh}{N}\right), \quad \eta_K^{(1)} \equiv \eta\left(\frac{Kh}{N}\right), \quad \varepsilon^{(1)} \equiv \zeta_K^{(1)} - \xi_{K-1}^{(1)}, \quad K = 1, \ldots, N \tag{3.3}$$

and

$$L^{(1)} \equiv \bigcup_{K=1}^{N} (\zeta_{K-1}^{(1)}, \zeta_{K-1}^{(1)} + \eta_K^{(1)} \varepsilon_K^{(1)}),$$
$$U^{(1)} \equiv \bigcup_{K=1}^{N} (\zeta_{K-1}^{(1)} + \eta_K^{(1)} \varepsilon_K^{(1)}, \zeta_K^{(1)}).$$

Using the sets $L^{(1)}$, $U^{(1)}$ we shall introduce a certain „filtrated" distribution of material components in the multilayered composite, which will be given by

$$(\rho(x_3), \lambda(x_3), \mu(x_3)) = \begin{cases} (\rho^l, \lambda^l, \mu^l) & \text{if } x_3 \in L^{(1)}, \\ (\rho^u, \lambda^u, \mu^u) & \text{if } x_3 \in U^{(1)}, \end{cases} \tag{3.4}$$

and we formulate

PROBLEM $\mathscr{P}^{(1)}$: for the known $\Omega, \ldots, u_\Gamma(\cdot)$ and $\lambda^l, \ldots, \mu^u$ as in the problem $\mathscr{P}$, and for the known $L^{(1)}$, $U^{(1)}$, find the displacements $\mathbf{u}(\mathbf{x}, \tau)$ and stresses $\mathbf{t}(\mathbf{x}, \tau)$; $\mathbf{x} \in \Omega$, $\tau \in [0, \tau_f]$, such that Eqs. (2.2)—(2.4) under conditions (3.4) hold.

The problem $\mathscr{P}^{(1)}$ will be referred to as the filtrated problem. It is easy to see that if the filtration of mappings $\zeta_D(\cdot)$, $\eta_D(\cdot)$ reduces to their smooth interpolation onto $[0, h]$, then the problems $\mathscr{P}$ and $\mathscr{P}^{(1)}$ coincide.

The method of modelling proposed in this paper is based on two heuristic hypotheses. The first hypothesis will be referred to as

THE FILTRATION HYPOTHESIS. *If $\varepsilon \equiv \max \varepsilon_K \ll h$ and if there exist a good smooth approximation $\eta(\cdot)$ of $\eta_D(\cdot)$ then the primary problem $\mathscr{P}$ can be approximated by the filtrated problem $\mathscr{P}^{(1)}$.*

Here and in the sequel the approximation of a certain boundary value problem has to be understood from the point of view of the engineering applications of the theory. It means that the displacements obtained from the solution to the filtrated problem $\mathscr{P}^{(1)}$ have to approximate the displacements obtained from the solution to the primary problem $\mathscr{P}$. At the same time the stresses from the problem $\mathscr{P}^{(1)}$ have to approximate the stresses derived from the problem $\mathscr{P}$, provided that they are both related to the same material component of the composite. As we have stated above, for some composites a good smooth approximation $\eta(\cdot)$ of the discrete function $\eta_D(\cdot)$ may not exist; then the macro-modelling procedure proposed in this paper cannot be applied.

4. Passage to the nonstandard problem (see Appendix)

Let m be an arbitrary but fixed positive integer. Define

$$(4.1)\quad \zeta_L^{(m)} \equiv \zeta\left(\frac{Lh}{mN}\right),\ \eta_L^{(m)} \equiv \eta\left(\frac{Lh}{mN}\right),\ \varepsilon_L^{(m)} \equiv \zeta_L^{(m)} - \zeta_{L-1}^{(m)},\ L = 1, 2, \ldots, mN$$

and

$$L^{(m)} \equiv \bigcup_{L=1}^{mN} (\zeta_{L-1}^{(m)}, \zeta_{L-1}^{(m)} + \eta_L^{(m)} \varepsilon_L^{(m)}),$$
$$U^{(m)} \equiv \bigcup_{L=1}^{mN} (\zeta_{L-1}^{(m)} + \eta_L^{(m)} \varepsilon_L^{(m)}, \zeta_L^{(m)}).$$

Using (4.1) we shall introduce the sequence of problems $\mathscr{P}^{(m)}$, $m = 1, 2, \ldots$, which will be derived from the filtrated problem $\mathscr{P}^{(1)}$ by assuming that the distribution of the material components in a composite described by the problem $\mathscr{P}^{(m)}$ is given by

$$(4.2)\qquad (\rho(x_3), \lambda(x_3), \mu(x_3)) = \begin{cases} (\rho^l, \lambda^l, \mu^l) & \text{if } x_3 \in L^{(m)} \\ (\rho^u, \lambda^u, \mu^u) & \text{if } x_3 \in U^{(m)}. \end{cases}$$

Then an arbitrary auxiliary problem $\mathscr{P}^{(m)}$, $m = 1, 2, \ldots$, will be stated as follows:

PROBLEM $\mathscr{P}^{(m)}$: for the known $\Omega, \ldots, u_\Gamma(\cdot)$ and $\lambda^l, \ldots, \rho^u$ as in the problem $\mathscr{P}$, and for the known $L^{(m)}$, $U^{(m)}$, find the displacements $\mathbf{u}(\mathbf{x}, \tau)$ and stresses $\mathbf{t}(\mathbf{x}, \tau); \mathbf{x} \in \Omega$, $\tau \in [0, \tau_f]$, such that Eqs. (2.2) — (2.4) under condition (4.2) hold.

Define $\varepsilon^{(1)} \equiv \max \varepsilon_K^{(1)}$, $K \in \{1, \ldots, N\}$, as the maximum thickness of a layer in a composite described by the filtrated problem $\mathscr{P}^{(1)}$. The second heuristic hypothesis constituting the phenomenological basis for the proposed method of modelling will be referred to as

THE MACRO-MODELLING HYPOTHESIS. *If* $\varepsilon^{(1)} \equiv \max \varepsilon_K^{(1)} \ll h$ *then the filtrated problem* $\mathscr{P}^{(1)}$ *can be approximated (in the sense explained in* Sect. 3) *by the problem* $\mathscr{P}^{(m)}$ *for every positive integer* m.

The filtration and macro-modelling hypotheses imply that the primary problem $\mathscr{P}$ can be approximated by the problem $\mathscr{P}^{(m)}$, for every $m = 1, 2, \ldots$. It means, rougly speaking, that the composites described by the problems $\mathscr{P}$, $\mathscr{P}^{(1)}$, $\mathscr{P}^{(2)}, \ldots$, have practically the same macro-material properties.

Using the concepts of the nonstandard analysis, the problem $\mathscr{P}^{(\check{\omega})}$ can be formulated, where $\check{\omega}$ is an arbitrary but fixed infinite positive integer. The formulation of the problem $\mathscr{P}^{(\check{\omega})}$ is similar to that of the problem $\mathscr{P}^{(m)}$. To this end define

$$\zeta_M^{(\check{\omega})} \equiv {}^*\zeta\left(\frac{Mh}{\check{\omega}N}\right), \quad \eta_M^{(\check{\omega})} \equiv {}^*\eta\left(\frac{Mh}{\check{\omega}^M}\right), \quad \varepsilon_M^{(\check{\omega})} \equiv \zeta_M^{(\check{\omega})} - \zeta_{M-1}^{(\check{\omega})}, \quad M = 1, 2, \ldots, \check{\omega}N,$$

where ${}^*\zeta(\cdot)$, ${}^*\eta(\cdot)$ are standard functions [8, 12]. Then define the nonstandard subsets of the interval ${}^*(0, h)$ by means of

$$L^{(\check{\omega})} \equiv \bigcup_{M=1}^{\check{\omega}N} (\zeta_{M-1}^{(\check{\omega})}, \zeta_{M-1}^{(\check{\omega})} + \eta_M^{(\check{\omega})} \varepsilon_M^{(\check{\omega})}),$$

$$U^{(\check{\omega})} \equiv \bigcup_{M=1}^{\check{\omega}N} (\zeta_{M-1}^{(\check{\omega})} + \eta_M^{(\check{\omega})} \varepsilon_M^{(\check{\omega})}, \zeta_M^{(\check{\omega})}).$$

Hence the distribution of material components for a „composite" described by the nonstandard problem $\mathscr{P}^{(\check{\omega})}$ will be given by

$$(\rho(x_3), \lambda(x_3), \mu(x_3)) = \begin{cases} (\rho^l, \lambda^l, \mu^l) & \text{if } x_3 \in L^{(\check{\omega})}, \\ (\rho^u, \lambda^u, \mu^u) & \text{if } x_3 \in U^{(\check{\omega})}. \end{cases} \tag{4.3}$$

Under above notations the problem $\mathscr{P}^{(\check{\omega})}$ will be stated as follows:

PROBLEM $\mathscr{P}^{(\check{\omega})}$: for the known $\Omega, \ldots, \mathbf{u}_\Gamma(\cdot)$ and $\lambda^l, \ldots, \mu^u$ as in the problem $\mathscr{P}$ (cf. remark below), and for the known $L^{(\check{\omega})}$, $U^{(\check{\omega})}$, find the displacements $\mathbf{u}(\mathbf{x}, \tau)$ and stresses $\mathbf{t}(\mathbf{x}, \tau)$, $\mathbf{x} \in {}^*\Omega$, $\tau \in {}^*[0, \tau_f]$, such that Eqs. (2.2)—(2.4) under conditions (4.3) hold.

REMARK. From the formal point of view in Eqs. (2.2)—(2.4) the entities Ω, $\mathbf{p}_0(\cdot)$, $\mathbf{p}_h(\cdot)$, $\mathbf{b}(\cdot)$, $\mathbf{u}_0(\cdot)$, $\mathbf{v}_0(\cdot)$, $\mathbf{u}_{\Gamma}(\cdot)$ have to be replaced by the standard entities $^*\Omega$, $^*\mathbf{p}_0(\cdot)$, $^*\mathbf{p}_h(\cdot)$, $^*\mathbf{b}(\cdot)$, $^*\mathbf{u}_0(\cdot)$, $^*\mathbf{v}_0(\cdot)$, $^*\mathbf{u}_{\Gamma}(\cdot)$, respectively.

It is easy to see that the problem $\mathscr{P}^{(\breve{\omega})}$ describes a certain „composite" which is made of an infinite number of infinitely thin layers; such a „composite" can be properly described only within the framework of the nonstandard analysis. It has to be emphasized that the problems $\mathscr{P}$, $\mathscr{P}^{(m)}$, m 1, 2,..., under pertinent regularity conditions, are well-posed as mixed boundary value problems of the linear elasticity theory, [3]. Hence the transfer principle, [12], implies that the nonstandard problem $\mathscr{P}^{(\breve{\omega})}$ is also well-posed, i.e., it has a unique solution. From the transfer principle we also obtain the following

COROLLARY. *The primary problem $\mathscr{P}$ can be approximated (in the sense explained in Sect. 3) by the nonstandard problem $\mathscr{P}^{(\breve{\omega})}$, provided that the filtration and macro-modelling hypotheses hold.*

The above corollary will be the basis for the formulation of the effective problem $\mathscr{P}^{\text{eff}}$ formulated as the problem related to a certain macroscopically equivalent (effective) medium. This medium is not homogeneous but does not possess highly oscillating material properties and, hence, can be used as a computational model of multilayered composites.

5. The effective problem

In order to formulate the effective problem, we introduce the following

MICRO-MACRO APPROXIMATION ASSUMPTION. *The approximate solution $\mathbf{u}(\mathbf{x}, \tau)$, $\mathbf{x} \in {}^*\Omega$, $\tau \in {}^*[0, \tau_f]$, to the nonstandard problem $\mathscr{P}^{(\breve{\omega})}$, can be expected in the class of functions given by*

$$\mathbf{u}(\mathbf{x}, \tau) = {}^*\mathbf{U}(\mathbf{x}, \tau) + h(x_3)\,{}^*\mathbf{Q}(\mathbf{x}, \tau), \quad \mathbf{x} = (\mathbf{x}', x_3) \in {}^*\Pi \times {}^*(0, h), \quad \tau \in {}^*(0, \tau_f], \tag{5.1}$$

where $h(\cdot)$ is the nonstandard function defined by

$$h(x_3) = \begin{cases} \dfrac{x_3 - \zeta_{M-1}^{(\breve{\omega})}}{\eta_M^{(\breve{\omega})}} & \text{if } x_3 \in (\zeta_{M-1}^{(\breve{\omega})}, \zeta_{M-1}^{(\breve{\omega})} + \eta_M^{(\breve{\omega})} \varepsilon_M^{(\breve{\omega})}),\ M = 1, 2, \ldots, \breve{\omega} N, \\ \dfrac{\zeta_M^{(\breve{\omega})} - x_3}{1 - \eta_M^{(\breve{\omega})}} & \text{if } x_3 \in (\zeta_{M-1}^{(\breve{\omega})} + \eta_M^{(\breve{\omega})} \varepsilon_M^{(\breve{\omega})}, \zeta_M^{(\breve{\omega})}),\ M = 1, 2, \ldots, \breve{\omega} N, \end{cases}$$

and $^*\mathbf{U}(\cdot)$, $^*\mathbf{Q}(\cdot)$ are (sufficiently regular) arbitrary standard vector-valued functions.

The approximation introduced by Eq. (5.1) will be referred to as the micro-macro localization. The vectors $\mathbf{U}(\mathbf{x}, \tau)$, $\mathbf{Q}(\mathbf{x}, \tau)$; $(\mathbf{x}, \tau) \in \Omega \times [0, \tau_f]$ are called macrodisplacements and correction (microlocal or micromorphic, cf. [4, 11]) parameters, respectively. The function $h(\cdot)$ attains exlusively infinitely

small values and hence the influence of the correction parameters on the displacements $\mathbf{u}(\mathbf{x}, \tau)$ in the problem $\mathscr{P}^{(\mathscr{D})}$ can be neglected. However, the derivatives of $h(\cdot)$ in $L^{(\mathscr{D})}$ and $U^{(\mathscr{D})}$ attain values that are not infinitely small. Thus the correction parameter fields $\mathbf{Q}(\cdot, \tau)$ play an essential role in the evaluation of derivatives $\mathbf{u}_{,3}(\mathbf{x}, \tau)$.

The final step in the proposed line of modelling is based on the following

MICRO-MACRO MODELLING LEMMA. The approximate solution to the nonstandard problem $\mathscr{P}^{(\mathscr{D})}$, under conditions specified in the micro-macro approximation assumption, can be found as the solution to a certain problem for the displacements $\mathbf{U}(\mathbf{x}, \tau)$ and the correction parameters $\mathbf{Q}(\mathbf{x}, \tau)$; $\mathbf{x} \in \Omega$, $\tau \in [0, \tau_f]$; this problem does not involve any nonstandard entity.

The „standard" problem for the macrodisplacements and the correction parameters mentioned in the micro-macro modelling lemma will be referred to as the effective problem and denoted by $\mathscr{P}^{\mathrm{eff}}$. The formulation of this problem will be given below, but for the proof of the micro-macro modelling lemma the reader is referred to a separate paper. Setting $\psi \in \{\lambda, \mu, \rho\}$, we shall use the notations

$$
\begin{aligned}
\tilde{\psi}(x_3) &\equiv \eta(x_3)\psi^l + (1 - \eta(x_3))\psi^u, \\
\hat{\psi}(x_3) &\equiv \psi^l/\eta(x_3) + \psi^u/(1 - \eta(x_3)), \\
[\psi] &\equiv \psi^l - \psi^u.
\end{aligned} \tag{5.2}
$$

Under the aforementioned notations the effective problem can be stated as follows:

PROBLEM $\mathscr{P}^{\mathrm{eff}}$: for the known $\Omega, \ldots, u_\Gamma(\cdot)$ and $\lambda^l, \ldots, \rho^u$ as in the problem $\mathscr{P}$, and for the known function $\eta(\cdot)$, find the macrodisplacements $\mathbf{U}(\mathbf{x}, \tau)$ and the microlocal parameters $\mathbf{Q}(\mathbf{x},\tau)$, $\mathbf{x} \in \Omega$, $\tau \in [0, \tau_f]$, satisfying the equations

$$
\begin{aligned}
T_{ij,j}(\mathbf{x}, \tau) + \tilde{\rho}(x_3) b_i(\mathbf{x}, \tau) &= \tilde{\rho}(x_3) \ddot{U}(\mathbf{x}, \tau), \\
S_i(\mathbf{x}, \tau) = 0, \quad \mathbf{x} \in \Omega, \quad \tau &\in [0, \tau_f],
\end{aligned} \tag{5.3}
$$

where

$$
\begin{aligned}
T_{ij}(\mathbf{x}, \tau) &= \tilde{\lambda}(x_3)\delta_{ij} E_{kk}(\mathbf{x}, \tau) + 2\tilde{\mu}(x_3) E_{ij}(\mathbf{x}, \tau) \\
&\quad + [\lambda]\delta_{ij} Q_3(\mathbf{x}, \tau) + [\mu](\delta_{i3} Q_j(\mathbf{x}, \tau) + \delta_{j3} Q_i(\mathbf{x}, \tau)), \\
S_i(\mathbf{x}, \tau) &= \delta_{i3}\hat{\lambda}(x_3) Q_3(\mathbf{x}, \tau) + \hat{\mu}(x_3)(Q_i(\mathbf{x}, \tau) + \delta_{i3} Q_3(\mathbf{x}, \tau)) \\
&\quad + \delta_{i3}[\lambda] E_{kk}(\mathbf{x}, \tau) + 2[\mu] E_{3i}(\mathbf{x}, \tau), \quad i, j, k \in \{1, 2, 3,\},
\end{aligned} \tag{5.4}
$$

with $E_{ij}(\mathbf{x}, \tau) = (U_{i,j}(\mathbf{x}, \tau) + U_{j,i}(\mathbf{x}, \tau))/2$, as well as the following boundary and initial conditions

$$
(5.5)\qquad
\begin{aligned}
&-T_{i3}(\mathbf{x}', 0, \tau) = p_{0i}(\mathbf{x}', \tau),\\
&T_{i3}(\mathbf{x}', h, \tau) = p_{hi}(\mathbf{x}', \tau), \quad \mathbf{x}' = (x_1, x_2) \in \Pi, \ \tau \in [0, \tau_f],\\
&U_i(\mathbf{x}, 0) = u_{0i}(\mathbf{x}),\\
&\dot{U}_i(\mathbf{x}, 0) = v_{0i}(\mathbf{x}), \quad \mathbf{x} \in \Omega = \Pi \times (0, h).
\end{aligned}
$$

Using the approach presented by NANIEWICZ [7] it can be shown that the effective problem $\mathscr{P}^{\mathrm{eff}}$ is well-posed, i.e., under pertinent regularity conditions it has a unique solution. The term „effective" is due to the fact that the functions entering the problem $\mathscr{P}^{\mathrm{eff}}$ do not suffer discontinuities across the interfaces between the adjacent layers, and hence this problem can constitute the basis for the analysis and numerical solutions to many engineering problems. It can be observed that the material properties of the composite in the effective problem are described by the smooth functions $\tilde{\lambda}(\cdot)$, $\tilde{\mu}(\cdot)$, $\hat{\lambda}(\cdot)$, $\hat{\mu}(\cdot)$ of the x_3-coordinate and by the constants $[\lambda]$, $[\mu]$. Tensor $\mathbf{T}(\mathbf{x}, \tau)$ and vector $\mathbf{S}(\mathbf{x}, \tau)$ will be called the mean stress tensor and the stress discontinuity vector, respectively. The scalar $\tilde{\rho}(x_3)$ will be referred to as the (local) mean mass density.

It is easy to show that the correction parameters can be eliminated from the governing equations of the effective problem by means of the formulae

$$
(5.6)\qquad
\begin{aligned}
&Q_\alpha(\mathbf{x}, \tau) = -\frac{[\mu]}{\hat{\mu}(x_3)}(U_{3,\alpha}(\mathbf{x}, \tau) + U_{\alpha,3}(\mathbf{x}, \tau)), \quad \alpha = 1, 2,\\
&Q_3(\mathbf{x}, \tau) = -\frac{[\lambda]\, U_{k,k}(\mathbf{x}, \tau) + 2[\mu]\, U_{3,3}(\mathbf{x}, \tau)}{\hat{\lambda}(x_3) + 2\hat{\mu}(x_3)}.
\end{aligned}
$$

Now define

$$
(5.7)\qquad
\begin{aligned}
&\mu_0(x_3) \equiv \hat{\mu}(x_3) - [\mu]^2/\hat{\mu}(x_3) = (\eta(x_3)/\mu^l + (1 - \eta(x_3))/\mu^u)^{-1},\\
&\varkappa_0(x_3) \equiv \tilde{\lambda}(x_3) + 2\tilde{\mu}(x_3) - ([\lambda] + 2[\mu])^2/(\hat{\lambda}(x_3) + 2\hat{\mu}(x_3))\\
&\qquad\qquad = (\eta(x_3)/(\lambda^l + 2\mu^l) + (1 - \eta(x_3))/(\lambda^u + 2\mu^u))^{-1},\\
&\lambda'(x_3) \equiv \tilde{\lambda}(x_3) - [\lambda]^2/(\hat{\lambda}(x_3) + 2\hat{\mu}(x_3)),\\
&\lambda''(x_3) \equiv \tilde{\lambda}(x_3) - [\lambda]([\lambda] + 2[\mu])/(\hat{\lambda}(x_3) + 2\hat{\mu}(x_3)).
\end{aligned}
$$

Using Eqs. (5.6) and (5.7) it can be shown that the governing equations for the macrodisplacements $U_i(\mathbf{x}, \tau)$, $\mathbf{x} \in \Omega$, $\tau \in [0, \tau_f]$, will take the form

$$
(5.8)\qquad
\begin{aligned}
&T_{ij,j}(\mathbf{x}, \tau) + \tilde{\rho}(x_3)\, b_i(\mathbf{x}, \tau) = \tilde{\rho}(x_3)\, \ddot{U}_i(\mathbf{x}, \tau),\\
&E_{ij}(\mathbf{x}, \tau) = (U_{i,j}(\mathbf{x}, \tau) + U_{j,i}(\mathbf{x}, \tau))/2,
\end{aligned}
$$

where

$$T_{\alpha\beta}(\mathbf{x}, \tau) = \delta_{\alpha\beta}(\lambda'(x_3) E_{\gamma\gamma}(\mathbf{x}, \tau) + \lambda''(x_3) E_{33}(\mathbf{x}, \tau)) + 2\tilde{\mu}(x_3) E_{\alpha\beta}(\mathbf{x}, \tau), \quad \alpha, \beta \in \{1, 2\},$$

$$(5.9) \quad T_{3\alpha}(\mathbf{x}, \tau) = T_{\alpha 3}(\mathbf{x}, \tau) = 2\mu_0(x_3) E_{3\alpha}(\mathbf{x}, \tau),$$

$$T_{33}(\mathbf{x}, \tau) = \varkappa_0(x_3) E_{33}(\mathbf{x}, \tau) + \lambda''(x_3) E_{\gamma\gamma}(\mathbf{x}, \tau); \quad \mathbf{x} \in \Omega, \ \tau \in [0, \tau_f].$$

From the formal point of view, Eqs. (5.8), (5.9) represent a certain linear elastic body made of a nonhomogeneous anisotropic material endowed with hexagonal symmetry. From the notations (5.7) and (5.2), it follows that the nonhomogenity of this „material" depends on the function $\eta(x_3)$, $x_3 \in (0, h)$, introduced in Section 3 by the filtration procedure. The functions $\tilde{\mu}(x_3)$, $\mu_0(x_3)$, $\varkappa_0(x_3)$, $\lambda'(x_3)$, $\lambda''(x_3)$; $x_3 \in (0, h)$ in Eqs. (5.9) will be called the effective moduli functions; for periodic material structures, by means of $\eta(x_3) = \text{const}$, these functions reduce to the constant effective moduli of the homogenized laminate, as shown in Woźniak [11] and in related papers. The passage to the trivial case $\lambda^l = \lambda^u$, $\mu^l = \mu^u$, $\rho^l = \rho^u$, yields $Q_i(x, \tau) = 0$ for every $x \in \Omega$, $\tau \in [\tau_0, \tau_f]$ and the primary and effective problems coincide.

At the end of this Section we formulate the following

Interface Stress Lemma. The stresses $t_{l3}(\mathbf{x}, \tau)$ in the multilayered composite under consideration can be evaluated by the approximation formula $t_{l3}(\mathbf{x}, \tau) \sim T_{l3}(\mathbf{x}, \tau)$, $\mathbf{x} \in \Omega$, $\tau \in [0, \tau_f]$.

The proof of the lemma can be obtained on the basis of Eqs. (2.3) and the approximation formulae.

6. Conclusions

The main aim of this paper was to derive heterogeneous effective macro-model of certain nonperiodic multilayered media which is plausible from the engineering standpoint and may constitute the basis for the numerical analysis. This macro-model is determined by Eqs. (5.8), (5.9), (5.5) with notations (5.7), (5.2). In order to obtain the deformations and stresses in the multilayered composites under consideration, the following line of approach has to be applied:

1. For the known η_K, $K = 1, \ldots, N$ we formulate the function $\eta_D(\cdot)$ and using the filtration procedure $\eta_D(\cdot) \to \eta(\cdot)$ we pass to the function $\eta(x_3)$, $x_3 \in (0, h)$, cf. Eqs. (3.1), (3.2).

2. Using Eqs. (5.2) and (5.7) we determine the effective moduli functions $\tilde{\mu}(x_3)$, $\mu_0(x_3)$, $\varkappa_0(x_3)$, $\lambda'(x_3)$, $\lambda''(x_3)$ and the mean mass density $\tilde{\rho}(x_3)$; $x_3 \in (0, h)$.

3. We solve the boundary value problem for the macrodisplacements $U_i(\mathbf{x}, \tau)$, $\mathbf{x} \in \Omega$, $\tau \in [0, \tau_f]$, given by Eqs. (5.8), (5.9), (5.5).

4. We determine the correction parameters $Q_i(\mathbf{x}, \tau)$, $\mathbf{x} \in \Omega$, $\tau \in [0, \tau_f]$, using Eqs. (5.6) and bearing in mind notations (5.2).

5. Applying the following approximation formulae:

$$u_i(\mathbf{x}, \tau) \sim U_i(\mathbf{x}, \tau), \quad u_{i,\alpha}(\mathbf{x}, \tau) \sim U_{i,\alpha}(\mathbf{x}, \tau),$$

$$u_{i,3}(\mathbf{x}, \tau) \sim \begin{cases} U_{i,3}(\mathbf{x}, \tau) + (\eta(x_3))^{-1} Q_i(\mathbf{x}, \tau) & \text{if } x_3 \in L \\ U_{i,3}(\mathbf{x}, \tau) - (1 - \eta(x_3))^{-1} Q_i(\mathbf{x}, \tau) & \text{if } x_3 \in U; \end{cases} \tag{6.1}$$

$$t_{\alpha\beta}(\mathbf{x}, \tau) \sim \begin{cases} \lambda^l \delta_{\alpha\beta}(E_{kk}(\mathbf{x}, \tau) + (\eta(x_3))^{-1} Q_3(\mathbf{x}, \tau)) + 2\mu^l E_{\alpha\beta}(\mathbf{x}, \tau) \\ \qquad\qquad \text{if } \mathbf{x} = (\mathbf{x}', x_3) \in \Pi \times L, \\ \lambda^u \delta_{\alpha\beta}(E_{kk}(\mathbf{x}, \tau) + (1 - \eta(x_3))^{-1} Q_3(\mathbf{x}, \tau)) + 2\mu^u E_{\alpha\beta}(\mathbf{x}, \tau) \\ \qquad\qquad \text{if } \mathbf{x} = (\mathbf{x}', x_3) \in \Pi \times U; \end{cases} \tag{6.2}$$

$$\begin{aligned} t_{\alpha 3}(\mathbf{x}, \tau) &\sim T_{\alpha 3}(\mathbf{x}, \tau) = 2\mu_0(x_3) E_{3\alpha}(\mathbf{x}, \tau), \\ t_{33}(\mathbf{x}, \tau) &\sim T_{33}(\mathbf{x}, \tau) = \varkappa_0(x_3) E_{33}(\mathbf{x}, \tau) + \lambda''(x_3) E_{\gamma\gamma}(\mathbf{x}, \tau), \end{aligned} \tag{6.3}$$

we determine the displacements, displacements gradients, strains and stresses in the multilayered composite under consideration.

It has to be emphasized that the procedure given above leads to a plausible description of composites only if the filtration and macro-modelling hypotheses are justified from the engineering point of view. Such situation takes place if the maximum thickness $\varepsilon = \max \varepsilon_K$, $K = 1, \ldots, N$, of a composite layer is relatively small compared with the smallest characteristic length dimension that occurs in the problem $\mathscr{P}$.

We have shown that the interface stress lemma yields a simple interpretation of the mean stress components $T_{i3}(\mathbf{x}, \tau)$. The interpretation of the remaining mean stress components $T_{\alpha\beta}(\mathbf{x}, \tau)$ will be given by the following

MEAN STRESS LEMMA. The stresses $t_{\alpha\beta}(\mathbf{x}, \tau)$ in the multilayered composite under consideration are related to the mean stresses $T_{\alpha\beta}(\mathbf{x}, \tau)$, $\mathbf{x} \in \Omega$, $\tau \in [0, \tau_f]$, by means of the approximation formulae

$$\int_{\zeta_{K-1}}^{\zeta_K} T_{\alpha\beta}(\mathbf{x}, \tau)\, dx_3 \sim \int_{\zeta_{K-1}}^{\zeta_K} t_{\alpha\beta}(\mathbf{x}, \tau)\, dx_3, \quad K = 1, \ldots, N, \quad \mathbf{x} = (\mathbf{x}', x_3) \in \Pi \times (0, h). \tag{6.4}$$

The proof of the lemma can be derived from the proof of the micro-macro-modelling lemma; it will be presented in a separate paper.

We tacitly assume that the mean stress lemma as well as the interface stress lemma hold if the filtration and macro-modelling hypotheses are valid; the approximation $\sim$ has to be understood in the sense introduced by these hypotheses and explained in Sect. 3.

In order to simplify the analysis it has been assumed in Sect. 2 that the composite medium under consideration is made of two isotropic linear elastic

materials and constitutes a thick plate supported on the boundary $\Gamma = \partial\Pi \times (0, h)$. However, the proposed method of modelling can be applied to more general problems, which will be investigated elsewhere. If the stress boundary conditions are given on Γ then the model proposed in this paper can also be applied but it leads to certain discrepancies in the vinicity of Γ. The character of these discrepancies will be shown in the example given below which illustrates the results obtained in this paper.

7. Example

The procedure summarized in Sect. 6 will now be illustrated on the example of the axi-symmetric state of stress related to the x_3-axis of the multilayered composites under consideration. To this end the governing equations of the effective problem presented in Section 5 will be transformed from orthogonal Cartesian coordinates to cylindrical coordinates r, θ, x_3 under the additional assumption that all functions involved are independent of the θ-coordinate. We denote $z \equiv x_3$ and assume $r \in [r_0, r_f]$, $z \in [0, h]$. For the sake of simplicity the considerations will be restricted to the static problem with a constant body force directed along the z-axis. Under this conditions Eqs. (5.8) yield

$$(7.1)\quad \begin{aligned} &T_{rr,r}(r, z) + T_{rz,z}(r, z) + (T_{rr}(r, z) - T_{\theta\theta}(r, z))/r = 0, \\ &T_{rz,r}(r, z) + T_{zz,z}(r, z) + T_{rz}(r, z)/r + g\,\tilde{\rho}(z) = 0, \quad r \in (r_0, r_f), \quad z \in (0, h). \end{aligned}$$

Introducing the additional notation

$$(7.2)\qquad \varkappa(z) \equiv \tilde{\lambda}(z) + 2\tilde{\mu}(z) - [\lambda]^2/(\tilde{\lambda}(z) + 2\tilde{\mu}(z)),$$

from Eqs. (5.9) we obtain

$$(7.3)\quad \begin{aligned} T_{rr}(r, z) &= \varkappa(z) E_{rr}(r, z) + \lambda'(z) E_{\theta\theta}(r, z) + \lambda''(z) E_{zz}(r, z), \\ T_{\theta\theta}(r, z) &= \varkappa(z) E_{\theta\theta}(r, z) + \lambda'(z) E_{rr}(r, z) + \lambda''(z) E_{zz}(r, z), \\ T_{zz}(r, z) &= \varkappa_0(z) E_{zz}(r, z) + \lambda''(z)(E_{rr}(r, z) + E_{\theta\theta}(r, z)), \\ T_{rz}(r, z) &= 2\mu_0(z) E_{rz}(r, z), \quad r \in (r_0, r_f), \quad z \in (0, h), \end{aligned}$$

where

$$(7.4)\quad \begin{aligned} &E_{rr}(r, z) = U_{r,r}(r, z), \quad E_{\theta\theta}(r, z) = U_r(r, z)/r, \\ &E_{zz}(r, z) = U_{z,z}(r, z), \quad E_{rz}(r, z) = (U_{r,z}(r, z) + U_{z,r}(r, z))/2. \end{aligned}$$

Equations (5.6) for the microlocal parameteres now reduce to the single equation

$$(7.5)\qquad Q_z(r,\ z) = -\frac{[\lambda]\,(E_{rr}(r,\ z) + E_{\theta\theta}(r,\ z)) + ([\lambda] + 2[\mu])\,E_{zz}(r,\ z)}{\hat{\lambda}(z) + 2\hat{\mu}(z)},$$

and the approximation formulae (5.11) and (5.12) lead to

$$t_{rr}(r,\ z) \sim \begin{cases} \lambda^l(E_{\theta\theta}(r,\ z)+E_{zz}(r,\ z))+(\lambda^l+2\mu^l)E_{rr}(r,\ z)+\lambda^l(\eta(z))^{-1}Q_z(r,\ z) & \text{if } z\in L, \\ \lambda^u(E_{\theta\theta}(r,\ z)+E_{zz}(r,\ z))+(\lambda^u+2\mu^u)E_{rr}(r,\ z)-\lambda^u(1-\eta(z))^{-1}Q_z(r,\ z) & \text{if } z\in U, \end{cases}$$

$$(7.6)\ t_{\theta\theta}(r,\ z) \sim \begin{cases} \lambda^l(E_{rr}(r,\ z)+E_{zz}(r,\ z))+(\lambda^l+2\mu^l)\,E_{\theta\theta}(r,\ z)+\lambda^l(n(z))^{-1}Q_z(r,\ z) & \text{if } z\in L, \\ \lambda^u(E_{rr}(r,\ z)+E_{zz}(r,\ z))+(\lambda^u+2\mu^u)\,E_{\theta\theta}(r,\ z)-\lambda^u(1-\eta(z))^{-1}Q_z(r,\ z) & \text{if } z\in U, \end{cases}$$

$$t_{zz}(r,\ z) \sim \varkappa_0(z)\,E_{zz}(r,\ z)+\lambda''(z)(E_{rr}(r,\ z)+E_{\theta\theta}(r,\ z)),\quad z\in(0,\ h),$$
$$t_{rz}(r,\ z) \sim 2\mu_0(z)\,E_{rz}(r,\ z),\quad z\in(0,\ h).$$

Equations (7.1)–(7.4) together with the pertinent boundary conditions describe the effective problem for the multilayered composites in the axisymmetric state of stress. The stress components in the particular layers of the composite are determined by the approximation formulae (7.6), where the correction parameter $Q_z(r,\ z)$ is given by Eq. (7.5).

Now assume that the composite under consideration in the undeformed state occupies the infinite region bounded by the coordinate planes $z = 0$, $z = h$ and the cylindrical surface $r = r_0$; hence $r\in[r_0,\ \infty)$. Let the parts $z = 0$ and $r = r_0$ of the boundary be free of stresses, and on the part $z = h$ let the displacements be equal to zero. Thus we deal with a thick laminated plate with a cylindrical hole of a radius r_0 resting on a rigid foundation and subjected to a body force g, cf. Fig. 2. The distribution of the material components in the adjacent layers is determined by the sequence of numbers $\eta_K\in(0,\ 1)$, $K = 1,\ldots,N$; it is assumed that every homogeneous material layer is thin compared with the thickness h of the composite, and hence the number N of layers is sufficiently large. It has to be emphasized that the distribution of material layers may be quite arbitrary and irregular provided that we deal with two homogeneous isotropic linear-elastic materials, the properties of which are determined by the material constants λ^l, μ^l, ρ^l and λ^u, μ^u, ρ^u. The first step of the proposed approach is to derive function $\eta(z)$, $z\in[0,\ h]$ form the sequence $\eta_1,\ldots,\eta_N$, using the filtration procedure. After that, the effective moduli functions $\varkappa(z)$, $\varkappa_0(z)$, $\lambda'(z)$, $\lambda''(z)$, $\mu_0(z)$ and the mean mass density function $\tilde{\rho}(z,\ z\in(0,\ h)$, have to be calculated from Eqs. (5.7) and (7.2), where we bear in mind the

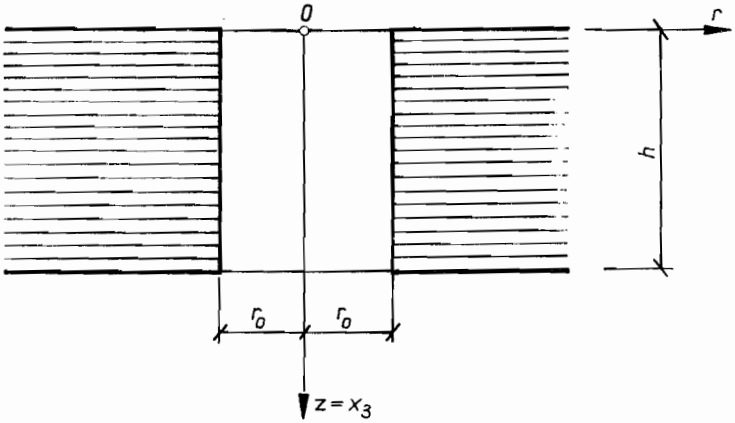

FIG. 2. The composite plate with a cylindrical hole.

notations (5.6). Then the effective boundary problem for the macrodisplacements $U_r(r, z)$, $U_z(r, z)$, $r \in (r_0, \infty)$, $z \in (0, h)$, can be formulated on the basis of Eqs. (7.1.), (7.3), (7.4) and boundary conditions as indicated above. The exact solution to this problem can be obtained by using an approach similar to that applied by LEKHNITSKI, [5], for homogeneous anisotropic materials. It can be shown that the mean stresses will be determined by

$$T_{zz}(z) = -g\int_0^z \tilde{\rho}(\zeta)\,d\zeta, \quad T_{rz}(r, z) = 0,$$

$$T_{rr}(r, z) = \frac{\lambda''(z)}{\varkappa_0(z)}\left(1-\left(\frac{r_0}{r}\right)^2\right) g\int_0^z \tilde{\rho}(\zeta)\,d\zeta, \tag{7.7}$$

$$T_{\theta\theta}(r, z) = \frac{\lambda''(z)}{\varkappa_0(z)}\left(1+\left(\frac{r_0}{r}\right)^2\right) g\int_0^z \tilde{\rho}(\zeta)\,d\zeta, \quad r \in (r_0, \infty), \quad z \in (0, h),$$

After that from Eqs. (7.3) the strain components $E_{rr}(r, z)$, $E_{\theta\theta}(r, z)$, $E_{zz}(r, z)$, can be derived, and by means of

$$E_{zz} = \frac{\varkappa+\lambda'}{\varkappa_0(\varkappa+\lambda') - 2(\lambda'')^2}\,T_{zz} - \frac{\lambda''}{\varkappa_0(\varkappa+\lambda') - 2(\lambda'')^2}\,(T_{rr} + T_{\theta\theta}),$$

$$E_{rr} + E_{\theta\theta} = \frac{\varkappa_0}{\varkappa_0(\varkappa+\lambda') - 2(\lambda'')^2}\,(T_{rr} + T_{\theta\theta}) - \frac{2\lambda''}{\varkappa_0(\varkappa+\lambda') - 2(\lambda'')^2}\,T_{zz}, \tag{7.8}$$

the correction parameter $Q_z(r, z)$ can be obtained from Eq (7.5). At last, the stresses $t_{rr}(r, z)$, $t_{\theta\theta}(r, z)$, $t_{zz}(r, z)$ in the material components of the composite can be evaluated from the approximation formulae (7.6). This simple example of the stress analysis in the multilayered composite shows that the method proposed is effective and can be applied to engineering problems.

It can be observed that the stresses $t_{rr}(r, z)$ in the aforementioned example do not satisfy the boundary condition $t_{rr}(r_0, z) = 0$ on the cylindrical surface $r = r_0$, which was assumed to be free of tractions. However, from the mean stress lemma and by virtue of $T_{rr}(r_0, z) = 0$, $z \in (0, h)$, we obtain

$$\int_{\zeta_{K-1}}^{\zeta_K} t_{rr}(r_0, z)\, dz = 0, \quad K = 1, \ldots, N.$$

Hence the resultants of the boundary tractions on the surface $r = r_0$ related to every strip (ζ_{K-1}, ζ_K) of this surface are equal to zero. It can be also shown that the suitable resultant couples within the approximation introduced by the proposed model are equal to zero. Thus on every strip $\zeta_{K-1} < z < \zeta_K$, $K = 1, \ldots, N$, of the cylindrical boundary surface $r = r_0$ we deal with the self-equilibrated system of tractions which disturb the proper description of stresses only in the very narrow vicinity of the boundary. If the boundary conditions on $r = r_0$ are assumed in the form $U_r(r_0, z) = 0$, $T_{rz}(r_0, z) = 0$, $z \in (0, h)$, or in the form of arbitrary displacement conditions, such discrepancy does not take place.

Appendix

We outline here the basic ideas of the nonstandard analysis [8, 2, 12, 11] which are used in the paper. The basic statements are:

(i) *Extension Principle.* Every mathematical entity E (number, set, function etc.) extends naturally and uniquely within the nonstandard analysis to the entity $^*E$, which is called a standard entity.

(ii) *Transfer Principle.* Every mathematical statement that is meaningful and true remains also meaningful and true within the scope of the nonstandard anaysis.

(iii) *Enlargement Principle.* If the entity E is an infinite set then $^*E$ contains also nonstandard entities (entities that cannot be derived as standard entities).

From (i) it follows that in the nonstandard analysis we deal with a certain system $^*\mathbf{R}$ of real numbers; since $^*\mathbf{R}$ is infinite then (iii) implies that $^*\mathbf{R}$ also comprises the nonstandard numbers. Using (ii) we can show that $^*\mathbf{R}$ contains infinitely large, infinitely small as well as standard and near-standard real numbers. Every near-standard number is a uniquely determined sum of standard and infinitely small (positive or negative) number. Hence to every near-standard number a (which is a finite number) is assigned a standard number ^0a which is called the standard part of a.

The foundations of nonstandard analysis can be found in [8, 2]; for the applications to mechanics the reader is referred to [11,12].

Reference

1. A. Bensoussan, J. L. Lions and G. Papanicolau, *Asymptotic anaysis for periodic structures*, North Hol. Publ. Comp., Amsterdam 1978.
2. M.Davies, *Applied nonstandard analysis*, J. Wiley, New York—Toronto 1976.
3. G. Duvaut and J. L. Lions, *Les inéquations en mecanique et en physique*, Dunod, Paris 1972.
4. A. C. Eringen and E. S. Suhubi, Int. J. Engng Sci., **2** 189—205 and 389—404, 1964.
5. S. G. Lekhnitski, *Theory of elasticity of an anisotropic body* [in Russian], Gos. Izd. Tech. Teor. Lit., Moskva—Leningrad 1950
6. C. C. Mei and J. L. Auriault, Proc. Roy. Soc. London, 1989.
7. Z. Naniewicz, *Bull. Acad. Polon. Sci., Série Sci. Tech.*, **35**, 399—409, 1987.
8. A. Robinson, *Nonstandard analysis*, North Holl. Publ. Comp., Amsterdam 1966.
9. Cz. Rymarz, J. Tech. Phys., **23**, 277—285, 1976.
10. C. T. Sun, J. D. Achenbach and G. Hermann, J. Appl. Mech., **35**, 467—475, 1968.
11. Cz. Woźniak, Int. J. Engng. Sci., **25**, 483—498, 1987.
12. Cz. Woźniak, Adv. in Mech., **9**, 3—35, 1986.

POLISH ACADEMY OF SCIENCES
INSTITUTE OF FUNDAMENTAL TECHNOLOGICAL RESEARCH.

Received December 27, 1990.