HAL open science

Renewable energy for sustainable agriculture

Chel, Kaushik

To cite this version:

Chel, Kaushik. Renewable energy for sustainable agriculture. Agronomy for Sustainable Development, 2011, 31 (1), pp.91-118. 10.1051/agro/2010029 . hal-00930477

HAL Id: hal-00930477

https://hal.science/hal-00930477v1

Submitted on 11 May 2020

HAL is a multi-disciplinary open access archive for the deposit and dissemination of scientific research documents, whether they are published or not. The documents may come from teaching and research institutions in France or abroad, or from public or private research centers.

L'archive ouverte pluridisciplinaire **HAL**, est destinée au dépôt et à la diffusion de documents scientifiques de niveau recherche, publiés ou non, émanant des établissements d'enseignement et de recherche français ou étrangers, des laboratoires publics ou privés.

Agron. Sustain. Dev. (2011) 31:91–118
© INRA, EDP Sciences, 2010
DOI: 10.1051/agro/2010029

Review article

Renewable energy for sustainable agriculture

A. CHEL[1]*, G. KAUSHIK[2]

[1] Centre for Energy Studies, Indian Institute of Technology Delhi, India
[2] Centre for Rural Development & Technology, Indian Institute of Technology Delhi, India

(Accepted 30 April 2010)

Abstract – Agriculture is the sole provider of human food. Most farm machines are driven by fossil fuels, which contribute to greenhouse gas emissions and, in turn, accelerate climate change. Such environmental damage can be mitigated by the promotion of renewable resources such as solar, wind, biomass, tidal, geo-thermal, small-scale hydro, biofuels and wave-generated power. These renewable resources have a huge potential for the agriculture industry. The farmers should be encouraged by subsidies to use renewable energy technology. The concept of sustainable agriculture lies on a delicate balance of maximizing crop productivity and maintaining economic stability, while minimizing the utilization of finite natural resources and detrimental environmental impacts. Sustainable agriculture also depends on replenishing the soil while minimizing the use of non-renewable resources, such as natural gas, which is used in converting atmospheric nitrogen into synthetic fertilizer, and mineral ores, e.g. phosphate or fossil fuel used in diesel generators for water pumping for irrigation. Hence, there is a need for promoting use of renewable energy systems for sustainable agriculture, e.g. solar photovoltaic water pumps and electricity, greenhouse technologies, solar dryers for post-harvest processing, and solar hot water heaters. In remote agricultural lands, the underground submersible solar photovoltaic water pump is economically viable and also an environmentally-friendly option as compared with a diesel generator set. If there are adverse climatic conditions for the growth of particular plants in cold climatic zones then there is need for renewable energy technology such as greenhouses for maintaining the optimum plant ambient temperature conditions for the growth of plants and vegetables. The economics of using greenhouses for plants and vegetables, and solar photovoltaic water pumps for sustainable agriculture and the environment are presented in this article. Clean development provides industrialized countries with an incentive to invest in emission reduction projects in developing countries to achieve a reduction in CO_2 emissions at the lowest cost. The mechanism of clean development is discussed in brief for the use of renewable systems for sustainable agricultural development specific to solar photovoltaic water pumps in India and the world. This article explains in detail the role of renewable energy in farming by connecting all aspects of agronomy with ecology, the environment, economics and societal change.

1. INTRODUCTION

1.1. Sustainable agriculture

Sustainable agriculture is an alternative for solving fundamental and applied issues related to food production in an ecological way (Lal, 2008). It has its roots in a set of values that reflects an awareness of both ecological and social realities. It involves design and management procedures that work with natural processes to conserve all resources and minimize waste and environmental damage, while maintaining or improving farm profitability. Working with natural soil processes is of particular importance. Sustainable agriculture systems are designed to take maximum advantage of existing soil nutrient and water cycles, energy flows, beneficial soil organisms, and natural pest controls. By capitalizing on existing cycles and flows, environmental damage can be avoided or minimized. Such systems also aim to produce food that is nutritious, and uncontaminated with products that might harm human health. Using a great variety of farming strategies allows producers to meet their needs: in their operations, their environments and their communities. The primary goals of sustainable agriculture (Lichtfouse et al., 2009) include:

- ➢ providing a more profitable farm income;
- ➢ promoting environmental stewardship, including:
  - – protecting and improving soil quality;
  - – reducing dependence on non-renewable resources, such as fuel and synthetic fertilizers and pesticides; and
  - – minimizing adverse impacts on safety, wildlife, water quality and other environmental resources;
- ➢ promoting stable, prosperous farm families and communities.

"The best way to communicate the meaning of sustainable agriculture is through real-life stories of farmers who are

* Corresponding author: dr.arvindchel@gmail.com

developing sustainable farming systems on their own farms" as stated by John Ikerd, Agricultural Economist, Emeritus, University of Missouri.

Never on earth has food been produced on such a large scale and with such intensive use of land, to satisfy the needs of a growing global population. Agriculture worldwide contributes significantly to unsustainable levels of chemicals in fertilizers and pesticides, and also to the combustion of large amounts of non-renewable fossil fuel, through farm processes, and the transportation of food from field to dinner plate.

In the hot summer months, when the sun shines, the wind often does not blow. During the cool and cloudy fall and winter seasons, wind speeds are often at their highest. If the site is accommodating these climatic features then combining wind and solar can be an effective renewable energy system. Harnessing renewable energy systems in agriculture is termed as clean energy farming as reported by SARE (2006).

1.2. Principles of agricultural sustainability

Corwin et al. (1999) established that the concept of sustainable agriculture is predicated on a delicate balance of maximizing crop productivity and maintaining economic stability, while minimizing the utilization of finite natural resources and detrimental environmental impacts. Agricultural sustainability is a societal goal to be pursued forever and for everyone and guided by general principles. The following principles reported by Gerber (1992) are offered for purposes of discussion in this chapter.

(1) A sustainable agricultural system is based on the prudent use of renewable and/or recyclable resources. A system which depends on exhaustible (finite) resources such as fossil fuels cannot be sustained indefinitely. A sustainable system would use renewable energy sources such as biological, geothermal, hydroelectric, solar or wind. Use of recyclable resources such as groundwater at rates greater than recharge depletes reserves and cannot be sustained.
(2) A sustainable agricultural system protects the integrity of natural systems so that natural resources are continually regenerated. The current thinking focuses on reducing the rate of degradation of natural and agricultural ecosystems. A system will not be sustainable as long as the goal is simply to decrease the rate of its degradation. Sustainable agricultural systems should maintain or improve groundwater and surface water quality and regenerate healthy agricultural soils.
(3) A sustainable agricultural system improves the quality of life of individuals and communities. In order to stem the rural to urban migration, rural communities must offer people a good standard of living including diverse employment opportunities, health care, education, social services and cultural activities. Young people must be afforded opportunities to develop rural enterprises, including farming, in ways which care for the land so that it may be passed onto future generations in as good as or better condition than it was received.
(4) A sustainable agricultural system is profitable. Transition to new ways of knowing, doing and being require incentives for all participants. Some of these incentives are necessarily economic. Systems and practices that do not include profitability as one of the prime motivators will not be voluntarily implemented.
(5) A sustainable agricultural system is guided by a land ethic that considers the long-term good of all members of the land community. Holistic or whole-system analysis views an agro-ecosystem as a dynamic community of soil, water, air and biotic species. All parts are important because they contribute to the whole. This ethic strives to protect the health of the land community that is its capacity for self-renewal.

Farmers and ranchers can choose many ways to improve their sustainability, and these vary from region to region, state to state and farm to farm. However, some common sets of practices have emerged, many of them aimed at greater use of on-farm or local resources. Some of those practices are illustrated here, each contributing in some way to long-term farm profitability, environmental stewardship and improved quality of life.

1.2.1. Precision agriculture

Precision agriculture is a key crop management system to achieve agricultural sustainability through the use of new information technologies.

1.2.2. Integrated pest management (IPM)

IPM is an approach to managing pests by combining biological, cultural, physical and chemical tools in a way that minimizes economic, health and environmental risks.

1.2.3. Rotational grazing

Management-intensive grazing systems take animals out of the barn and into the pasture to provide high-quality forage and reduced feed costs while avoiding manure buildup.

1.2.4. Soil conservation

Many soil conservation methods, including strip cropping, reduced tillage and no-till, help prevent loss of soil due to wind and water erosion.

1.2.5. Water quality/wetlands

Water conservation and protection have become important parts of agricultural stewardship. Practices such as planting riparian buffer strips can improve the quality of drinking and surface water, as well as protect wetlands.

1.2.6. Cover crops

Growing plants such as rye, clover or vetch after harvesting a grain or vegetable crop or intercropping them can provide several benefits, including weed suppression, erosion control and improved soil nutrients and soil quality.

1.2.7. Crop/landscape diversity

Growing a greater variety of crops and livestock on a farm can help reduce risks from extremes in weather, market conditions or pests. Increased diversity of crops and other plants, such as trees and shrubs, can also contribute to soil conservation, wildlife habitat and increased populations of beneficial insects.

1.2.8. Nutrient management

Proper management of manure, nitrogen and other plant nutrients can improve the soil and protect the environment. Increased use of on-farm nutrient sources, such as manure and leguminous cover crops, also reduces purchased fertilizer costs.

1.2.9. Agro-forestry

Agro-forestry covers a range of tree uses on farms, including inter-planting trees (such as walnuts) with crops or pasture, growing shade-loving specialty crops in forests, managing woodlots and windbreaks better, and using trees and shrubs along streams as buffer strips.

1.2.10. Alternative marketing

Farmers and ranchers across the country are finding that innovative marketing strategies can improve profits. Direct marketing of agricultural goods may include selling at farmers' markets, roadside stands or through the World Wide Web, delivering to restaurants and small grocers, and running community-supported agriculture.

1.2.11. Enterprises for sustainable agriculture

Some of the examples of enterprises for sustainable agriculture could be as follows:

- the sustainable agriculture research & education (SARE) program (www.sare.org);
- appropriate technology transfer for rural areas (ATTRA) (www.attra.ncat.org);
- the alternative farming systems information center (AFSIC). (www.nal.usda.gov/afsic).

1.3. Introduction to renewable energy resources

Nowadays, the development of a sustainable indicators framework towards sustainable energy policy-making should be characterized by clarity and transparency. Although energy policy-making has been the subject of many researchers, studies proposing an appropriate framework of sustainable indicators that have to be used are not present in the international literature. The purpose of the current paper is to present an integrated review of the methodologies and the related activities of the energy indicators and to recommend an operational framework of appropriate indicators, thus supporting the policy-makers/analysts/citizens towards a sustainable energy policy-making (Patlitzianas et al., 2008). The sustainable energy approach promotes renewable energy in the agriculture sector, especially in remote or rural areas all over the world where solar energy is available in abundance.

1.3.1. Renewable resources

A natural resource qualifies as a renewable resource if it is replenished by natural processes at a rate comparable with or faster than its rate of consumption by humans. Solar radiation, tides, winds and hydroelectricity are perpetual resources that are in no danger of long-term availability. Some natural renewable resources such as geothermal power, fresh water, timber and biomass must be carefully managed to avoid exceeding the environment's capacity to replenish them. A life cycle assessment provides a systematic means of evaluating renewability. The term has a connotation of sustainability of the natural environment. Gasoline, coal, natural gas, diesel, and other commodities derived from fossil fuels are non-renewable. Unlike fossil fuels, a renewable resource can have a sustainable yield.

1.3.2. Renewable energy

Renewable energy technologies are ones that consume primary energy resources that are not subject to depletion. Examples of renewable technologies include solar energy, wind energy, geothermal energy and biomass. Given this definition and the fact that water supplies are replenished in the annual hydrologic cycle, hydropower is considered part of the mix of renewable technologies (Frey and Linke, 2002).

Solar energy is the energy derived directly from the Sun. Along with nuclear energy, it is the most abundant source of energy on Earth. The fastest growing type of alternative energy, increasing at 50 percent a year, is the photovoltaic cell, which converts sunlight directly into electricity. The Sun delivers yearly more than 10 000 times the energy that humans currently use.

Sustainable energy is energy that, in its production or consumption, has minimal negative impacts on human health and the healthy functioning of vital ecological systems, including the global environment. It is an accepted fact that renewable energy is a sustainable form of energy, which has attracted more attention during recent years. A great amount

of renewable energy potential and environmental interest, as well as economic consideration of fossil fuel consumption and high emphasis on sustainable development for the future will be needed. Nearly a fifth of all global power is generated by renewable energy sources, according to a book published by the IEA (2003). The power generation from renewables, their status and prospects claim that they are the second largest power source after coal (39%) and ahead of nuclear (17%), natural gas (17%) and oil (8%) (Omer, 2008). From 1973–2000 renewables grew at 9.3% a year, and it is predicted that this will increase 10.4% a year to 2010 (Omer, 2008). Wind power grew fastest at 52% and will multiply by seven times to 2010, overtaking biopower (Omer, 2008). The reduction in greenhouse gas emissions can be achieved by production of environmentally-friendly power generation technologies (e.g. wind, solar, fuel cells, etc.). The challenge is to match leadership in greenhouse gas reduction and production of power from renewable energy resources by developing a major research and manufacturing capacity of environmentally-friendly technologies (Omer, 2008).

More than 50% of the world's area is classified as arid, representing the rural and desert parts, which lack electricity and water networks. The inhabitants of such areas obtain water from borehole wells by means of water pumps, which are driven by diesel engines. The diesel motors are associated with maintenance problems, high running cost and environmental pollution. Alternative methods are pumping by PV or wind systems. Renewable sources of energy are regional and site-specific. It has to be integrated in the regional development plans (Omer, 2008).

Wind power is derived from uneven heating of the Earth's surface from the Sun and the warm core. Most modern wind power is generated in the form of electricity by converting the rotation of turbine blades into electrical current by means of an electrical generator. In windmills (a much older technology) wind energy is used to turn mechanical machinery to do physical work, such as crushing grain or pumping water.

Hydropower is energy derived from the movement of water in rivers and oceans (or other energy differentials), and can likewise be used to generate electricity using turbines, or can be used mechanically to do useful work. It is a very common resource.

Geothermal power directly harnesses the natural flow of heat from the ground. The available energy from natural decay of radioactive elements in the Earth's crust, and mantle is approximately equal to that of incoming solar energy, especially during the day.

Alcohol derived from corn, sugar cane, switch grass, etc. is also a renewable source of energy. Similarly, oils from plants and seeds can be used as a substitute for non-renewable diesel. Methane is also considered as a renewable source of energy.

1.3.3. Energy use in agriculture

The various sources of energy, e.g. solar, wind, hydraulic, biomass, organic wastes, biofuels, and combined heat and power provide a simple, sustainable, effective solution for the conservation of valuable non-renewable fossil resources without resulting in environmental pollution.

Figure 1. Rice husk-based combined heat and power (CHP) electric generator.

Solar energy can be utilized in its varied forms, e.g. solar PV, direct solar thermal, and renewable fuels and wind can offer the solution to the world's energy problems and ultimately make the environment sustainable for future generations by reducing environmental pollution from fossil fuel energy usage. Table I shows the sources of renewable energy in agricultural farms.

The rice husk-based combined heat and power (CHP) electric generator is shown in Figure 1, which was commissioned by Khadi village and industries commission (KVIC) in Masudpur village in Delhi. The CHP Stirling engine has a rating of 5 horse power and 720 rpm (Model ST-5) with maximum pressure and temperature of 5 bar and 700 °C, respectively, and maximum cooling water temperature outlet of 60 °C. The CHP engine is manufactured by Stirling Dynamics Pvt. Ltd., Madras (Chennai).

Solar radiation arriving on earth is the most fundamental renewable energy source in nature. It powers the biosystem, the ocean and atmospheric current system and affects the global climate (Omer, 2008). Reliable radiation information is needed to provide input data in modeling solar energy devices and a good database is required in the work of energy planners, engineers and agricultural scientists (Omer, 2008).

Energy in agriculture is important in terms of crop production and agro-processing for adding value. Human, animal and mechanical energy is extensively used for crop production in agriculture. Energy requirements in agriculture are divided into two groups, being direct and indirect. Direct energy is required to perform various tasks related to crop production processes such as land preparation, irrigation, interculture, threshing, harvesting, and transportation of agricultural inputs and farm produce. It is seen that direct energy is directly used on farms and on fields. Indirect energy, on the other hand, consists of the energy used in the manufacture, packing and transport of fertilizers, pesticides, seeds and farm machinery (Tab. II). As the name implies, indirect energy is not directly used on the

Table I. Sources of renewable energy in agricultural farms (Omer, 2008).

Energy source	Technology	Size
Solar energy	Domestic solar water heaters	Small
	Solar water heating for large demands	Medium-large
	PV roof grid-connected systems generating electric energy	Medium-large
Wind energy	Wind Turbines (grid-connected)	Medium-large
Hydraulic energy	Hydro plants in derivation schemes	Medium-small
	Hydro plants in existing water distribution networks	Medium-small
Biomass	High efficiency wood boilers	Small
	CHP plants fed by agricultural wastes or energy crops	Medium
Animal manure	CHP plants fed by biogas	Small
Combined heat and power (CHP)	High efficiency lighting	Wide
	High efficiency electricity	Wide
	Householders' appliances	Wide
	High efficiency boilers	Small-medium
	Plants coupled with refrigerating absorption machines	Medium-large

farm. Calculating energy inputs in agricultural production is more difficult in comparison with the industry sector due to the high number of factors affecting agricultural production. However, a considerable number of studies have been conducted in different countries on energy use in agriculture (Omer, 2008; Yaldiz et al., 1993; Baruah, 1995; Thakur and Mistra, 1993).

2. NEED FOR SOLAR/WIND ENERGY TECHNOLOGIES IN AGRICULTURE

It is common to use kerosene, diesel or propane to power generators in agricultural operations. While these systems can provide power where needed, there are some significant drawbacks, including:

- fuel has to be transported to the generator's location, which may be quite a distance over some challenging roads and landscape;
- their noise and fumes can disturb livestock;
- fuel costs add up, and spills can contaminate the land;
- generators require a significant amount of maintenance and, like all mechanical systems, they break down and need replacement parts that are not always available.

2.1. Advantages of solar energy system

Renewable energies represent a cornerstone to steer our energy system in the direction of sustainability and supply security. Generating electricity, heat or biofuels from renewable energy sources has become a high priority in the energy policy strategies at a national level as well as on a global scale. Challenging goals for these "new" supply options to meet our energy demands have been set, e.g. at the European level by the commitment of meeting 20% of the overall energy demand from renewable energy sources by 2020. Solar energy is one of the renewable energy resources widely used in the agriculture sector for various applications (Gustav et al., 2008).

For many agriculture needs, the alternative is solar energy. Modern, well-designed, simple-to-maintain solar systems can

Table II. The equivalent indirect energy input in agriculture (Omer, 2008).

Input	Unit	Equivalent energy (MJ)
1. Human labour	h	2.3
2. Animal labour		
Horse	h	10.1
Mule	h	4.04
Donkey	h	4.04
Cattle	h	5.05
Water buffalo	h	7.58
3. Electricity	kW h	11.93
4. Diesel	Litre	56.31
5. Chemicals fertilisers		
Nitrogen	kg	64.4
P_2O_5	kg	11.96
K_2O	kg	6.7
6. Seed		
Cereals and pulses	kg	25
Oil seed	kg	3.6
Tuber	kg	14.7
Output		
7. Major products		
Cereal and pulses	kh	14.7
Sugar beet	kg	5.04
Tobacco	kg	0.8
Cotton	kg	11.8
Oil seed	kg	25
Fruits	kg	1.9
Vegetables	kg	0.8
Water melon	kg	1.9
Onion	kg	1.6
Potatos	kg	3.6
Olive	kg	11.8
Tea	kg	0.8
8. By products		
Husk	kg	13.8
Straw	kg	12.5
Cob	kg	18.0
Seed cotton	kg	25.0

provide the energy that is needed at the given location and for the given time period. These are systems that have been tested and proven around the world to be cost-effective and reliable, and they are already raising levels of agricultural productivity worldwide (Gustav et al., 2008).

In general, there are two types of solar systems – those that convert solar energy into direct current power and those that convert solar energy into heat. Both types have many applications in agricultural settings, making life easier and helping to increase the operation's productivity (Gustav et al., 2008).

The advantages of solar energy applications are as follows:

- no fuel, low running costs;
- modular nature;
- long life;
- reliability;
- low maintenance;
- clean energy, avoids greenhouse gas emissions.

2.1.1. Photovoltaic for electricity generation

Solar cells convert sunlight into direct current electricity using the photovoltaic effect. The solar cells in a photovoltaic module are made from semiconductor materials. When light energy strikes the cell, electrons are knocked loose from the material's atoms. Electrical conductors attached to the positive and negative sides of the material allow the electrons to be captured in the form of a direct current. This electricity can then be used to power a load, such as a water pump, or it can be stored in a battery.

It is a simple fact that photovoltaic modules produce electricity only when the sun is shining, so some form of energy storage is necessary to operate systems at night. One can store the energy as water by pumping it into a tank while the sun is shining and distributing it by gravity when it is needed after dark. For electrical applications at night, one will need a battery to store the energy generated during the day.

Photovoltaic is a well-established, proven technology with a substantial international industry network. The photovoltaic systems are increasingly more cost-effective compared with either extending the electrical grid or using diesel generators in remote locations. The cost per peak watt of today's photovoltaic power is about \$1 to \$5 per peak wattage of the photovoltaic system (W_P).

Photovoltaic systems are very economical in providing electricity in remote locations on farms, ranches, orchards and other agricultural operations. PV systems can be much cheaper than installing power lines and step-down transformers in applications such as electric fencing, area or building lighting, and water pumping either for livestock watering or crop irrigation.

In fact, water pumping is one of the simplest and most appropriate uses for photovoltaic. From crop irrigation to stock watering to domestic uses, photovoltaic-powered pumping systems meet a broad range of water needs. Most of these systems have the added advantage of storing water for use when the sun is not shining, eliminating the need for batteries, enhancing simplicity and reducing overall system costs.

Powering electric fans for air circulation is another application of photovoltaic. Modern pig and poultry farms double and even triple production by raising the animals in enclosed buildings. Another good use of photovoltaic is for lighting in agricultural buildings and enclosures. Running electrical wiring from the grid to an outbuilding can be an expensive alternative. Electric lighting using solar photovoltaic in these buildings can significantly extend working hours and increase productivity. This is especially true for those who use precious evening hours for equipment repair and maintenance.

The photovoltaic systems can be more economical choices than conventional battery-powered fixtures, flashlights and fuel lamps. In addition, they provide more light, higher quality light, and emit no smoke or fumes. Other appropriate applications for PV systems on farms, ranches and orchards include:

- power for feed or product grinding;
- electric-powered egg collection and handling equipment;
- product refrigeration;
- livestock feeder and sprayer motors and controls;
- compressors and pumps for fish farming;
- electric fencing to contain livestock;
- battery charging.

2.1.2. Solar thermal applications

The second most widely used application of solar energy is to produce heat, which has applications for various agricultural processes as follows:

- Drying crops and grains by simply exposing them to the heat of the sun is one of the oldest and most widely used applications of solar energy. But allowing crops to dry naturally in the field exposes them to the elements and contamination as well as birds and insects.
- Modern solar crop driers are still very simple, but also more effective and hygienic. The basic components of a solar dryer are an enclosure or shed, screened drying racks or trays, and a solar collector. The collector can be as simple as a glazed box with a dark-colored interior to absorb the solar energy that heats air. The heated air in the collector moves, by natural convection or a fan, up through the material to be dried.
- Another use of solar energy for higher agricultural productivity is water heating – particularly in livestock operations. If one is raising poultry, pens and equipment must be cleaned periodically. Simple solar water heaters are available to provide low to medium temperature hot water for this purpose. These systems require a solar collector, a storage tank, plumbing and pumps. Commercially available systems are widely available and offer simple installation. Cleanliness is essential in the case of processing poultry in farms. Again, a commercially available solar water heater can provide water at 60 °C in any amount needed.

2.2. Wind energy agricultural applications

Other renewable energy sources such as wind energy can also be used in agriculture. Small wind systems can provide

power that can be used directly or stored in batteries. These systems are very reliable in areas that get enough consistent wind. The systems can be very cost-effective and reliable for many power needs on farms and ranches.

2.2.1. Water pumping using wind turbine

Wind turbine electricity generation can be used to raise the living standard of rural dwellers by improving agricultural productivity. Wind turbine has significant benefit in the areas where there is a shorter rainy season and hence demand for pumped water. After installing wind turbine water pumps in a farm, one can raise higher value crops throughout the year and also supply water to the livestock. There is the requirement of appropriate training for the local farmers to use wind turbine-based water pump irrigation. At present, mostly fossil fuel-powered water pumps are used in the farms. However, very few wind-powered water pumps are installed in the world, e.g. a wind turbine water pump in Nigeria in Goronyo in Katsina State, Kedada in Bauchi State and in Sokoto State. Presently, a 5 kW pilot wind turbine/generator is installed in Sayya Gidan-Gada village in Sokoto State, Nigeria. Other applications of wind power using water pumps are: domestic water supply, water supply for livestock, drainage, salt ponds, fish farms, etc.

2.2.2. Electricity generation from wind turbine

The demand for electricity is growing with the increase in population, especially in rural areas which are not connected to the electrical grid. Therefore, provision of electricity to the remote rural communities can be made cheaply at the start from a wind power system as compared with other options, e.g. extension of grid power lines or other types of fossil fuel which are hard to transport due to poor road networks to the rural communities. Wind energy needs to be promoted first to the farms which are in great need of electricity to contribute significant improvement in the crop yield from agriculture. Small, highly efficient wind turbines can be installed in rural farms. The cost of installing one wind turbine is close to that of putting up electrical poles, overhead power lines and other equipment necessary to connect to the electrical grid. The advantage is that the farm owner owns the generating equipment and is freed from paying monthly electrical bills. monthly electrical bills!

2.2.3. Grinding grains and legumes using windmills

Wind energy can be used for grinding grains and legumes. Long before the invention of electricity, early wind turbines did very useful work for grinding. Windmills were used in many places in Europe over the last several centuries to turn heavy granite disks called millstones. The millstones were used to crush dry grains such as wheat, barley and corn to make flour or meal. This technique can be applied on farms for production of flour.

2.2.4. Environmental impact of wind energy farming

Wind energy farming is an environmentally-friendly option, with the following features:

- it is pollution-free: reduces air and noise pollution;
- it does not require fuel for operation;
- it does not produce toxic or radioactive waste;
- it does not create greenhouse gases (each mega-watt hour generated by wind energy helps to reduce 0.8 to 0.9 tonnes/year of greenhouse gas emissions that are produced by coal or fossil fuel generation each year);
- reduces concentrations of CO_2, SO_2, NO_X, thereby reducing acid rain;
- concerns about noise pollution and "visual pollution" of the landscape;
- when large arrays of wind turbines are installed on farmland, only about 2% of the land area is required for the wind turbines. The rest is available for farming, livestock, and other uses;
- birds could be killed when they run into the turbine.

2.2.5. Economic feasibility of wind energy farms

- Landowners, farmers and ranchers often receive payments for the use of their land, which enhances their income and increases the value of the land.
- Operational and maintenance cost is low.
- Zero input fuel cost.
- It is domestic, reducing the need for importation of fossil fuels. This helps in reducing gas emission from transportation of fuels.

2.2.6. Social and cultural acceptability of wind farms

- Low level of awareness among people, as a result of the low level of education among the populace, especially in the rural communities; it would take quite some time before a general awareness could be created in the people about the usefulness of wind technology.
- There could be tension over land between landowners and government or private companies over the installation of wind turbines due to the lack of awareness about the benefits of wind farms in local communities.

2.2.7. Shortcomings of wind power installations

The shortcomings of wind energy use in agriculture are numerous; however, a few have been highlighted as follows:

1. High cost of installation: To install a wind turbine on the farm by a local farmer is an expensive venture. Many are involved in subsistence agriculture and so cannot afford to install one. For example, a 10 kW turbine, which is the most common size for a home, will typically cost (US) \$22 000–29 000. This amount is very large for the average

farmer. However, the installation can be done by the local government or private companies who lease the land from the owner and in turn pay rent to the farmer.

2. Lack of spare parts: Presently, wind turbines and components are not manufactured in all parts of the world and so getting spare parts to replace any damaged or old parts can be a problem. To get these components would result in importation. This would result in the emission of poisonous gases during transportation of these parts.
3. Lack of skilled technical experts to repair the turbine in case of damage: Due to lack of many wind turbines in many parts of the world, there are not many trained and skilled technical experts that can repair these turbines when there is damage. This means that there would be a need to bring in foreign experts to repair and maintain wind turbines. This is not a sustainable approach as the maintenance of these turbines would depend largely on the importation of expatriates who would likely be paid more than what a local engineer could charge.
4. Low Level of Public Awareness: The public awareness of renewable energy sources and technologies in many parts of the world and benefits, both economic and environmental, is generally low. Consequently, the public is not well-equipped to influence the government to begin to take more decisive initiatives in enhancing the development, application, dissemination and diffusion of renewable energy resources and technologies in the national energy market.
5. General absence of comprehensive national energy policy: Many parts of the world lag in formulation of a comprehensive energy policy; only sub-sectoral policies have been formulated. Since such a policy is pivotal to using energy-efficient renewable energy technologies, this has, to a large extent, contributed to the lack of attention paid to the renewable energy technologies.

2.3. Recommendations and policy development for renewable energy resources

There is high potential for both solar and wind energy in various parts of the world, especially in India. Hence, the following recommendations are hereby made to further help formulate strategies and measures in implementing all renewable energy projects.

- To embark on a massive education program to enlighten the citizens, particularly in the rural communities, about the benefits of renewable energy sources.
- To develop, promote and harness the renewable energy resources of the country and incorporate all viable ones into the national energy mix.
- Provide various opportunities to the communities and allow them to choose the best renewable source of energy suitable for them.
- To promote decentralized energy supply, especially in rural areas, based on renewable energy resources.
- To de-emphasize and discourage the indiscriminate use of fossil fuels and wood.
- To promote efficient methods in the use of wind energy resources.
- To keep abreast of international developments in renewable energy technologies and applications.

3. RENEWABLE ENERGY APPLICATIONS FOR SUSTAINABLE AGRICULTURE

Energy is one of the major parameters for establishing growth and progress of a country, rather than the standard of living, which depends directly upon the per capita energy consumption. An analysis of the distribution of the major energy forms in rural India reveals that out of 11.42×10^{12} kcal, the share of non-commercial energy is 65%, human and animal energy 15% and commercial energy 20%: thus, 80% of rural energy is met from renewable sources. Most of the energy on the Earth is received from the Sun. Solar energy creates circulation of wind and ocean water, and causes water evaporation and consequent precipitation. Plants use solar energy for photosynthesis and store carbohydrates, protein, fats, oils, alcohols, cellulose and lignin. Humans and animals consume plant materials as primary food to utilize their digestive energy. Plant and animal remains are converted into coal and petroleum products over millions of years, which provide the main energy sources for modern life.

3.1. Detailed agricultural applications of solar energy

Solar energy can supply and/or supplement many farm energy requirements. The following is a brief discussion of a few applications of solar energy technologies in agriculture.

3.1.1. Crop and grain drying

Using the sun to dry crops and grain is one of the oldest and most widely used applications of solar energy. Farmers have been using the sun to dry crops for centuries. The simplest and least expensive technique is to allow crops to dry naturally in the field, or to spread grain and fruit out in the sun after harvesting. The disadvantage of these methods is that the crops and grain are subject to damage by birds, rodents, wind and rain, and contamination by windblown dust and dirt. However, solar dryers are designed to provide protection from insects, rodents and birds, as well as weather. More sophisticated solar dryers protect grain and fruit, reduce losses, dry faster and more uniformly, and produce a better quality product than open-air methods. A basic solar dryer consists of an enclosure or shed, screened drying trays or racks, and a solar collector. The design of a solar crop drying system is not complicated; it can simply be a glazed box with a dark-colored interior to collect solar energy, which heats the air inside the box. The heated air is then moved through the crop material either by natural convection or with a fan. In hot and arid climates the solar collector may not even be necessary for the solar dryer. The southern side of the enclosure itself can be glazed to allow sunlight to dry the material. The size of the collector and

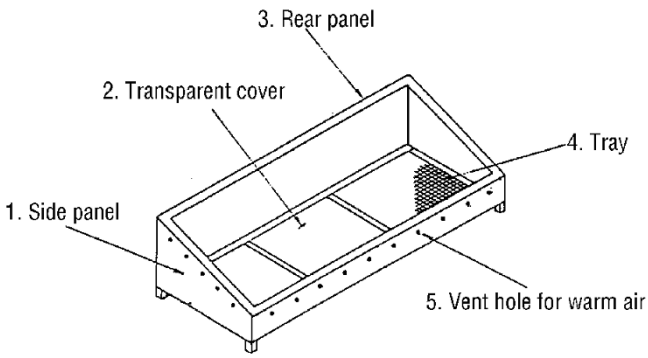

Figure 2. Box dryer (Patranon, 1984).

rate of airflow depends on the amount of material being dried, the moisture content of the material, the humidity in the air, and the average amount of solar radiation available during the drying season.

There is a relatively small number of large solar crop dryers in the United States. This is because the cost of the solar collector can be high, and drying rates are not as controllable as they are with natural gas- or propane-powered dryers. The multipurpose use of solar collectors at other times of the year, such as for heating farm buildings, may make a solar dryer more cost-effective. It is possible to make small, very low-cost dryers out of simple materials. These systems can be useful for drying vegetables and fruit for home use.

Natural convection solar drying has advantages over forced convection solar drying because it requires lower investment, but it is difficult to control the drying temperature and the drying rate in natural convection. Due to low cost and simple operation and maintenance, natural convection seems to be more popular. The box type solar dryer with the natural convection principle is shown in Figure 2 (Patranon, 1984).

Solar-assisted curing of tobacco leaves was developed by Boonlong (1984). The experimental prototype system consisted of a 3.6 m × 3.6 m × 4.8 m scaled-down (1:4 scale) tobacco curing barn with 1 metric ton fresh leaves loading capacity (Fig. 3), an array of 38.5-m^2 flat-plate solar air heaters, and a 6-m^3 rock-bed unit. Forced convection was induced through the system by using air blowers of two different capacities: one 1.5 kW and other 0.75 kW (Boonlong, 1984). LPG was used directly as an auxiliary heating fuel. It was found that an average fuel saving of 28 per cent was possible (Boonlong, 1984). The average overall airing thermal efficiency was found to be 40.5 per cent. The overall usefulness of a rock-bed thermal storage unit was still inconclusive (Boonlong, 1984).

A mixed-mode natural convection solar dryer for fruits and vegetables is shown in Figure 4 reported by Patranon (1984). Similarly, a low-cost mixed-mode natural convection solar dryer for paddy-drying is shown in Figure 5 reported by Patranon (1984).

Solar drying of some crops such as paddy, multiple crops and fruit has proved technically feasible. However, there is limited acceptance of solar dryers amongst farmers in Thailand (Soponronnarit, 1995). The major constraint may come from a long payback period and high initial investment. The design factors for making suitable solar dryers were identified as follows (Anon, 1986; Soponronnarit, 1995).

1. Large-scale dryers capable of handling tonnes of material are more promising than small-scale ones rated in the order of kilograms.
2. The dryer should be designed to yield the maximum utilization factor of the capital investment, i.e., it should be multi-product and multi-use.
3. In general, an auxiliary heat source should be provided to ensure reliability, to handle peak loads and also to provide continuous drying during periods of no sunshine. Rock-bed heat storage is not considered viable.
4. Forced-convection indirect dryers are preferred because they offer better control, more uniform drying and because of their high heat collection efficiency. However, the use of parasitic power should be kept to a minimum.
5. Retrofit systems should be examined.

The importance of solar drying application in the agricultural sector is as follows:

- After air and water, it is well known that food is a basic need for a human being. Food holds a key position in the development of a country. In order to avoid food losses (generally about 25% depending on the crop) between harvesting and consumption, there is need for drying of food for storage for long-time use.
- High moisture content is one of the reasons for crop spoilage during the course of storage during the harvesting period. High-moisture crops are prone to fungus infection, attacks by insects and pests, and the increased respiration of agricultural produce. This problem was solved by developing many drying techniques as discussed above.

Solar drying has the following advantages:

(i) facilitates early harvest;
(ii) permits planning the harvest season;
(iii) helps in long-term storage;
(iv) helps farmers to fetch better returns;
(v) helps farmers to sell a better quality product;
(vi) reduces the requirement of storage space;
(vii) helps in handling, transport and distribution of crops; and
(viii) permits maintaining viability of seeds.

Open sun drying introduces insects/dust into the dried products and hence reduces the quality of products to be sold in the market. Hence, there is a need for the solar dryer, which helps in reducing the moisture content of a product to a level below which deterioration does not take place and the product can be stored for a definite period without involving any insects/dust during the drying activity. The final moisture content (%, weight basis) and name of some crops are given below in Table III.

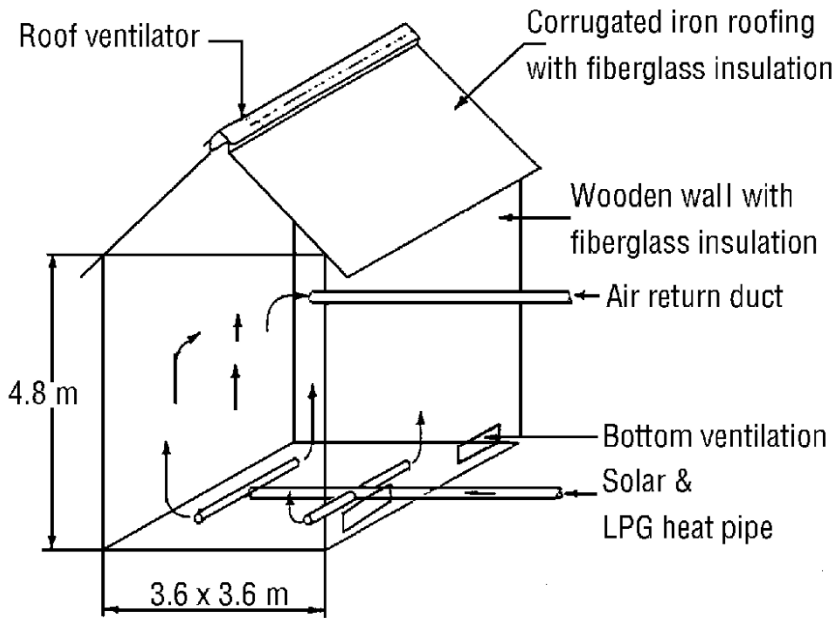

Figure 3. The modified prototype tobacco curing barn (Boonlong, 1984).

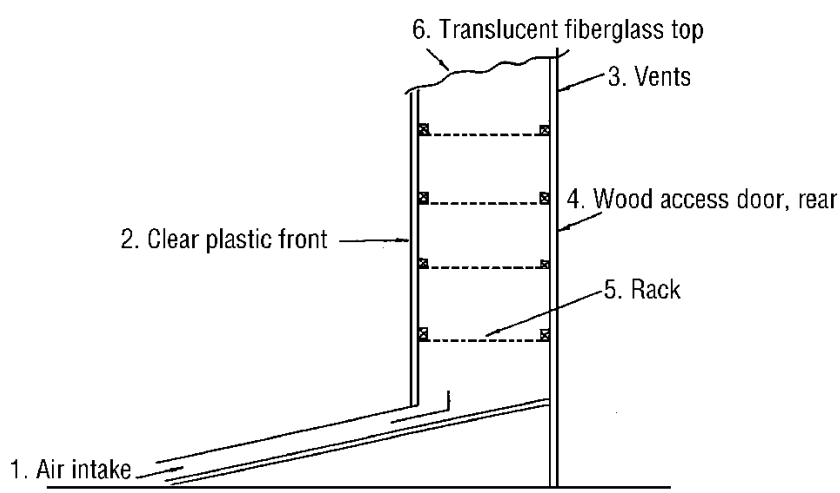

Figure 4. Section view of the fruit and vegetable dryer (Patranon, 1984).

Table III. Final moisture content for various crops after drying.

Final moisture content (%, weight basis)		Name of the crop
(i)	≅5	Vegetables (Green peas, Cauliflower, Carrots, Green beans, Onions, Garlic, Cabbage, Sweet potato, Gauvas, Brinjal, etc.)
(ii)	10–15	Paddy, Maize, Wheat, Rice, Pulses, Oil seed, etc.
(iii)	⩽25	Fruits (Grapes, Apples, Apricot, Grapes, Okra, etc.)

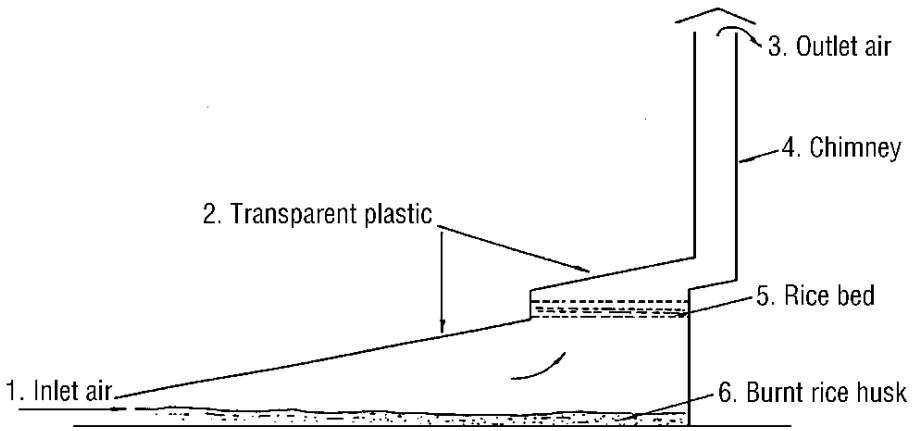

Figure 5. Mixed-mode natural convection rice dryer (Patranon, 1984).

3.1.2. Solar space and water heating

Solar space-heating systems can be used in livestock, dairy and other agriculture operations that have significant space and water heating requirements. Livestock and dairy operations often have substantial air and water heating requirements. Modern pig and poultry farms raise animals in enclosed buildings, where it is necessary to carefully control temperature and air quality to maximize the health and growth of the animals. These facilities need to replace the indoor air regularly to remove moisture, toxic gases, odors and dust. Heating this air, when necessary, requires large amounts of energy. With proper planning and design for harsh winter conditions, solar air/space heaters such as the Trombe wall (Chel et al., 2008) can be incorporated into farm buildings to preheat incoming fresh air. These systems can also induce or increase natural ventilation levels during summer months.

Solar water heating systems can provide low to medium temperature hot water for pen cleaning. Commercial dairy farms use large amounts of energy to heat water to clean equipment, as well as to warm and stimulate cows' udders. Heating water and cooling milk can account for up to 40% of the energy used on a dairy farm. Solar water heating systems may be used to supply all or part of these hot water requirements. Water heating can account for as much as 25% of a typical family's energy costs and up to 40% of the energy used in a typical dairy operation. A properly sized solar water heating system could cut those costs in half. Hot water is also needed for pen and equipment cleaning and a host of other agricultural uses.

Solar water heating systems use the sun to heat either water or a heat-transfer fluid, such as a water-glycol antifreeze mixture, in collectors most commonly mounted on a roof. The heated water is then stored in a tank similar to a conventional gas or electric water tank. When water is drawn from the water heater, it is replaced with the solar-heated water from that tank. Some systems use an electric pump to circulate the fluid through the collectors. Solar water heaters can operate in any climate. Performance varies depending, in part, on how much solar energy is available at the site, but also on the temperature of incoming water. The colder the water, the more efficiently the system operates. In almost all climates, there is need for a conventional backup system. In fact, many building codes require a conventional water heater as the backup. The schematic solar water heating system is shown in Figure 6a. A typical solar hot water system for agriculture processing is shown in Figure 6b.

In its simplest form, a solar water heater consists of an absorber, a storage tank, insulation, piping and a transparent cover. Solar energy heats the absorber surface and a heat-transfer fluid (indirect) or water (direct) flowing through tubes attached to the absorber. If a heat-transfer fluid is used, there is a heat exchanger that then heats the water as shown in Figure 6b. The heated water is transferred to the insulated storage tank either with a pump or without a pump through natural convection. A transparent cover (glass or plastic) is placed above the absorber to reduce heat losses due to radiation and also on account of wind flowing over the absorber. The bottom and sides of the absorber are covered with insulation to reduce both types of heat losses. The absorber, cover and insulation are placed within a plastic or metal container.

The solar water heating system with a single solar flat plate collector is designed for heating a minimum of 100 L of water up to a minimum of 60 °C under winter conditions. Worldwide, solar water heaters annually deliver approximately 600 kW h per kW installed. The most common types of solar water heaters are glazed flat plate collectors (34%) and evacuated tube collectors (44%), generally used for domestic hot water; and unglazed plastic collectors (21%), used mainly to heat swimming pools. As of 2007, the total installed capacity of solar hot water systems is approximately 128 GW and growth is 15–20% per year. China is the world leader in the deployment of solar hot water, with 70 GW installed capacity as of 2006 and a long-term goal of 210 GW by 2020.

The size of a solar water heater can be generally considered as 10 to 18 square feet of collector area per person depending on the climatic location and around 1.5 to 2.0 gallons of storage per square foot of collector area. A family of four members thus requires 40 to 72 square feet of collector area and

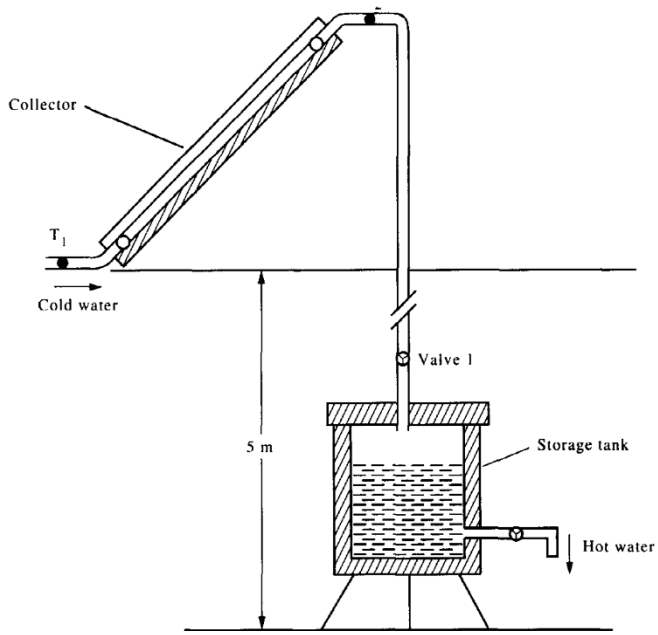

Figure 6a. Schematic of solar water heater (Venkatesh, 1994).

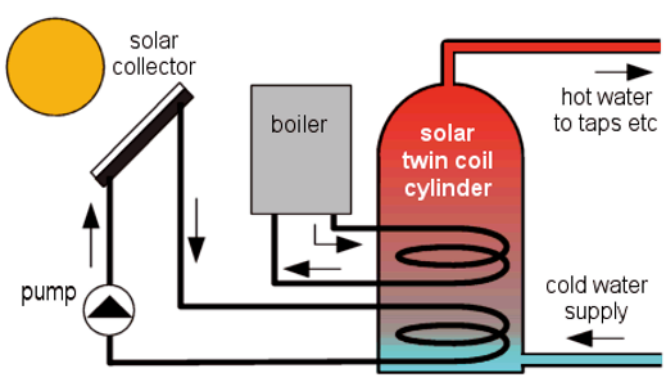

Figure 6b. Typical solar hot water system for agriculture processing installed on farms.

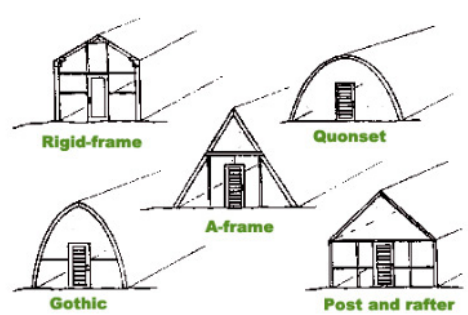

Figure 7. Schematic view of different shapes of greenhouses (Kessler, 2006).

60 to 140 gallons of hot water storage. Collector dimensions are roughly 4 feet × 8 feet (or 32 square feet); therefore, a system of solar hot water for a family of four members generally will have 1 to 3 collectors depending upon the climatic location of the solar system, as reported by North Carolina Solar Center (2002).

3.1.3. Greenhouse heating

Another agricultural application of solar energy is greenhouse heating. Commercial greenhouses typically rely on the sun to supply their lighting needs, but are not designed to use the sun for heating. They rely on gas or oil heaters to maintain the temperatures necessary to grow plants in the colder months. Solar greenhouses, however, are designed to utilize solar energy for both heating and lighting. A solar greenhouse has thermal mass to collect and store solar heat energy, and insulation to retain this heat for use during the night and on cloudy days. In the northern hemisphere, a solar greenhouse is oriented to maximize southern glazing exposure. Its northern side has little or no glazing, and is well insulated. To reduce heat loss, the glazing itself is also more efficient than single-pane glass, and various products are available ranging from double pane to "cellular" glazing. A solar greenhouse reduces the need for fossil fuels for heating. A gas or oil heater may serve as a back-up heater, or to increase carbon dioxide levels to induce higher plant growth. The schematic views of different shapes of greenhouses are shown in Figure 7.

Solar greenhouses are designed to collect solar energy during sunny days and also to store heat for use at night or during periods when it is cloudy. They can either stand alone or be attached to houses or barns. A solar greenhouse may be an underground pit, a shed-type structure, or a Quonset hut.

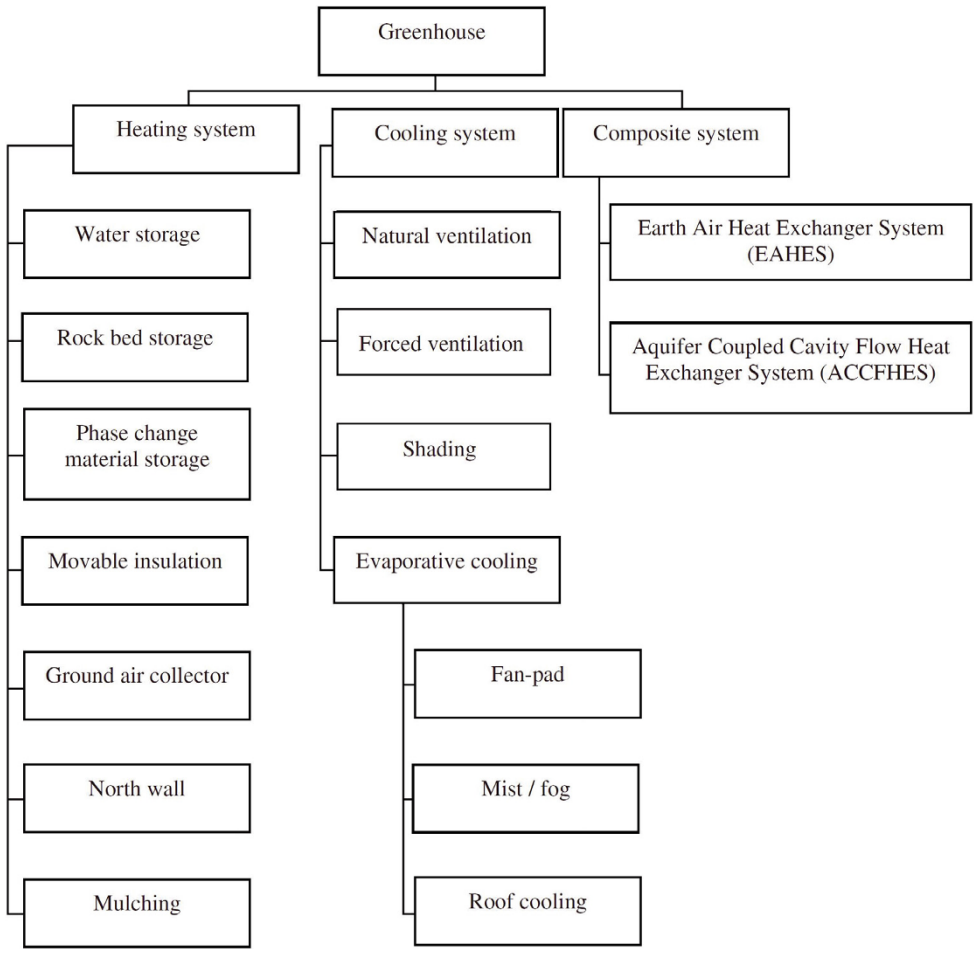

Figure 8. Classification of various thermal control systems for agricultural greenhouses.

Large-scale producers use free-standing solar greenhouses, while attached structures are primarily used by home-scale growers.

Solar greenhouses differ from conventional greenhouses in the following five ways. Solar greenhouses:

- have glazing oriented to receive maximum solar heat during the winter;
- use heat-storing materials to retain solar heat;
- have large amounts of insulation where there is little or no direct sunlight;
- use glazing material and glazing installation methods that minimize heat loss;
- rely primarily on natural ventilation for summer cooling.

Passive solar greenhouses are often good choices for small growers, because they are a cost-efficient way for farmers to extend the growing season. In colder climates or in areas with long periods of cloudy weather, solar heating may need to be supplemented with a gas or electric heating system to protect plants against extreme cold. Active solar greenhouses use supplemental energy to move solar-heated air or water from storage or collection areas to other regions of the greenhouse. Use of photovoltaic heating systems for greenhouses is generally not cost-effective unless producing high-value crops.

Use of solar agricultural greenhouses in agricultural production has increased manifold over the last two decades. The primary objective of a greenhouse is to produce higher yield outside the cultivation season, which is possible by maintaining the optimum temperature at every stage of the crop. An appropriate heating (or cooling) system can be coupled with the greenhouse for this purpose. This, as a result, has a significant impact on the cultivation time, quality and quantity of the products. Continuous research in this area and several successful demonstrations have resulted in rapid advancements and commercialization of these systems with satisfactory results. Based on the working principles, these greenhouses have been classified into active and passive greenhouses (Santamouris et al., 1994). Although several systems for greenhouse heating have been proposed by many researchers, as will be evident in this survey, they have not been fully evaluated yet. Based upon the characteristics these systems are classified as heating systems, cooling systems and composite systems as shown in Figure 8 (Sethi and Sharma, 2009).

A greenhouse heating system is used to increase the thermal energy storage inside the greenhouse during the day or

to transfer excess heat from inside the greenhouse to the heat storage area. This heat is recovered at night to satisfy the heating needs of the greenhouse. The important existing greenhouse heating systems are: water storage, rock-bed storage and phase-change material storage. Apart from these, movable insulation (thermal screens/curtains), a ground air collector (GAC) and north wall storage is also used for raising the greenhouse air temperature. A greenhouse cooling system is used to lower the thermal energy from inside the greenhouse by various techniques such as ventilation (natural and forced), shading/reflection, evaporative cooling (fan-pad system, mist/fog and roof cooling). In a composite system, the same system is used for heating the greenhouse in winter and cooling in summer. Currently, the earth-to-air-heat exchanger system (EAHES) is the most successfully used composite system for agricultural greenhouses. EAHES utilizes the underground constant temperature of earth mass to transfer/dissipate heat to/from the greenhouse. Recently, the aquifer coupled cavity flow heat exchanger system (ACCFHES) has also been developed. It utilizes the constant temperature of deep aquifer water at the ground surface through an irrigation tube well for heating as well as cooling of the greenhouse. A detailed survey of all the existing cooling technologies and composite systems (dealing with the cooling aspect only) for worldwide agricultural greenhouse applications has already been conducted (Sethi and Sharma, 2007). In a very important study, the night energy balance of an air-heated low-cost plastic greenhouse, in the mild winter climatic conditions of Almeria in southeastern Spain was conducted (Baille et al., 2006). It was concluded that to improve the energy efficiency of a greenhouse in winter, the air tightness of the greenhouse must be improved, radiative losses must be reduced by means of using thermal screens or IR-opaque plastic covering materials and the soil efficiency be increased in storing solar energy and releasing it during the night. Apart from these factors overall performance of a greenhouse coupled with any heating system is influenced by several interrelated parameters such as size of the greenhouse, type of cover material used, heat storage method, quantity of material used, type of cultivation, desired day and night temperature of the inside air, location of the greenhouse, and outside ambient conditions. In total, more than 160 representative applications exclusively for greenhouse applications have been surveyed by Sethi and Sharma (2009).

A greenhouse for crop production is a highly sophisticated structure, which aims at providing ideal conditions for satisfactory plant growth and production throughout the year. For satisfactory plant growth, the growth factors, namely light intensity, temperature, humidity and air composition are maintained at optimum levels inside the greenhouse for higher productivity. The maintained chamber inside the greenhouse is also referred to as a controlled environment greenhouse.

The climatic requirements for plant growth can therefore be summarized as follows; Sirjacobs (1989) and Verlodt (1990):

(i) Plants grown under protected cultivation are mainly adapted to average temperatures ranging from 17 to 27 °C. Taking into account the warming-up effect of solar radiation in the greenhouse, the above temperature range can be possible without any heating arrangement in it when the outside ambient temperature prevails in the range from 12 to 22 °C.
(ii) If the mean daily outside temperature is below 12 °C, the greenhouse is to be heated, particularly at night. When the mean daily temperature is above 22 °C, especially during summer, artificial cooling is necessary or cultivation in the greenhouse is to be stopped. Natural ventilation is sufficient when ambient mean temperatures range from 12 to 22 °C.
(iii) The absolute maximum temperature for plants should not be higher than 35–40 °C.
(iv) The minimum threshold for soil temperature is 15 °C.
(v) Verlodt (1990) suggests a threshold of the average night temperature as 15–18.5 °C for heat-requiring plants such as tomato, pepper, cucumber, melon and beans.
(vi) The safe ranges of relative humidity are from 70–80%.

Recent data concerning the total greenhouse area in different countries is shown in Table IV (Jenson and Malter, 1995).

3.1.4. Remote electricity supply through solar photovoltaics/wind

Photovoltaics has been derived from the combination of two words; "Photo" means light and "Voltaic" means electricity. It is a technology that converts light directly into electricity. Photovoltaic material, most commonly utilizing highly-purified silicon, converts sunlight directly into electricity. When sunlight strikes the material, electrons are dislodged, creating an electrical current which can be captured and harnessed. The photovoltaic materials can be several individual solar cells or a single thin layer, which make up a larger solar module. The output of solar modules will vary according to their conversion efficiency and the amount of sunlight received.

Solar electric or photovoltaic (PV) systems convert sunlight directly into electricity. They can power an electrical appliance directly, or store solar energy in a battery. PV systems may be much cheaper than installing power lines and step-down transformers in applications such as electrical fencing, lighting, and water pumping. Table V shows the different size and cost required for installing a PV power system for different values of an optimum number of sunshine hours on the optimally tilted surface at an angle equal to latitude of that place for the fixed load of 3650 W h/day as reported by Chel et al. (2009a, b).

The PV system can be connected to feed excess electricity to the grid as shown in Figure 9a. The pictorial view of a typical 200 kW_P solar PV power plant at the Om Shanti Retreat Center near Delhi is shown in Figure 9b.

A typical grid-connected wind power system is shown in Figure 9c. A small wind energy system can provide one with a practical and economical source of electricity if:

- the location has a good wind resource with average annual wind speed of at least 4.5 m/s (or 10 mph);
- the farm, home or business is located on at least one acre of land in a rural area;
- local zoning codes or covenants allow wind turbines;

Table IV. Greenhouse area in different countries (Jensen and Malter, 1995).

Country	Area (ha)	Country	Area (ha)	Country	Area (ha)
Algeria	5000	France	5800	Poland	1500
Australia	600	Greece	4240	Portugal	2500
Belgium	2400	Hungary	5500	Romania	3500
Bulgaria	1350	India	500	Spain	25 000
Canada	400	Israel	2200	South Korea	21 000
Chile	1600	Italy	18 500	Turkey	9800
China	48 000	Japan	42 000	United Arab	55
Columbia	2600	Jordan	450	USA	4250
Egypt	1000	Morocco	3000		
England	3500	Netherlands	9600		

Table V. Size and cost of PV power system based on full sunshine hours in the world (Chel et al., 2009a).

	Number of sunshine hours (N) distributed in the world					
Load = 3650 W h/day	$N = 1$	$N = 2$	$N = 3$	$N = 4$	$N = 5$	$N = 6$
Array size (W)	5475	2738	1825	1369	1095	913
Battery bank size (Ah)	2281	2281	2281	2281	2281	2281
Cost of array ($)	27 375.0	13 687.5	9125.0	6843.8	5475.0	4562.0
Cost of battery bank ($)	2281.3	2281.3	2281.3	2281.3	2281.3	2281.3
Cost of inverter ($)	5475.0	2737.5	1825.0	1368.8	1095.0	912.5
Subtotal ($)	35 131.3	18 706.3	13 231.3	10 493.8	8851.3	7756.3
Cost of BOS ($)	7026.3	3741.3	2646.3	2098.8	1770.3	1151.3
Total PV sysytem cost ($)	42 157.5	22 447.5	15 877.5	12 592.5	10 621.5	9307.5
ALCC-1 ($/year) ($i = 4\%$)	2067.1	1220.2	937.9	796.7	712.0	655.5
ALCC-2 ($/year) ($i = 8\%$)	3735.1	2129.3	1594.1	1326.4	1165.9	1058.8
ALCC-3 ($/year) ($i = 12\%$)	5436.6	3057.8	2264.9	1868.4	1630.5	1471.9
C-1 ($/kWh) (for $i = 4\%$)	1.6	0.9	0.7	0.6	0.5	0.5
C-2 ($/kWh) (for $i = 8\%$)	2.8	1.6	1.2	1.0	0.9	0.8
C-3 ($/kWh) (for $i = 12\%$)	4.1	2.3	1.7	1.4	1.2	1.1

B.O.S.: balance of system; ALCC: annualized life cycle cost.

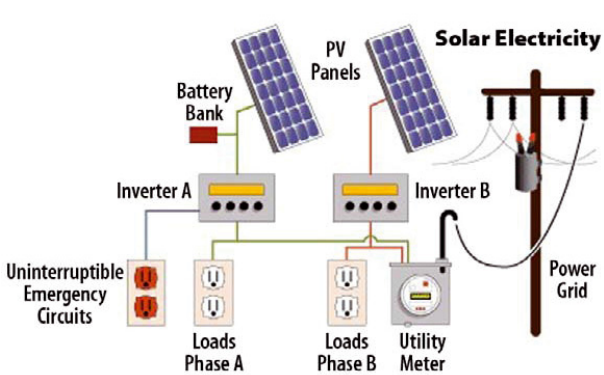

Figure 9a. Grid-connected PV electricity.

Figure 9b. A 200 kW_P solar PV power at the Om Shanti Retreat Center near Delhi (India) (Pilz, 2009).

- average electricity bills are $150 per month or more;
- the site is in a remote location that does not have easy access to utility lines;

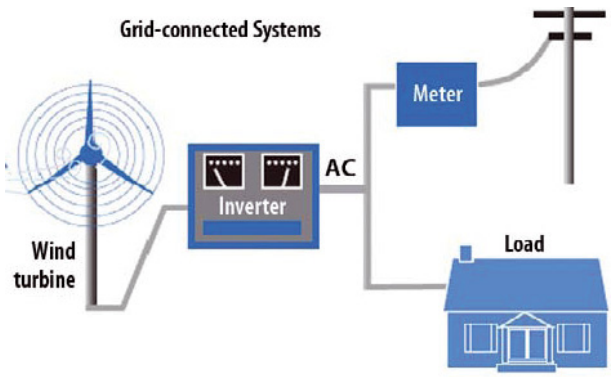

Figure 9c. A grid-connected wind turbine to reduce consumption of grid electricity. A.C.: alternating curent.

Table VI. Typical sizes of wind turbines.

Size (kW)	Height (ft.)	Diameter (ft.)
1	30–100	4–8
10	60–120	23–25
100	80–120	56–60

- the investor is comfortable with long-term investments;
- the expensive grid electricity costs about 10 to 15 cents per kilowatt-hour.

In grid-connected systems, the only additional equipment required is a power conditioning unit (inverter) that makes the turbine output electrically compatible with the utility grid. Usually, batteries are not needed. Small wind energy systems can be connected to the electricity distribution system and are called grid-connected systems. A grid-connected wind turbine can reduce one's consumption of utility-supplied electricity for lighting, appliances and electric heat. If the turbine cannot deliver the amount of energy one needs, the utility makes up the difference. When the wind system produces more electricity than the household requires, the excess is sent or sold to the utility. Grid-connected systems can be practical if there are good incentives for the sale of excess electricity or for the purchase of wind turbines. The typical sizes of wind turbines are given in Table VI.

3.1.5. Solar water pumping in agriculture

Photovoltaic (PV) water pumping systems may be the most cost-effective water pumping option in locations where there is no existing power line. When properly sized and installed, PV water pumps are very reliable and require little maintenance. The size and cost of a PV water pumping system depends on the local solar resource, the pumping depth, water demand, and system purchase and installation costs. Although today's prices for PV panels make most crop irrigation systems too expensive, PV systems are very cost-effective for remote livestock water supply, pond aeration, and small irrigation systems. The PV integrated windmill for water pumping is shown in Figure 10a while a PV integrated water pumping application is shown in Figure 10b.

If the water is required at times when the sun is not shining, there are two means of storing the energy:

- chemical storage (battery) where the PV module keeps the battery bank charged so it can power the pump on demand. Battery storage is a good choice when space is an issue or if the system needs constant pressure, and batteries can last for three to eight years;
- mechanical storage (elevated reservoir) where the PV module powers the pump during sunlight hours to ensure that a storage reservoir is full for later demand. Systems that use this type of storage are called Solar Direct systems, and an elevated reservoir keeps the system simple and eliminates the need for battery maintenance.

There are two commonly used configurations for PV water pumping systems which are shown schematically using Figures 11a, b. These systems require two non-interchangeable solar controllers. In the case of battery-connected solar water pumping systems (with batteries), the solar controller is used to regulate the flow of electricity from the PV module to either the pump or to the batteries. In battery-powered systems, the controller regulates the amount of current flowing into the battery from the PV module to maximize its available power. It also prevents the batteries from damage by over-charging, as reported by Chel and Tiwari (2010). In solar direct water pumping systems (no batteries), the controller optimizes the power from the module to the pump to produce as much water flow as possible. Pressure switches, expansion tanks, float valves, foot valves and inlet filters are important components of the PV water pumping system to protect the system to ensure trouble-free operation.

Today, many water pumps on the market are specifically designed to be powered by a solar photovoltaic (PV) panel, but any pump with a direct current motor can operate with PV (Fig. 11c). Submersible, piston, rotary vane, centrifugal and diaphragm are some of the different types of pumps available, which can overcome significant vertical and horizontal distances that can reach hundreds of meters. Often, direct current pumps can move the same quantity of water as a traditional pump, but operate with half the power, which means the cost to power a solar pump can be half of the cost to power an alternating current unit. The improved motor efficiency of the direct current pump has the most to do with this.

An advantage of using direct solar radiation as a power source for irrigation is that it is available at the site of application without the employment of a distribution system (Kenna et al., 1985; Whiffen et al., 1992). Plant water demand and the quantity of water pumped by a photovoltaic-powered water pumping system are both directly correlated to daily solar insolation.

Photovoltaic power for irrigation is cost-competitive with traditional energy sources for small, remote applications, if the total system design and utilization timing is carefully considered and organized to use the solar energy as efficiently as possible. In the future, when the prices of fossil fuels rise and the economic advantages of mass production reduce the

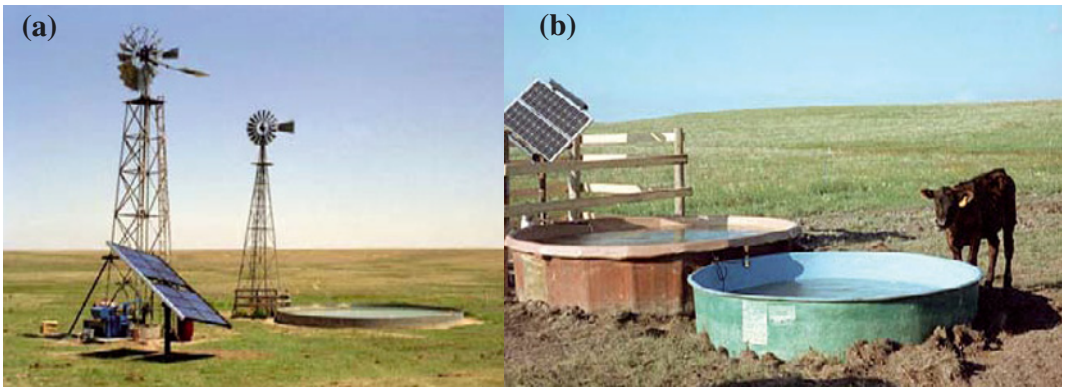

Figure 10. Water pumping: (a) PV windmill integrated water pump and (b) PV integrated water pumping application.

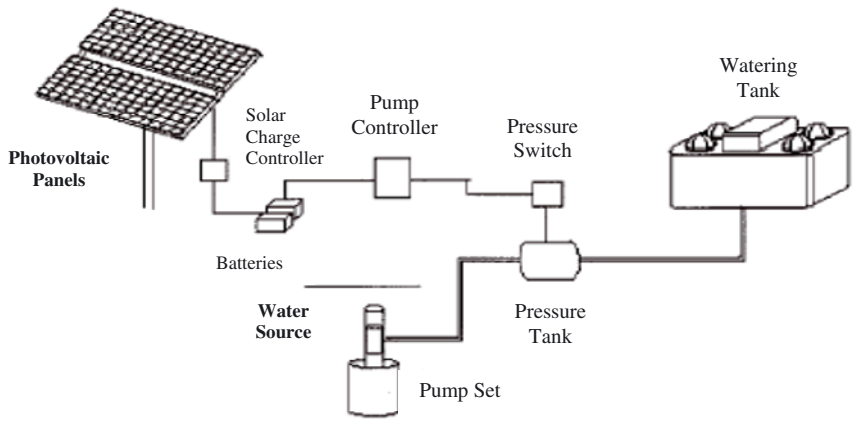

Figure 11a. Battery-coupled solar water pumping system (Eker, 2005).

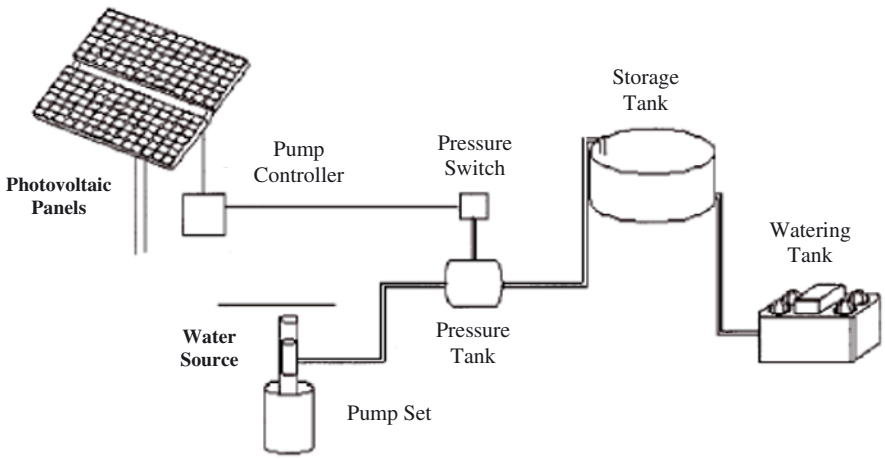

Figure 11b. Direct coupled solar pumping system (Eker, 2005).

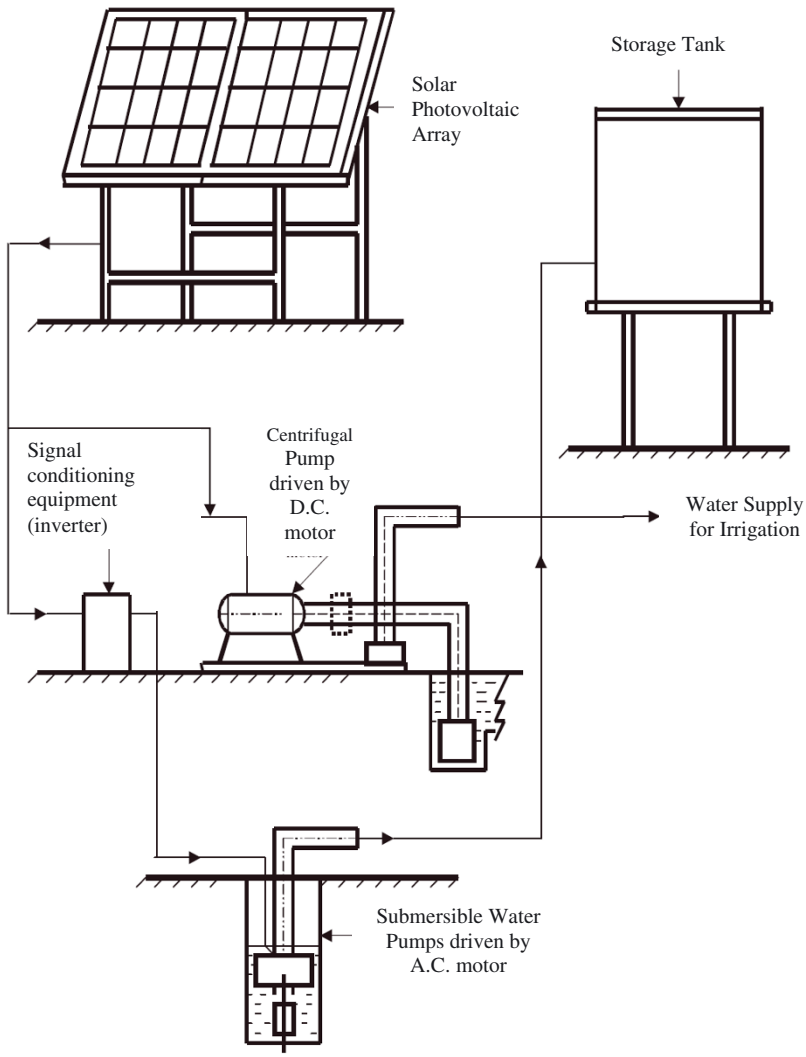

Figure 11c. Schematic diagram of solar PV water pump (Purohit and Michaelowa, 2008b). D.C.: direct current; A.C.: alternating current.

peak watt cost of the photovoltaic cell, photovoltaic power will become more cost-competitive and more common (Helikson et al., 1991). The cost of a solar PV water pump reported by Meah et al. (2008) is given in Table VIIa. It shows PV system components' cost in terms of US$ and Bangladesh Taka. The cost of a conventional diesel water pump is reported by Meah et al. (2008) and is given in Table VIIb. The cost comparison was made between the solar PV water pump (SPWP) and diesel generator-operated water pump in Table VIIc.

Table VIIa. Cost estimation for solar PV water pump (Meah et al., 2008).

Decription	Cost (US$)	
	USA	bangladesh
PV module	4500	4500
Support structure	200	50
Controller	200	200
Transportaion (per year)*	75	15
Motor/pump	750	750
Installation	1000	200
O&M (per year)*	50	10
Accessories	200	100

* Variable cost of solar PV water pump (SPVWP), US $1.00 = 69.49 Bangladesh Taka. O&M: operation and maintenance.

3.1.6. Generate energy on the farm: renewable fuels for transportation

Transportation accounts for 65 percent of US oil consumption and is the predominant source of air pollution. However, there are safe, environmentally-friendly alternative fuels that can substitute gasoline and diesel or be blended with them to reduce toxic air emissions. Using renewable fuels also reduces greenhouse gas buildup, dependence on imported oil,

Table VIIb. Cost estimation for conventional diesel water pump (Meah et al., 2008).

Decription	Cost (US$)	
	USA	Bangladesh
Generator	1000	1000
Fuel (per year)*	500	500
Transportaion (per year)*	500	100
Motor/pump	750	750
Installation	500	100
O&M (per year)*	200	100
Accessories	200	100

* Variable cost of conventional diesel water pump, US $1.00 = 69.49 Bangladesh Taka. O&M: operation and maintenance.

Table VIIc. Capital cost over 25 years: SPVWP and diesel generator (Meah et al., 2008).

System	Cost (US$)	
	USA	bangladesh
SPWP	8750	7700
Diesel generator	7950	7450

SPVWP: solar PV water pump.

Figure 12a. Fuel from the farm ready at the pump – *DOE-NREL.*

and trade deficits, while supporting local agriculture and rural economies. Renewable fuels are not petroleum-based, hence they are cleaner burning. Renewable fuels include:

(a) Biodiesel – a low-polluting diesel alternative fuel made from vegetable oils, animal fats, and even recycled cooking greases.
(b) Ethanol – an alcohol-based fuel derived from crops, usually corn, barley and wheat. Ethanol can be blended with gasoline in varying concentrations. E85, for example, is a blend of 85 percent ethanol and 15 percent gasoline, as shown in Figure 12a reported by DOE-NREL. Figure 12b shows Stateline Farm in Shaftsbury gearing up to produce 100 000 gallons per year of biodiesel at its on-farm facility, as reported by SARE.

Agricultural technology is changing rapidly. Farm machinery, farm buildings and production facilities are constantly being improved through energy efficiency program guidelines. One should consider these factors while purchasing and installing a solar system in farms as discussed in this section. Payback periods may be shortened by the multiple possible use of a solar system, such as for space heating and crop drying.

Figure 12b. Stateline Farm in Shaftsbury is gearing up to produce 100,000 gallons per year of biodiesel at its on-farm facility. *Photo by Vern Grubinger* (www.sare.org).

3.1.7. Generate energy on the farm from cattle dung and human waste: an approach of KVIC Biogas Power Generation in Masudpur, Delhi (India)

Biogas plants are well-known technology for methane gas production of clean power generation from waste products, e.g. cattle dung and human waste. Biogas plants with 85 m^3 capacity of each of the four floating gas domes were commissioned in the year 1982 by Khadi village and industries commission (KVIC) in Masudpur village in Delhi. The methane generation from an 85-m^3-capacity biogas plant was determined as 271.12 kg/year as reported by Khoiyangbam et al. (2004). One of the floating gas domes is directly connected to the Masudpur village community-based toilet, as shown in Figure 13, and the other three gas domes are operating based on cattle dung waste from the nearby Masudpur village dairy

Figure 13. Biogas plant based on community toilet (i.e. human waste) and cow dung for cooking gas and electricity generation.

farm where there are about one thousand cattle for milk production. The diesel engine generator is operated with 80% biogas and 20% diesel to produce 7.5 kV A with a Kirloskar alternating current generator. This electric supply is fed to a crusher which crushes the dried manure from the biogas plants to produce a powder form of manure for sale in the market. The manure produced from the biogas plants is sold at Rs.60 per 5 kg bag.

4. CLEAN ENERGY FARMING

Across the world, as energy prices climb, farmers and ranchers are turning more and more to clean energy practices. From energy-saving light bulbs to solar panels to fuel grown and processed on the farm, farmers are making their operations more profitable, efficient and cleaner. In the process, they are helping the nation. Generating renewable energy and using fossil fuels more efficiently reduces dependence on foreign oil, providing greater local and national energy security. It also curbs global warming pollution and offers new economic opportunities for communities. In short, clean energy practices are quickly becoming core to the operations of farmers and ranchers across the world, and especially in America (SARE, 2006).

Clean energy farming explores this emerging trend in agriculture and explains to farmers the following key points:

- improve energy efficiency while saving money;
- implement farming practices that both save energy and protect natural resources;
- produce and use renewable energy.

For example, Busto's solar-heated greenhouse can eliminate most fossil fuel costs. Energy audits, such as those recently performed on 25 farms on Maryland's Eastern Shore, revealed potential total savings of almost $115 000 annually for the participating farmers (SARE, 2006).

While energy efficiency measures are generally the fastest and cheapest way to reduce energy-related costs, many farmers are now turning to their land and operations to generate renewable energy.

Recently, much national attention has focused on corn ethanol. Yet other renewable types of energy, such as solar, wind and fuels from animal waste or other energy crops, also offer many opportunities to reduce fuel costs and increase energy self-sufficiency on the farm. As an added bonus, these energy sources can generate extra income through sales of surplus and offer a more sustainable alternative to energy-intensive corn (SARE, 2006).

As with all agricultural practices, renewable energy production will vary widely by region. A wide variety of oilseed crops for biodiesel show excellent promise in the Pacific Northwest and Northeastern states, while switch grass, a high-yielding and relatively easy-to grow crop, and potential fuel feedstock, appears very well suited to the South and Midwest. As the clean energy industry grows, farmers will be able to tap into their local resources – soil, wind and water – to find the best energy sources for their area. It is safe to say that it is no longer a question of if or when, but how this country will transition to cleaner energy sources. Clean Energy Farming highlights research and examples of farmers and ranchers who are successfully transitioning toward energy systems that are profitable, demonstrate good stewardship of America's land and water, and benefit their operations and communities. The steps towards clean energy farming are discussed below (SARE, 2006).

Farmers and ranchers have a key role to play in creating an energy future for their nation that is profitable, a force for excellent land and water stewardship, and provides communities with new economic opportunities. The clean energy path begins with the following key points:

- Start simply and carefully: conduct an energy audit and consider implementing efficiency measures such as energy-efficient light bulbs, machinery upgrades and green building design.
- Determine your fuel use and demands and look for ways to cut back.
- Consider farming practices that conserve and build soil, save water and curb the release of greenhouse gases.

- Assess your natural energy resources: do you have wind? Sun? Suitable land for biomass? Adequate manure reserves for biogas production?
- Take stock of your financial resources: can you comfortably experiment?
- Talk to others about their clean energy practices.
- Seek expert guidance in getting started with clean energy farming (refer to Appendix).

5. CLEAN DEVELOPMENT MECHANISM (CDM) IN THE AGRICULTURE SECTOR

The world community faces two major and interrelated problems in a sustainability context. One is global climate change. The other is economic, ecological and social problems suffered by developing and less developed countries (non-Annex I countries). The Clean Development Mechanism (CDM) may contribute to the mitigation of both problems since, according to article 12 of the Kyoto Protocol, it should make compatible cost-efficient abatement of greenhouse gas emissions with the improvement in the sustainable development potential of poorer countries by promoting the transfer of both financial and technological resources from developed to less developed countries (Rio, 2007). A wide range of eligible CDM projects can lead to creditable reductions of greenhouse gas emissions. The renewable energy clean development mechanism (RE-CDM) projects in the agriculture sector considered are particularly those of a small size or those which are not profitable at the margin, simultaneously contributing to the sustainability of the host country, such as solar (thermal and PV) and wind electricity. CDM projects in general and RE-CDM projects in particular have a large potential to contribute to the three dimensions of sustainability in non-Annex I countries.

5.1. Economic sustainability

CDM projects allow host countries to receive a transfer of financial, technological and human resources increasing development, employment and investment opportunities. Benefits from so-called decentralized generation in general and renewable electricity in particular include higher energy security and availability and a more diversified energy mix, reducing fossil fuel dependency. Small decentralized projects have a larger potential to contribute to local sustainability (poverty alleviation and employment generation) than larger projects (Rio, 2007).

5.2. Social sustainability

Human capital formation, job creation and building of local capacity may be provided to host countries. In addition, there might be significant equity advantages (income distribution) due to the participation of unskilled workers in the project and the effects of the distribution of the resulting environmental benefits in different income groups (Rio, 2007).

5.3. Environmental sustainability

Renewable energy-CDM projects may reduce local environmental impacts. Rio (2007) explores the different barriers affecting the implementation of RE-CDM projects and proposes and analyzes several policies and measures that could be implemented to encourage their deployment by tackling those obstacles.

The transfer of greenhouse gas mitigation technologies to developing countries is the subject of an extensive general literature (for example, Yang, 1999; IPCC, 2000; Yang and Nordhaus, 2006). Numerous case studies of successful technology transfers have also been conducted in order to assess the drivers for and barriers to technology adoption (for instance, IEA, 2001; Kathuria, 2002; Ockwell et al., 2008). The literature on technology transfers through CDM is more recent but it is growing fast. A good review can be found in Schneider et al. (2008), with a detailed analysis of the CDM contribution to the alleviation of various barriers to technology transfer. Several papers use a quantitative approach. Based on a sample of 63 registered projects, De Coninck et al. (2007) show that imported technologies originate mostly from the European Union and that the investments from industrialized countries associated with the CDM are small when compared with total foreign direct investments. Dechezlepretre et al. (2008) analyze technology transfers, respectively, in 2293 projects in the CDM pipeline and 644 registered projects. They find transfers in, respectively, 39% and 43% of these projects (accounting for 64% and 84% of emission reduction claims). Using regression analysis, both papers find that larger projects and projects with foreign participants involve more technology transfer. Dechezlepretre et al. (2008) consider other variables such as the technology capabilities of recipient countries, and whether project developers are subsidiaries of Western companies, both of which have significant positive effects on transfers.

The CDM potential of agriculture systems has been reported in the literature, which is briefly reported in this chapter as follows:

Purohit and Michaelowa (2008a) reported the CDM potential of solar water heating systems in India. Purohit (2008) reported small hydro power projects under clean development mechanism in India with a preliminary assessment. Purohit and Michaelowa (2008b) also reported about CDM potential of SPV pumps in India. Purohit and Kandpal (2007) reported the techno-economics of biogas-based water pumping in India with an attempt to internalize CO_2 emission mitigation and other economic benefits. Purohit (2007) reported a financial evaluation of renewable energy technologies for irrigation water pumping in India. Purohit and Kandpal (2005) reported renewable energy technologies for irrigation water pumping in India with projected levels of dissemination, energy delivery and investment requirements using available diffusion models.

Purohit et al. (2006) reported a financial evaluation of solar drying vs. open sun drying. Purohit et al. (2006) reported the energetics of coal substitution by briquettes of agricultural residues. Kumar et al. (2002) reported an approach to the estimation of the value of agricultural residues used as biofuels.

6. FINANCIAL ASPECTS FOR RENEWABLE ENERGY SYSTEMS FOR AGRICULTURE

Renewable energy creates multiple public benefits such as environmental improvement (reduction of power plant greenhouse emissions, thermal and noise pollution), increased fuel diversity, reduction of energy price volatility effects on the economy, national economic security (fossil energy is vulnerable to political instabilities, trade disputes, embargoes and other disruptions (Menegaki, 2008), and increase in economic productivity and GDP through more efficient production processes. It has been estimated that a 10% increase in the renewable energy share avoids GDP losses in the range of \$29–\$53 billion in the US and the EU (\$49–\$90 billion for OECD). These avoided losses offset half the renewable energy OECD investment needs projected by a G-8 Task Force. For the US, each additional kW of renewable energy avoids on average \$250–\$450 in GDP losses. The offset is worth approximately \$200/kW for wind and solar and \$800/kW for geothermal and biomass. The societal valuation of non-fossil alternatives must reflect these avoided GDP losses, whose benefit is not fully captured by private investors (Menegaki, 2008). Furthermore, renewable energy offers development benefits (prevention of money flow abroad, electrification of rural and remote villages in developing countries, and new jobs). Some renewable technologies such as biomass are labor-intensive because growing, harvesting and transporting biomass fuels require labor (Menegaki, 2008). According to the New York State Energy Office, wind energy systems create 25–70% more jobs than conventional power plants producing the same amount of electricity (Menegaki, 2008).

The need for renewable energy investment is apparent because of the Earth's finite resources depletion. Fossil fuels draw on finite resources, which eventually dwindle, and become too expensive or too environmentally damaging to retrieve (Menegaki, 2008). Renewable energy is nevertheless subject to some disadvantages, e.g., wind energy has to face concerns over the visibility and noise of wind turbines, land use, and bird deaths from electrocution or collision with the spinning rotors. Also, solar power systems may generate no air pollution, but the environmental issues here relate to how they are manufactured, installed and disposed of. Energy from biomass derived from the burning of plant matter (e.g., wood) raises air pollution concerns. On the other hand, biomass reduces air pollution by being part of the carbon cycle, reducing carbon dioxide emissions by 90% compared with fossil fuels (Menegaki, 2008).

Last, although on a small scale renewable energy is not competitive when compared with bulk power generation, it is when the external costs of producing energy from fossil fuels are also taken into account (Menegaki, 2008). Renewable energy has practical applications in innovative niche markets, such as consumer products, remote/off-grid and telecommunications. The cost of renewable energy technologies will drop once the benefits of renewable energy, including its sustainable nature and the minimal pollution it creates, are recognized by a larger percentage of the population.

A typical environmental cost-benefit analysis contains the following eight steps (Hanley and Spash, 1993): (1) definition of project (identification of gainers or losers); (2) identification of project impacts (e.g., landscape effects, odor, bird electrocution, job creation); (3) find out which impacts are economically relevant (namely, those that increase the quality and quantity of goods that generate positive utility or cause reduction in the price at which they are supplied); (4) physical quantification of relevant impacts (physical amount of benefit and cost flows and time occurrence identification); (5) monetary valuation of relevant effects; (6) discounting of cost and benefit flows; (7) applying the net present value test; and (8) sensitivity analysis. Valuation takes place at the fifth step, while the evaluation is the whole procedure described above as cost–benefit analysis.

The economic analysis and sizing of solar photovoltaic systems all over the world for a given system load is reported by Chel et al. (2009a, b). Similarly, life cycle cost analysis of an earth to air heat exchanger for storage room space heating/cooling was reported by Chel and Tiwari (2009a). Financial evaluation of renewable energy technologies was reported by Kandpal and Garg (2003). A financial evaluation of photovoltaic projects for decentralized power supply in India was reported by Nouni et al. (2006) and Chel and Tiwari (2010). The levelized unit cost of electricity (LUCE) has been estimated in the range of Rs.28.31–59.16/kW h (US\$ 0.65–1.35/kW h) for PV projects in the capacity range 1–25 kW_P (Nouni et al., 2006). The typical cost break-up of a 25 kW_P PV power project is shown in Figure 14. The capital cost estimated by Nouni et al. (2006) for various PV projects of different capacity is tabulated in Table VIII.

A techno-economic evaluation of small wind electric generator (SWEG) projects for providing decentralized power supply in remote locations in India is reported by Nouni et al. (2007). The levelized unit cost of electricity (LUCE) for small wind generators has been estimated in the range of Rs.4.67–83.02/kW h (US\$ 0.10–1.86/kW h) for wind electric generator projects in the capacity range 3.2–50 kW with annual mean wind speed variation in the range 5–10 m/s given in Table IX (Nouni et al., 2007). Figure 15 shows the cost break-up of a 5 kW small wind electric generator as reported by Nouni et al. (2007).

The delivered cost of electricity in remote areas located in the distance range of 5–25 km is found to vary from Rs.3.18/kW h to Rs.231.14/kW h depending on peak electrical load up to 100 kW and load factor in the case of electricity generated by coal thermal power plants (Nouni et al., 2009). In such remote farm areas/villages, micro-hydro, dual fuel biomass gasifier systems, small wind electric generators and photovoltaic systems could be financially attractive as compared with grid extension for providing access to electricity (Nouni et al., 2009).

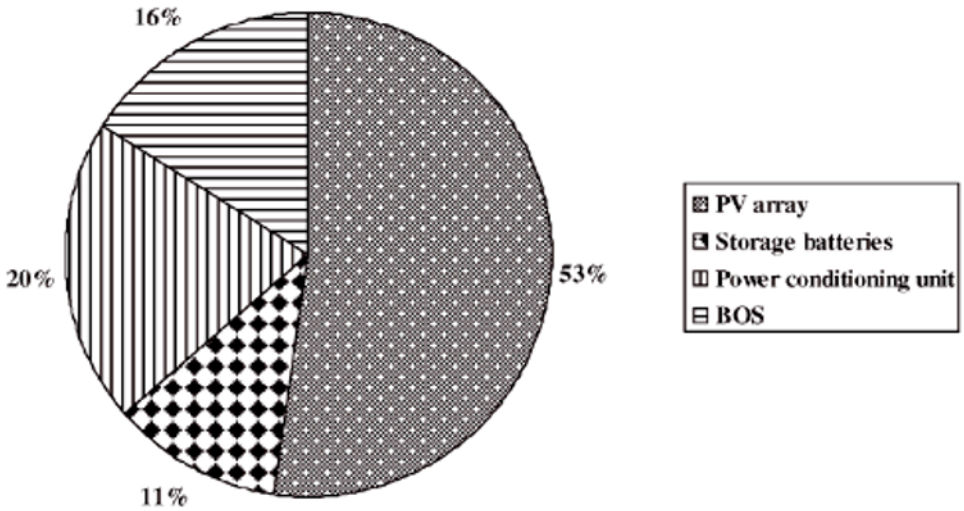

Figure 14. Cost break-up of a 25 kW_P PV project (Nouni et al., 2006). BOS: balance of system.

Table VIII. Capital cost per unit solar PV capacity (Rs./kW_P) (Nouni et al., 2006).

Solar PV capacity (kW_P)	Total installed cost (Rs.)	Capital cost per unit capacity (Rs./kW_P)
2.5	700 000	308 000
5	1 254 000	269 800
10	2 660 000	292 500
25	6 485 000	278 840

Table IX. Levelized unit cost of electricity (LUCE) for small wind generators (Nouni et al., 2007).

Name of location	Annual mean wind speed (m/s)	Energy delivered (kW h)	LUCE (Rs./kW h)
Ayikudy	5.95	1300	38.87
Bhadka	4.19	530	95.42
Bhimnupatnam	5.31	946	53.45
Chalkewadi	5.53	1093	46.24
Dahod	4.58	570	88.70
Dandi	4.03	362	139.66
Harshad	5.56	928	54.43
Jaisalmer	4.93	819	61.69
Kaipdar	4.30	604	83.64
Kakulkonda	6.67	1319	38.33
Kattadimlai	6.64	1460	34.63
Lobavla	4.31	599	84.36
Malwan	3.72	297	170.37
Muppandal	7.08	1769	28.57
Pachpadra	3.35	379	133.42
Panchgani	5.06	765	66.10
Ramanaidukandrika	4.37	474	106.65
Tirumala	5.68	993	50.90
Tuticorin	4.89	740	68.31

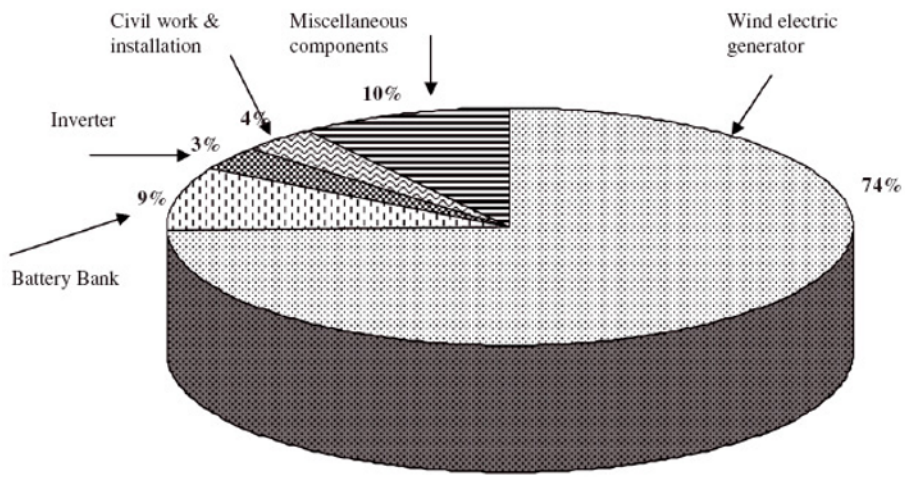

Figure 15. Cost break-up of a 5 kW small wind electric generator (Nouni et al., 2007). LUCE: Levelized unit cost of electricity.

7. GREENHOUSE GAS EMISSION MITIGATION FROM RENEWABLE SYSTEMS

The typical values of CO_2 emission reduction from renewable energy systems are given by Tsoutsos et al. (2008) as follows:

(i) Wind energy (Tsoutsos et al., 2008)

- The average value of annual reduction of CO_2 emissions from wind energy systems is 600 tons of CO_2/GW h.
- For the wind generators the average value of hours of operation per year (in the productive phase) lies between 6000 and 7000 h/year. This value coincides to a good degree with data applicable to the Greek mainland and islands (Papathanasiou and Boulaxis, 2006).
- Applying the previous indicators to the installed power of 360.30 MW, from the contracted investments in the wind systems, by mid-2005, the annual reduction of greenhouse gas emissions is 1405.2 kilotons CO_2. The respective figure for the end of 2005 is 480 MW, but this an unofficial one (Papadopoulos et al., 2008). In any case, the respective CO_2 figure would increase in a linear way.
- Of interest is also the value of the indicator "turn-key cost of the investment", that varies between 770 and 1000 h/kW, being in line with most similar investments in Southern Europe.

(ii) Small hydroelectric plants (Tsoutsos et al., 2008)

- The average value of annual reduction of CO_2 emissions due to small hydroelectric projects is 3200 tons of CO_2/MW.
- Applying the previous indicator to the installed power of 45 MW, from the contracted investments in small hydroelectric projects, the annual reduction in greenhouse gas emissions is some 144 kilotons CO_2.
- Examining the value of the indicator "turn-key cost of the investment" one can notice that this varies between 600 and 2000 h/kW for installations rated between 1 and 10 MW, between 1300 and 4500 h/kW for smaller installations rated between 0.5 and 1.0 MW, and between 1500 and 6000 h/kW for small installations of less than 0.5 MW.

(iii) Solar thermal systems (Tsoutsos et al., 2008)

- The average value of annual reduction CO_2 emissions from Solar Thermal Systems is 840 kg of CO_2/m^2, whereby the reference area is the surface of the collector.
- Applying this indicator to the installed collectors' surface of 7510 m^2, from the contracted investments, results in an annual greenhouse gas emission reduction of 6.3 kilotons CO_2. It has to be noted that this figure refers to centralized systems only.
- The value of the indicator "turn-key cost of the investment" varies between 300 and 500 h/m^2.

(iv) Photovoltaics (Tsoutsos et al., 2008)

- The average value of annual reduction of CO_2 emissions due to photovoltaic systems is 0.6 kg of CO_2/kW h.
- The average annual value of energy production from photovoltaic systems for countries in Southern Europe varies between 1000 and 1400 kW h/kW_p.
- Applying this indicator in the installed power of 1869 kW_p from the contracted investments in photovoltaic systems until now results in an annual reduction in greenhouse gas emissions of 1.6 kilotons CO_2.
- The value of the indicator "turn-key cost of the investment" varies between 4.30 and 9.50 h/W_P.

With respect to photovoltaics it has to be noted that the legislation valid until April 2005 foresees a very low buyback rate, of some 0.078 h/kW h. This is the main reason for the almost negligible interest in photovoltaic.

The new law regulating the buy-back rates for renewable energy technology is expected to raise this figure to 0.45 h/kW h, providing, after all, a reasonable rate (Tsoutsos et al., 2008).

(v) Passive solar systems/passive solar buildings for storage of agricultural products
The greenhouse gas emission reductions from passive building concepts are reported in the literature. The use of the Trombe wall for heating of a honey storage building in a farmhouse was reported by Chel et al. (2008). Similarly, the energy conservation and greenhouse gas emission mitigation from an earth to air heat exchanger for heating/cooling of a building is reported by Chel and Tiwari (2009). The energy-saving potential of passive building in India and its embodied energy analysis was reported by Chel and Tiwari (2009b).

The typical values of indicators for the calculation of the reduction expected from various renewable energy technology investments:

(i) Wind energy (Tsoutsos et al., 2008)
- turn-key investment cost of 900 h/kW;
- for the wind generators average value of hours of operation per year (in the productive phase) of 6500 h/year;
- average value of annual reduction of emissions 600 tons of CO_2/GW h.

(ii) Small hydroelectric plants (Tsoutsos et al., 2008)
- turn-key investment cost of 1200 h/kW;
- average value of annual reduction of emissions 3200 tons of CO2/MW.

(iii) Solar thermal systems (Tsoutsos et al., 2008).
- turn-key investment cost of 300 h/m^2 of solar collector;
- average value of annual reduction of emissions 840 kg of CO_2/m^2 of collector's surface

(iv) Photovoltaic systems (Tsoutsos et al., 2008)
- turn-key investment cost of 7.50 h/W_p;
- average annual value of energy production from photovoltaic systems of 1400 kW h/kW_p;
- average value of annual reduction of emissions 0.6 kg of CO_2/kW h.

The economic impact from the realization of renewable energy technology investment is as shown in Figure 16 reported by Tsoutsos et al. (2008). It can be observed, if the implementation scenario is to take place, apart from the environmental benefit and profit for the period 2007–2010, a serious financial profit will be achieved, of the magnitude of some 350 M€ as reported by Tsoutsos et al.(2008). Furthermore, it can be observed, that for the period 2000–2006 the cost of not reducing the CO_2 emissions equivalent is smaller than the cost of investments, because for this specific period the price for exceeding the emissions' allowances was low (40 €/tons of CO_2 equivalent). This consideration might have been one of the underlying reasons for the sluggish start of the renewable energy technology investment in the years of the ongoing decade, as reported by Tsoutsos et al. (2008).

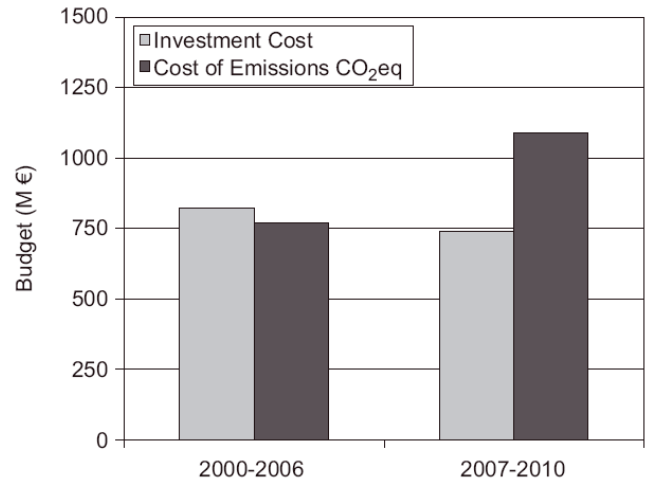

Figure 16. Economic impact from the realization of renewable energy technology investments (Tsoutsos et al., 2008).

8. RESOURCES FOR GETTING STARTED WITH CLEAN ENERGY FARMING

The authors would like to quote the following resources and fields for getting started with clean energy farming for the interested farmers/beginners:

1. For machinery and equipment: Center for Ecological Technology, www.cetonline.org, then click on for farms and businesses.
2. For water savings: Online tool to estimate energy savings using different irrigation methods (http://ipat.sc.egov.usda.gov). Energy Saving Tips for Irrigation (http://attra.ncat.org/publication.html, then click on farm energy, then the name of the publication). Smart Water Use on Your Farm or Ranch, A bulletin on sustainable water use (www.sare.org/publications, then click on bulletins).
3. For building efficiency: Improve Energy Efficiency in Agricultural Buildings (http://attra.ncat.org/attra-pub/agbuildings.html). Energy Estimator for Animal Housing, online tool to estimate energy costs and savings for lighting, ventilation, heating, air circulation, milk cooling and water heating (http://ahat.sc.egov.usda.gov).
4. For energy audits: http://ensave.com, then click on downloads, then sample audits. www.eere.energy.gov/consumer, then click on your home, then energy audits. www.alliantenergy.com, then enter calculator in the search box.
5. For solar energy applications: www.nrel.gov/learning/, then click on Using Renewable Energy, then Farmers and Ranchers, then Photovoltaics (http://attra.ncat.org/energy.php, then click on solar energy).
6. For wind energy applications: The Iowa Energy Center: www.energy.iastate.edu and The Wind Energy Resource Atlas: www.nrel.gov/rredc/, then click on wind resource information. For western regions only: www.windpowermaps.org and www.energyatlas.org. Wind maps and resources, online calculator to evaluate

wind projects and determine feasibility of small wind systems. www.eere.energy.gov, then click on wind and hydropower.

7. For climate change and carbon sequestration: Chicago Climate Exchange (www.chicagoclimatex.com). Resources for farmers to make practical and profitable decisions regarding climate change (www.climateandfarming.org) and Washington State University (http://cff.wsu.edu).
8. For financial resources: Grants and loan guarantees to assist agricultural producers with purchasing renewable energy systems and energy efficiency improvements http://attra.ncat.org/farm_energy/farm_energy_main.php). North Carolina Solar Center (www.dsireusa.org), USDA-Rural Development (www.rurdev.usda.gov/rbs/farmbill).

9. CONCLUSIONS

The concept of sustainable agriculture is predicated on a delicate balance of maximizing crop productivity and maintaining economic stability, while minimizing the utilization of finite natural resources and detrimental environmental impacts (Corwin et al., 1999). Two key issues are physical (the long-term effects of various practices on soil properties and processes essential for crop productivity) and socio-economic (the long-term ability of farmers to obtain inputs and manage resources such as labor, energy, etc.).

The management of energy consumption in agriculture is a worldwide concern because of the adverse effects of CO_2 emissions from fossil fuels, which are generally used as an energy source for various applications in agriculture such as water heating, irrigation, etc. Renewable energy technologies are promoted in many parts of the world for various agriculture applications for mitigating CO_2 emissions associated with fossil fuels. The renewable energy system plays an important role in the agriculture sector for reducing fossil fuel consumption for various applications.

There is strong scientific evidence that the average temperature of the Earth's surface is rising. This is a result of the increased concentration of carbon dioxide and other greenhouse gases in the atmosphere as released by burning fossil fuels. This global warming will eventually lead to substantial changes in the world's climate, which will, in turn, have a major impact on human life and the environment. Therefore, effort has to be made to reduce fossil energy use in agriculture and to promote green energies, particularly in the agriculture sector.

The cost comparison of various technologies for agriculture showed that renewable energy technologies are suitable for any location in the world with the additional benefit of earning carbon credits as compared with conventional fossil fuel-based technologies for agriculture applications.

There are various clean development mechanism (CDM) projects all over the world, especially in India, for promotion of renewable energy technologies in the agriculture sector. These projects require governmental support for them to be implemented in the agriculture sector due to high capital cost investments. Hence, for social benefits the renewable technology in agriculture should be promoted to mitigate climate change, to reduce fossil fuel consumption for agriculture and to protect the environment. Thus, renewable energy technologies for sustainable agriculture play an important role all over the world and their promotion should be manifold in the coming years to approach sustainable development in the world.

Fossil fuel energy use reductions in the agriculture sector can be easily achieved by promotion of renewable energy technologies for various applications. This study was a step to demonstrate the use of renewable technology in agriculture for a sustainable environment. The adoption of green or sustainable approaches to the way in which society is run is seen as an important strategy in finding a solution to the energy problem. The key factors to reducing and controlling CO_2, which is the major contributor to global warming, are the use of alternative approaches such as renewable systems for energy generation and the exploration of how these alternatives are used today and may be used in the future as green energy sources. These benefits would be dispersed in remote rural areas where they are greatly needed and can serve as linkages for further rural economic development. The nations as a whole would benefit from savings in foreign exchange, improved energy security, and socio-economic improvements. The international community would benefit from pollution reduction, climate mitigation, and the increased trading opportunities that arise from new income sources.

The non-technical issues, which have recently gained attention, include:

(1) renewable as a CO_2 neutral replacement for fossil fuels;
(2) greater recognition of the importance of renewable energy, particularly the modern solar PV water pump at the policy and planning levels;
(3) greater recognition of the difficulties of gathering good and reliable renewable energy data, and efforts to improve it.

Acknowledgements: The authors are very thankful to Dr. Eric Lichtfouse, Editor-in-Chief of Agronomy for Sustainable Development for inviting us to write this review article in its present form. We would like to gratefully acknowledge the appreciation and suggestions from the reviewers of this reputed journal. The authors are thankful to all the scientific publications listed in the references for providing the information on the significance of sustainable agriculture based on renewable energy technologies all over the world. The authors also gratefully acknowledge the resources mentioned in Section 8.

REFERENCES

Baille A., Lopez J.C., Bonachela S., Gonzalez-Real M.M., Montero J.I. (2006) Night energy balance in a heated low-cost plastic greenhouse, Agric. For. Meteorol. 137, 107–118.

Boonlong P. (1984) Solar-assisted tobacco curing, Paper presented at the Regional Seminar on Solar Drying, Yogyakarta, Indonesia, 28–30 August.

Baruah D. (1995) Utilization pattern of human and fuel energy in the plantation, J. Agric. Soil Sci. 8, 189–192.

Chel A., Tiwari G.N. (2009a) Performance evaluation and life cycle cost analysis of earth to air heat exchanger integrated with adobe building for New Delhi composite climate, Energy Build. 41, 56–66.

Chel A., Tiwari G.N. (2009b) Thermal performance and embodied energy analysis of a passive house – case study of vault roof mud-house in India, Appl. Energy 86, 1956–1969.

Chel A., Tiwari G.N. (2010) Stand-alone photovoltaic (PV) integrated with earth to air heat exchanger (EAHE) for space heating/cooling of adobe house in New Delhi (India), Energy Convers. Manage. 51, 393–409.

Chel A., Nayak J.K., Kaushik G. (2008) Energy conservation in honey storage building using Trombe wall, Energy Build. 40, 1643–1650.

Chel A., Tiwari G.N., Chandra A. (2009a) Sizing and cost estimation methodology for stand-alone residential PV power system, Int. J. Agile Syst. Manage. 4, 21–40.

Chel A., Tiwari G.N., Chandra A. (2009b) Simplified method of sizing and life cycle cost assessment of building integrated photovoltaic system, Energy Build. 41, 1172–1180.

Coninck D., Haake H., Linden F.N. (2007) Technology transfer in the Clean Development Mechanism, Clim. Policy 7, 444–456.

Corwin D.L., Loague K., Ellsworth T.R. (1999) Assessing non-point source pollution in the vadose zone with advanced information technologies, in: Corwin D.L., Loague K., Ellsworth T.R. (Eds.), Assessment of non-point source pollution in the vadose zone. Geophysical Monogr, 108, AGU, Washington, DC, USA, pp. 1–20.

Dechezlepretre A., Glachant M., Meniere Y. (2008) The clean development mechanism and the international diffusion of technologies: an empirical study, Energy Policy 36, 1273–1283.

Eker B. (2005) Solar powered water pumping systems, Trak J. Sci. 3, 7–11.

Frey G.W., Linke D.M. (2002) Hydropower as a renewable and sustainable energy resource meeting global energy challenges in a reasonable way Energy Policy 30, 141261–141265.

Gerber J.M. (1992) Farmer participation in research: a model for adaptive research and education, Am. J. Alternative Agr. 7, 118–121.

Gustav R., Anne H., Thomas F., Christian P., Felipe T., Reinhard H. (2008) Potentials and prospects for renewable energies at global scale, Energy Policy 36, 4048–4056.

Hanley N., Spash C.L. (1993) Cost-benefit analysis and the environment, Edward Elgar, Publishing Company, Brookfield, VT.

IEA (2001) Technology without Borders: Case Studies of Successful Technology Transfer, International Energy Agency, Paris.

IEA (2003) Renewables for power generation: status and prospects, International Energy Agency, Paris.

IPCC (2000) Methodological and Technological Issues in Technology Transfer, A Special Report of Working Group III of the Intergovernmental Panel on Climate Change, Cambridge University Press, Cambridge.

Jensen M.H., Malter A.J. (1995) Protected Agriculture– A global review, World Bank Technical Paper 253, 157.

Kandpal, T.C., Garg H.P. (2003) Financial Evaluation of Renewable Energy Technologies, Macmillan India Ltd., New Delhi.

Kathuria V. (2002) Technology transfer for GHG reduction: a framework with application to India, Technol. Forecast Soc. 69, 405–430.

Kenna J.P., Gillett W.B., I.T. Power., Halcrow S.W. (1985) Handbook on Solar Water Pumping, World Bank, Washington DC and I T Publications, London.

Kessler J.R. Jr. (2006) Starting a Greenhouse Business, ANR-0691, Alabama Cooperative Extension System, Alabama.

Khoiyangbam R.S., Kumar S., Jain M.C. (2004) Methane losses from floating gasholder type biogas plants in relation to global warming, J. Sci. Ind. Res. 63, 344–347.

Kumar A., Purohit P., Rana S., Kandpal T.C. (2002) An approach to the estimation of the value of agricultural residues used as biofuels, Biomass Bioenergy 22, 195–203.

Lal R. (2008) Soils and sustainable agriculture. A review, Agron. Sustain. Dev. 28, 57–64.

Lichtfouse E., Navarrete M., Debaeke P., Souchère V., Alberola C., Ménassieu J. (2009) A review, Agron. Sustain. Dev. 29, 1–6.

Meah K., Ula S., Barrett S. (2008) Solar photovoltaic water pumping- opportunities and challenges, Renew. Sustain. Energy Rev. 12, 1162–1175.

Menegaki A. (2008) Valuation for renewable energy: A comparative review, Renew. Sustain. Energy Rev. 12, 2422–2437.

Nouni M.R., Mullick S.C., Kandpal T.C. (2006) Photovoltaic projects for decentralized power supply in India: a financial evaluation, Energy Policy, 34, 3727–3738.

Nouni M.R., Mullick S.C., Kandpal T.C. (2007) Techno-economics of small wind electric generator projects for decentralized power supply in India, Energy Policy 35, 2491–2506.

Nouni M.R., Mullick S.C., Kandpal T.C. (2009) Providing electricity access to remote areas in India: Niche areas for decentralized electricity supply, Renew. Energy 34, 430–434.

Ockwell D.G., Watson, J., MacKerron, G., Pal, P., Yamin F. (2008) Key policy considerations for facilitating low carbon technology transfer to developing countries, Energy Policy 36, 4104–4115.

Omer A.M. (2008) Green energies and the environment, Renew. Sustain. Energy Rev. 12, 1789–1821.

Papadopoulos A.M., Glinou G.L., Papachristos D.A. (2008) Developments in the utilization of wind energy in Greece, Renew Energy 33, 105–110.

Papathanassiou S.A., Boulaxis NG. (2006) Power limitations and energy yield evaluation for wind farms operating in island systems, Renew. Energy 31, 457–479.

Passive and Active Solar Domestic Hot Water Systems, North Carolina Solar Center, Technical Paper No. SC122, North Carolina State University, Raleigh, North Carolina, June 2002.

Patlitzianas K.D., Doukas H., Kagiannas A.G., Psarras J. (2008) Sustainable energy policy indicators: Review and recommendations, Renew. Energy 33, 966–973.

Patranon R. (1984) Solar thermal processes in Thailand: a study on natural convection cabinet drying, final report, USAID-Thai Renewable Non-Conventional Energy Cooperation Project, King Mongkut's Institute of Technology Thonburi, Bangkok.

Pilz G. (2009) Renewable energy the way to protect the climate, International conference on combating challenges of climate change, Vigyan Bhawan, New Delhi, February 7–8.

Purohit P. (2007) Financial evaluation of renewable energy technologies for irrigation water pumping in India, Energy Policy 35, 3134–3144.

Purohit P. (2008) Small hydro power projects under clean development mechanism in India: A preliminary assessment, Energy Policy 36, 2000–2015.

Purohit P., Kandpal T.C. (2005) Renewable energy technologies for irrigation water pumping in India: projected levels of dissemination, energy delivery and investment requirements using available diffusion models, Renew. Sustain. Energy Rev. 9, 592–607.

Purohit P., Kandpal T.C. (2007) Techno-economics of biogas-based water pumping in India: an attempt to internalize CO2 emissions mitigation and other economic benefits Renew. Sustain. Energy Rev. 11, 1208–1226.

Purohit P., Michaelowa A. (2008a) CDM potential of solar water heating systems in India, Sol. Energy 82, 799–811.

Purohit P., Michaelowa A. (2008b) CDM potential of SPV pumps in India, Renew. Sustain. Energy Rev. 12, 181–199.

Purohit P., Kumar A., Kandpal T.C. (2006a) Solar drying vs. open sun drying: a framework for financial evaluation, Sol. Energy 80, 1568–1579.

Purohit P., Tripathi A.K., Kandpal T.C. (2006b) Energetics of coal substitution by briquettes of agricultural residues, Energy 31, 1321–1331.

Rio P.D. (2007) Encouraging the implementation of small renewable electricity CDM projects: an economic analysis of different options, Renew. Sustain. Energy Rev. 11, 1361–1387.

SARE (2006) Clean Energy Farming: Cutting Costs, Improving Efficiencies, Harnessing Renewables, Sustainable Agriculture Research and Education (SARE), Cooperative State Research, Education, and Extension Service, USDA, under Award No. 2006-47001-03367 (www.sare.org/publications/energy.htm).

Santamouris M., Balaras C.A., Dascalaki E., Vallindras M. (1994) Passive solar agricultural greenhouses: a worldwide classification and evaluation of technologies and systems used for heating purposes, Sol. Energy 53, 411–426.

Schneider M., Holzer A., Hoffmann V.H. (2008) Understanding the CDM's contribution to technology transfer, Energy Policy 36, 2930–2938.

Sethi, V.P., Sharma S.K. (2007) Survey of cooling technologies for worldwide agricultural greenhouse applications, Sol. Energy 81, 1447–1549.

Sethi, V.P., Sharma, S.K. (2009) Survey and evaluation of heating technologies for worldwide agricultural greenhouse applications, Sol. Energy 82, 832–859.

Siri J.M. (1989) Greenhouses in Egypt, protected cultivation in the Mediterranean climate, FAO, Rome.

Soponronnarit S. (1995) Solar drying in Thailand, Energy Sustain. Dev. 2, 19–25.

Thakur C., Mistra B. (1993) Energy requirements and energy gaps for production of major crops in India, Agric. Situation India 48, 665–689.

Tsoutsos T., Papadopoulou E., Katsiri A., Papadopoulos A.M. (2008) Supporting schemes for renewable energy sources and their impact on reducing the emissions of greenhouse gases in Greece, Renew. Sustain. Energy Rev. 12, 1767–1788.

Venkatesh A. (1994) Experimental observations on a continuous flow type domestic solar water heater, Energy Convers. Manage. 35, 1041–1048.

Verlodt H. (1990) Greenhouses in Cyprus, protected cultivation in the Mediterranean climate, FAO, Rome.

Whiffen H.J.H., Haman D.Z., Baird C.D. (1992) Photovoltaic-powered Water Pumping for Small Irrigation Systems, Appl. Eng. Agric. 8, 625–629.

Yaldiz O., Ozturk H., Zeren Y. (1993) Energy usage in production of field crops in Turkey: Fifth International Congress on Mechanization and Energy Use in Agriculture, Kusadasi, Turkey, October 11–14.

Yang Z. (1999) Should the north make unilateral technology transfers to the south? North-South cooperation and conflicts in responses to global climate change, Resour. Energy Econ. 21, 67–87.

Yang Z., Nordhaus W.D. (2006) Magnitude and direction of technological transfers for mitigating GHG emissions, Energy Econ. 28, 730–741.