HAL
open science

Electron-nuclear recoil discrimination by pulse shape analysis

Johannes Elbs, Yuriy M. Bunkov, Eddy Collin, Henri Godfrin, Olga Suvorova

To cite this version:

Johannes Elbs, Yuriy M. Bunkov, Eddy Collin, Henri Godfrin, Olga Suvorova. Electron-nuclear recoil discrimination by pulse shape analysis. Journal of Low Temperature Physics, 2008, 150 (3-4), pp.536. 10.1007/s10909-007-9603-7 . hal-00921429

HAL Id: hal-00921429

https://hal.science/hal-00921429v1

Submitted on 20 Dec 2013

HAL is a multi-disciplinary open access archive for the deposit and dissemination of scientific research documents, whether they are published or not. The documents may come from teaching and research institutions in France or abroad, or from public or private research centers.

L'archive ouverte pluridisciplinaire **HAL**, est destinée au dépôt et à la diffusion de documents scientifiques de niveau recherche, publiés ou non, émanant des établissements d'enseignement et de recherche français ou étrangers, des laboratoires publics ou privés.

Noname manuscript No.
(will be inserted by the editor)

J. Elbs[1] · **Yu. M. Bunkov**[1] · **E. Collin**[1] ·
H. Godfrin[1] · **O. Suvorova**[2]

Electron- nuclear recoil discrimination by pulse shape analysis.

August 1, 2007

Keywords superfluid ^{3}He, bolometry, dimers

Abstract In the framework of the "ULTIMA" project, we use superfluid ^{3}He bolometers for the direct detection of single particle events, aimed for a future use as a dark matter detector. One parameter of the pulse shape observed after such an event is the thermalisation time constant τ_b. Until now it was believed that this parameter only depends on geometrical factors and superfluid ^{3}He properties, and that it is independent of the nature of the incident particles. In this report we show new results which demonstrate that a difference for muon- and neutron events, as well as events simulated by heater pulses exist. The possibility to use this difference for false event discrimination in a future dark matter detector will be discussed.

1 INTRODUCTION

^{3}He is a very appealing target matter for the direct search of non-baryonic dark matter[1,2]. Various attractive features special to ^{3}He can be pointed out: the large neutron capture cross section provides an inherent discrimination mechanism against neutrons, the particle which is normally hardest to reject. The large number of unpaired spins per unity of mass gives an advantage in a large number of WIMP models which predict a spin dependent interaction[4,5]. This sensitivity to the so-called axial channel makes ^{3}He complementary to the most advanced detectors like Edelweiss[6] and CDMS[7], which are mainly sensitive to the spin independent interaction. The ^{3}He atoms being much lighter than the expected WIMP masses, the recoil energy would be limited to $E < 6$ keV, allowing for an additional

1: Institut Néel, CNRS/UJF, 25, av. des Martyrs, 38042 Grenoble, France
Tel.: +33 4 76 88 12 52
Fax: +33 4 76 87 50 60
E-mail: yuriy.bunkov@grenoble.cnrs.fr
2: Institute for Nuclear Research, RAS, 117312, Moscow, Russia

discrimination by rejection of events above this threshold, and thus an enhanced signal to noise ratio. The absolute purity of ^{3}He at the working temperatures of $\approx$130 μK prevents the presence of false event producing radioactive impurities in the sensitive medium itself. The large transparency to γ-rays reduces the expected false event rate further. Because of the existence of only one thermal bath, the Bogoliubov quasiparticle excitations, problems of two or more badly coupled thermal baths do not arise[3].
Numerical simulations show that with a large bolometer, a sensitivity to neutralinos within a large number of supersymetric models would be obtained[4,5]. Additionally those simulations show that using a matrix design of a lot of bolometric cells should provide a very good overall rejection to background events. Using a 3-cell prototype, a certain number of the requirements of a future dark matter detector have already been demonstrated: A 1 keV sensitivity has been achieved[8], with further potential of improvement by replacement of the currently used NbTi Vibrating Wire Resonator thermometers with specially designed, microfabricated Silicon resonators. Coincidences between neighbouring cells, mainly produced by cosmic muon events, were observed and support the idea of a discrimination by coincident measurement. The possibility of a precise energy calibration by introduction of a well measured amount of energy using a second Vibrating Wire Resonator was first described in Ref.[9], and many details can be found in Ref.[8] . This calibration is special as it does not rely on the use of a radioactive reference source as for most other bolometric detectors.
For a future dark matter detector, an alternative channel of discrimination would be highly desirable. The main idea is the parallel measurement of either scintillation light or ionisation charges. The ratio of energy going to scintillation/ionisation is observed to be different between particles interacting by electronic and nuclear recoil in the case of ^{4}He[10], and the differences found between heat measured and total heat release expected in superfluid ^{3}He bolometers show that this effect persists in our working conditions[8]. An experiment testing the realisation of the ionisation channel is in preparation. In this paper we show experimental result which indicate that a simple pulse shape analysis could provide an additional discrimination mechanism.

2 EVENT SHAPE

The heart of our particle detectors are small cylindrical copper cells of Volume V =0.13 cm^3 filled with superfluid ^{3}He-B, similar to the quasiparticle blackbody radiator proposed by Fisher *et al.*[11]. These cells are immersed inside a superfluid ^{3}He-B bath. Thermal contact between the cells and the bath is achieved by small orifices of $S = 200$ μm diameter. When a particle interacts inside the cell, the corresponding energy deposition will heat up the cell, and the quasiparticle density will rise. Subsequently, the cell will thermalise with the outer bath with a time constant τ_b on the order of a few seconds.

In our current setup, three adjacent cells are operated at the same time. The main idea is to demonstrate experimentally that the discrimination mechanism proposed by Mayet *et al.*[4] is feasible: strongly interacting particles, in our case mainly cosmic muons, which cross several cells will leave simultaneously an energy in more than one cell at a time as opposed to weakly interacting particles

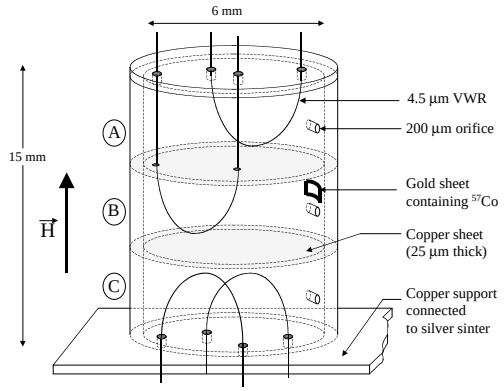

Fig. 1 Schematic view of the 3 cell bolometer. The cells are filled with superfluid ^{3}He and immersed into a superfluid ^{3}He bath, which functions as the heat sink. The thermal contact is obtained by the small orifices. Each cell contains a VWR thermometry and can be operated independently. One of the cell contains a second VWR for doing calibration pulses. The ^{57}Co source in another cell was used to demonstrate the 1 keV sensitivity[8].

which will not show coincidences. A scheme of the 3 cell bolometer is presented in fig. 1.

An important part for the functioning of the bolometers is the thermometry. High precision thermometry is achieved by the use of Vibrating Wire Resonators (VWR)[12,13]. The VWR we use is a fine superconducting NbTi wire, bent into a semi circular shape, excited by the Laplace force. When driven well below the pair breaking velocity, the interaction of a VWR with the superfluid ^{3}He-B is given by the scattering of quasiparticles on the wire surface, and a frictional force linear with velocity is observed. A frequency sweep over the VWR resonance thus delivers a Lorentzian lineshape. The Full Width at Half Maximum (FWHM) $W(T)$ depends on the quasiparticle (QP) density which changes exponentially with temperature. In the zero field limit, $W(T)$ writes[14]

$$W(T) = \alpha \exp(-\Delta/k_B T), \tag{1}$$

where Δ is the superfluid gap at zero temperature and zero field, and α a prefactor which depends on the geometry of the VWR and on properties of the liquid. It is this bijection which will lead us to use in the following the terms *VWR width* and *temperature* interchangeably.

After a heating event caused for example by a cosmic particle, the QP density inside the cell will suddenly rise, and then go back to the initial QP density by thermalisation via the hole. This relaxation is an exponential process, with the time constant τ_b determined by the geometry, i.e. mainly the ratio V/S and the QP mean group velocity $\overline{v_g}$. We thus can write the equilibrium VWR width after an event at t_0, of amplitude A and at base temperature W_0 as

$$W_{eq}(t) = W_0 + Ae^{-\frac{t-t_0}{\tau_b}}\Theta(t-t_0), \tag{2}$$

with $\Theta(t)$ the Heavyside step function. For a flat hole, i.e. a hole with diameter $\gg$ thickness, τ_b can be calculated, considering that effects introduced by tex-

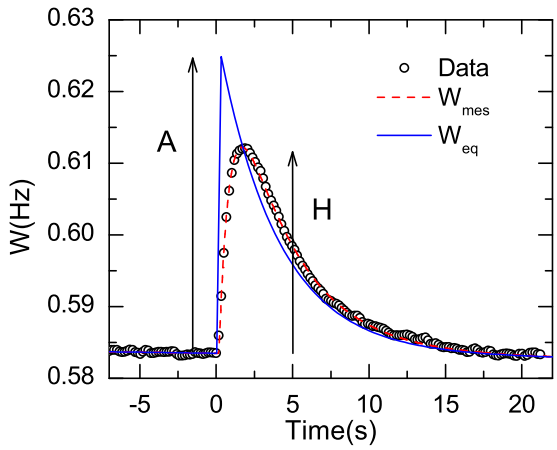

Fig. 2 (Color on-line) A typical event, probably caused by a cosmic muon (black circles). The data can be fitted (red dashed line) with eq. 4. Using the obtained fit parameters A and τ_b, the equilibrium linewidth and thus the quasiparticle density can be illustrated using eq. 2 (blue bold line).

tures are negligible:

$$\tau_b = 4\frac{V}{S}\frac{1}{\overline{v_g}} \tag{3}$$

As $\overline{v_g}$ shows a $T^{1/2}$ dependence, τ_b is expected to only vary slowly with temperature. It must be pointed out that our hole has a diameter of 200 μm and a thickness of 400 μm, which should increase the real value considerably due to the possibility of backscattering in the hole on rough surfaces, and via Andreev scattering.

The VWR being a macroscopic object, it can not immediately adapt to a new equilibrium position after a quick temperature change, but does so with a delay, determined by the time constant $\tau_w = \frac{1}{\pi W_0}$. The measured wire linewidth is thus

$$W_{mes}(t) = W_0 + A(e^{-\frac{t-t_0}{\tau_b}} - e^{-\frac{t-t_0}{\tau_w}})\Theta(t-t_0). \tag{4}$$

A typical particle event together with a fit using this formula is presented in fig. 2. As can be seen, this formula seems to represent very well the experimentally obtained data. One important prerequisite for the above formula to work has not been mentioned yet: the usual hypothesis is that the internal thermalisation, i.e. the processes which lead from the initial, very localised, ionisation to a homogeneous thermal quasiparticle distribution inside the cell, is very fast compared to the other time constants involved. As the thermalisation is supposed to happen by nonlinear processes on the cell walls, the corresponding time constant should be on the order of the time of flight of the quasiparticles towards the cell walls. This time constant is obtained by dividing the cell dimensions by the mean group velocity and amounts in our case to ≈0.3 ms, which is three orders of magnitudes smaller than typical VWR response times. Experimentally this hypothesis is supported by the sharp slope of the rising edge and the good agreement between eq. 4

and the measured peaks. The expectation is thus that internal thermalisation is virtually instantaneous, and that no information about the nature of the interaction survives long enough to have an influence on our measurements.

3 PEAKSAHPE ANALYSIS

In order to study whether all of the above can be verified experimentally, a large number of measured peaks, acquired during about 48 h in the presence of an AmBe neutron source has been fitted using eq. 4. For the fits, the baseline W_0 has been determined first by fitting about 20 points before an event with a constant, and the main fit with eq. 4 has then been done with the three free parameters A, τ_b, t_0. As for the moment we were mainly interested in obtaining clear results for the τ_b parameter, the analysis is limited to relatively high energetic events with E>100 keV. An improved analysis which potentially extends the analysed region down to 25 keV events is a work in progress. The results as a function of temperature are presented in fig. 3. In this figure, the particle events can be separated by two discrimination mechanisms in three groups: Firstly, it is well established that neutrons have a high cross section to undergo a neutron capture reaction, releasing a well defined energy of 764 keV, of which about 655 keV are released as heat. The remaining events can be separated into events leaving at the same time an energy in an adjacent cell, corresponding most probably to cosmic muon events, and events which show no coincidence, corresponding to either cosmic muon events crossing on its trajectory none of the other cells, or an event caused by other particles.

The first remark which can be made is that a temperature dependence does indeed exist. A $T^{-1/2}$ law is expected due to the temperature dependence of the mean group velocity, but the observed data fits better with a T^{-2} law. Additionally, the observed absolute values are for example at 140 μK more than 5 times higher than the calculated value of 0.64 s using the flat hole approximation (eq. 3). We do not know the reason for this quite strong temperature dependence. One mechanism could be that textures in and near the orifice prevent the lowest energetic excitations to leave the cell, as they might be forced to Andreev backscatter even by small energy barriers.

In fig. 4 a part of the data for the temperature slice 0.140 mK$< T <$0.143 mK is plotted with the energy resolved on the y-axis. The main observation from both graphs is the appearance of two different bands of values. All neutron capture events and all heater pulses show low values of τ_b, with the heater pulses in average even smaller than the neutron capture events. All muon events identifiable by coincident pulses show high values of τ_b. Non coincident low energy events are mainly found in the upper band, but some are found in the lower band. As explained, muon events can, but not necessarily have to show coincidence. On the other hand, the neutron source was placed in the plane horizontal to the cell alignment. This, and the relatively small recoil cross section means that coincidences for neutron recoil events should be very rare. In the absence of a neutron source, the lower band completely disappears, these events with low τ_b are thus clearly linked to the presence of the neutron source. We thus identify in fig. 4 the region with E <600 keV and τ_b>3.7 s as events caused by cosmic muons, and the region with E <600 keV and τ_b<3.6 s as neutron recoil events.

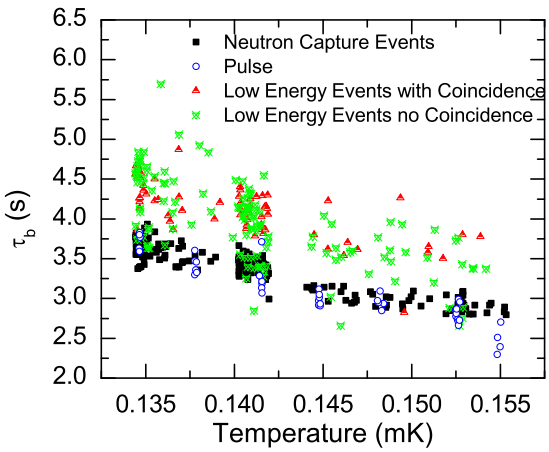

Fig. 3 (Color on-line) τ_b parameter for a large number of particle events and heater pulses as a function of temperature. Particle events releasing an energy of about 650 keV (black squares) are identified as neutron capture events. Events releasing less than this energy are separated in events showing and not showing coincidence with the neighbouring cell. Two bands of values of τ_b can be clearly identified, with all neutron capture events and heater pulses being in the lower band, and all events showing coincidence in the upper band.

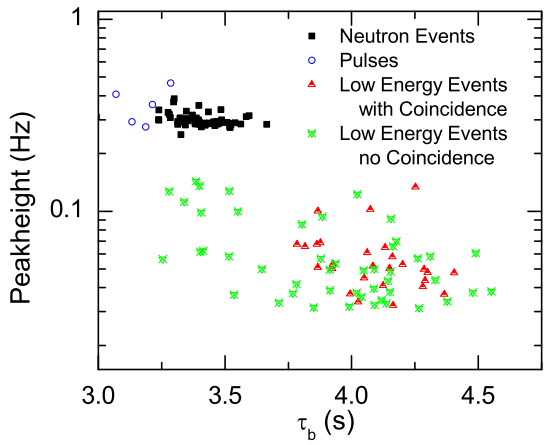

Fig. 4 (Color on-line) For a small slice of temperature (0.140 mK$< T <$0.143 mK), the peak height is plotted as a function of the τ_b parameter. The calibration factor as determined by heater pulses is σ =0.44 mHz/keV. The neutron capture events are clearly identified by the narrow band of energies around 655 keV (0.29 Hz). For lower energies, we identify the region of high values of τ_b as muon events, and the region of low values of τ_b as neutron recoil events. It must be stressed out that our energy resolution using algorithms which do not try to find good values for τ_b is much better (in the best cases around 1 keV) than what this graph suggests. An improved analysis which tries to extent this graph to lower energies is a work in progress.

4 Discussion and application for a future dark matter detector

It is not easy to imagine what can be the origin of this effect. It is necessary to find some mechanism which lives long enough to have an influence on the order of seconds, and which at the same time is different for different energy depositions. For instance our best guess is a delayed heat release from metastable triplet ^{3}He dimers. Scintillation measurements done on scintillation in ^{4}He and ^{3}He show that their radiative lifetime is about 13 s. Additionally it has been shown that during the rapid processes after the primary ionisation a large amount of these dimers form. The fraction of the deposited energy stored in these metastable states depends on the particles interacting. First simulations based on a non radiative deexcitation, and thus a partially delayed heat release look very promising.

The current work inscribes itself in a long term project (ULTIMA) which intends to build a dark matter detector with superfluid ^{3}He as the target matter. One crucial point in every dark matter detector is an efficient method to distinguish between events caused by ordinary particles and the weakly interacting particles which are searched. Mayet *et al.*[5] already showed that a very high overall rejection factor can be obtained using a high number of bolometric cells arranged in a matrix. Nevertheless, a second channel of discrimination would be highly desirable. The possibility to measure ionisation at the same time as the heat release is under investigation. As the ratio heat release/ionisation is expected to depend on the nature of the particle interaction, this has good potential to provide a reliable alternative discrimination, but at the cost of an increased complexity of the experimental setup.

The interest for the effect presented in this paper is that it does not come at an additional experimental cost. Nevertheless, in order to use this pulse shape analysis for discrimination, it must be shown in future experiments that the increased value of τ_b exists not only for muons, but in general for particles interacting by electronic recoil, and that the effect prevails down to the energy range of interest (1-6 keV). Additionally it is highly desirable to get a good understanding for the underlying mechanism, in order to optimise the future bolometers.

ACKNOWLEDGMENTS

We thank Prof. A. Parshin, Prof. G. Seidel and Dr. C. Winkelmann for useful discussions. This work was done in the framework of the ULTIMA project of the “Agence Nationale de la Recherche", France (NTO5-2_41909), under a support of French-Russian program of cooperation (Institute NEEL, CNRS - Institute Kapitza, RAS, project 19058) .

References

1. G.R. Pickett, in: L. Gonzales-Mestres, D. Perret-Gallix (Eds.), Proceedings of the Second European Workshop on Neutrinos and Dark Matter Detectors, 1988, p. 377.

2. Yu.M. Bunkov, S.N. Fisher, H. Godfrin, A. Guénault, G.R. Pickett, in: T. Girard, A. Morales, G. Waysand (Eds.), Proceedings of International Workshop on Superconductivity and Particle Detection, World Scientific, Singapore, 1995, pp. 2126.
3. Apart from solid ^{3}He adsorbed on the cell walls, which can be removed by *ppm* adjunction of ^{4}He.
4. F. Mayet, D. Santos, G. Perrin, Yu.M. Bunkov, H. Godfrin, *Nucl. Instr. and Meth. A* **455**, 554 (2000).
5. F. Mayet, D. Santos, Yu.M. Bunkov, E. Collin, H. Godfrin, *Phys. Lett. B* **538**, 257 (2002).
6. V. Sanglard, et al., *Phys. Rev. D* **71**, 122003 (2005).
7. D.S. Akerib, et al., *Phys. Rev. Lett.* **96**, 011302 (2006).
8. C.B. Winkelmann, J. Elbs, E. Collin, Yu.M. Bunkov and H. Godfrin, *Nucl. Instr. and Meth. A* **574**, 264 (2007).
9. C. Bäuerle, Yu.M. Bunkov, S.N. Fisher and H. Godfrin, *Phys. Rev. B* **57**, 14381 (1998).
10. D.N. McKinsey, et al., *Phys. Rev. A* **67** 62716 (2003).
11. S.N. Fisher, A.M. Guénault, C.J. Kennedy and G.R. Pickett, *Phys. Rev. Lett.* **69**, 1073 (1992).
12. A.M. Guénault, V. Keith, C.J. Kennedy S.G. Mussett, and G.R. Pickett, *J. Low Temp. Phys.* **62**, 511 (1986).
13. C.B. Winkelmann, E. Collin, Yu.M. Bunkov and H. Godfrin, *J. Low Temp. Phys.* **135**, 3 (2004).
14. S.N. Fisher, G.R. Pickett and R.J. Watts-Tobin, *J. Low Temp. Phys.* **83**, 225 (1991).
15. D.I. Bradley, Yu.M. Bunkov, D.J. Cousins, M.P. Enrico, S.N. Fisher, M.R. Follows, A.M. Guénault, W.M. Hayes, G.R. Pickett and T. Sloan, *Phys. Rev. Lett.* **75** 1887 (1995).