HAL
open science

Network Internal Signal Feedback and Injection: Interconnection Matrix Design

Mykhailo Zarudniev, Anton Korniienko, Gérard Scorletti, Patrick Villard

To cite this version:

Mykhailo Zarudniev, Anton Korniienko, Gérard Scorletti, Patrick Villard. Network Internal Signal Feedback and Injection: Interconnection Matrix Design. 52nd IEEE CDC, Dec 2013, Florence, Italy. pp.WeA14.4, 10.1109/CDC.2013.6760246 . hal-00871119

HAL Id: hal-00871119

https://hal.science/hal-00871119v1

Submitted on 2 Jan 2014

HAL is a multi-disciplinary open access archive for the deposit and dissemination of scientific research documents, whether they are published or not. The documents may come from teaching and research institutions in France or abroad, or from public or private research centers.

L'archive ouverte pluridisciplinaire **HAL**, est destinée au dépôt et à la diffusion de documents scientifiques de niveau recherche, publiés ou non, émanant des établissements d'enseignement et de recherche français ou étrangers, des laboratoires publics ou privés.

Network internal signal feedback and injection: Interconnection matrix redesign

Mykhailo Zarudniev, Anton Korniienko,
Gérard Scorletti, Patrick Villard

***Abstract*— The design of systems defined as networks (interconnections) of identical subsystems emerges as an interesting engineering problem, with some open issues. One of these issues is how to "retune" the interconnection in order to ensure the stability and the performance of the system. Based on the LFT representation and on the input-output framework, we propose in this paper some efficient "retuning" methods using convex optimization involving LMI constraints. The proposed approach can be interpreted as an extension of usual state space methods. Its application is investigated for the design of a network of PLLs.**

I. INTRODUCTION

In Automatic Control, a popular and successful paradigm for Linear Time Invariant (LTI) systems is the state space representation approach. In this approach, a large number of efficient analysis and synthesis methods were obtained using matrix computation and more recently convex optimization over Linear Matrix Inequality (LMI) constraints [1], [2]. Another interest is the physical realization of a state space model as a block diagram involving integrators and constant gains. An interesting application of the Automatic Control methods is the design of systems, see e.g. [3]–[5]. From this point of view, the well-known state feedback control problem can have an interesting interpretation: for a system realized as a block diagram involving integrators and constant gains, how to retune some gains in order to achieve stability and a certain level of performance.

Recently, a strong interest emerged in Microelectronics for the design of networks of phase locked loops (PLL), where the PLLs are identical [6]. The purpose is to achieve the synchronization of the PLLs with the design specifications formulated in terms of frequency constraints which can be expressed using the H_∞ norm [7]. This problem more generally pertains to the oscillator synchronization [8]–[11]. These networks can be interpreted as block diagrams involving constant gains and identical dynamical LTI systems. These dynamical systems are usually different from integrators. In this paper, we investigate the extension of some feedback synthesis methods usual for the LTI state space approach to the case of models which can be realized as block diagrams involving (a matrix of) constant gains, in the sequel referred to as the interconnection, and dynamical LTI systems, referred to as the subsystems. The proposed methods are efficient, since they are based on convex optimization involving LMI constraints. With the proposed framework, we reveal that it is possible to use convex optimization in order to address some control problems which are not convex when formulated in the state space representation formulation.

To this purpose, we use the Linear Fractional Representation modeling usually referred to as LFT modeling. This modeling allows to represent general block diagrams, including the block diagrams corresponding to state space representations [12]. Thanks to the separation of graph theorem and the S-procedure, this modeling is a nice representation to systematically derive stability and performance conditions [13]. Roughly speaking, if the performance is expressed as a(n integral) quadratic constraint on the input and output signals, the S-procedure allows to evaluate the performance of the overall system from the performance of the subsystems. Though the general framework has been largely investigated from the 90's, its potential interest is still largely unexplored, even if many interesting results were obtained. The contribution of this paper is then the application of this framework for the design of systems expressed as the interconnection of subsystems. In our previous work, we focus on the design of the subsystems in order to ensure a certain level of performance for the (overall) system [14], [15]. In this paper, we focus on the systematic "retuning" of the interconnection in order to improve the system performance. A related problem was considered in the paper [16] with a strong emphasis on the performance analysis. Nevertheless, in contrast with our approach, authors give only some recommendations for the interconnection retuning.

A. Structure of the paper

The paper is organized as follows: some important definitions used in the paper are introduced in Section II. Section III introduces the problem of the interconnection design. In Section IV the main result is presented in terms of sufficient stability and performance conditions for the interconnected system. The result is discussed in Section V. A numerical example is investigated Section VI in order to validate the method. Finally, the conclusion paves the way for further researches.

B. Notations

The identity matrix of $\mathbb{R}^{n\times n}$ is denoted $\mathbf{I}_n$ and the zero matrix of $\mathbb{R}^{n\times m}$ is denoted $\mathbf{0}_{n\times m}$. The subscripts are omitted when obvious from context. For $\mathbf{M}=\mathbf{M}^T$, $\mathbf{M}>0$ denotes $\mathbf{M}$ positive definite [17]. $\mathbf{A}^T$ and $\mathbf{A}^*$ are referred to transpose

M. Zarudniev and P. Villard are with CEA-TECH, MINATEC Campus, 38054 Grenoble, France; mykhailo.zarudniev@cea.fr

G. Scorletti and A. Korniienko are with the Laboratoire Ampère, Ecole Centrale de Lyon, Université de Lyon, 69130 Ecully, France

and transpose conjugate of $\mathbf{A}$ respectively. The symbol "$\otimes$" denotes the Kronecker product [18], "$\star$" the Redheffer star product [12], [19]. Given matrices $\mathbf{X}$ and $\mathbf{M}$ of compatible dimensions, $[*]^{\mathbf{T}}\mathbf{XM}$ denotes $\mathbf{M}^{\mathbf{T}}\mathbf{XM}$ and $(*)^{\mathbf{T}}+\mathbf{X}$, $\mathbf{X}^{\mathbf{T}}+\mathbf{X}$. The matrix $\begin{bmatrix} \mathbf{M_{11}} & \mathbf{M_{12}} \\ \star & \mathbf{M_{22}} \end{bmatrix}$ denotes $\begin{bmatrix} \mathbf{M_{11}} & \mathbf{M_{12}} \\ \mathbf{M_{12}^T} & \mathbf{M_{22}} \end{bmatrix}$.

II. DEFINITIONS

An important concept used in this paper is the dissipativity [14].

***Definition** 1 (Dissipativity):* A causal operator $\mathbf{H}$ with input $\mathbf{q}$ and output $\mathbf{p}$ is *strictly* $\{\mathbf{X},\mathbf{Y},\mathbf{Z}\}-$*dissipative*, if there exist $\varepsilon>0$ and real matrices $\mathbf{X}=\mathbf{X}^T\leq 0$, $\mathbf{Y}$, $\mathbf{Z}=\mathbf{Z}^T\geq 0$ such that $\begin{bmatrix} \mathbf{X} & \mathbf{Y} \\ \mathbf{Y}^T & \mathbf{Z} \end{bmatrix}$ is a full rank matrix and for all $\tau>0$ with $\mathbf{p}=\mathbf{H}(\mathbf{q})$:

$$\begin{aligned} &\int_0^\tau \begin{bmatrix} \mathbf{q}(t) \\ \mathbf{p}(t) \end{bmatrix}^T \begin{bmatrix} \mathbf{X} & \mathbf{Y} \\ \mathbf{Y}^T & \mathbf{Z} \end{bmatrix} \begin{bmatrix} \mathbf{q}(t) \\ \mathbf{p}(t) \end{bmatrix} dt \\ &\leq -\varepsilon \int_0^\tau \begin{bmatrix} \mathbf{q}(t) \\ \mathbf{p}(t) \end{bmatrix}^T \begin{bmatrix} \mathbf{q}(t) \\ \mathbf{p}(t) \end{bmatrix} dt. \end{aligned} \tag{1}$$

If the inequality (1) is satisfied with $\varepsilon=0$, the operator is then called $\{\mathbf{X},\mathbf{Y},\mathbf{Z}\}-$ *dissipative.*

***Definition** 2:* The H_∞ norm of a stable LTI system $\mathbf{T}$ is defined as $\|\mathbf{T}\|_\infty = \sup\limits_{\omega\in\mathbb{R}^+} \overline{\sigma}(\mathbf{T}(j\omega))$.

III. PROBLEM STATEMENT

A block diagram of constant gains and identical LTI systems is first defined as an LFT model. The retuning problem is then presented.

A. Subsystem interconnection model

A system $\tilde{\mathbf{T}}_{\mathbf{w}\to\mathbf{z}}$ defined by a block diagram of constant gains (the interconnection) and identical LTI systems T_s (the subsystems) can be expressed as an LFT model [14], [15] :

1) the subsystems:

$$\mathbf{p}=(\mathbf{I_n}\otimes\mathbf{T_s})\mathbf{q}, \tag{2}$$

where $\mathbf{T_s}(s)$ is one subsystem modeled as a $d\times d$-block transfer function;

2) the interconnection:

$$\begin{bmatrix} \mathbf{q} \\ \mathbf{z} \end{bmatrix} = \left[\begin{array}{c|c} \mathbf{A} & \mathbf{B_w} \\ \hline \mathbf{C_z} & \mathbf{D_{zw}} \end{array}\right] \begin{bmatrix} \mathbf{p} \\ \mathbf{w} \end{bmatrix}. \tag{3}$$

The signals $\mathbf{w}\in\mathbb{R}^l$ and $\mathbf{z}\in\mathbb{R}^k$ are the system input and output, $\mathbf{q}\in\mathbb{R}^{nd}$ and $\mathbf{p}\in\mathbb{R}^{nd}$ are the internal signals. Using the Redheffer star product, (2) and (3) a more compact formulation is readily obtained:

$$\tilde{\mathbf{T}}_{\mathbf{w}\to\mathbf{z}} = (\mathbf{I_n}\otimes\mathbf{T_s})\star\left[\begin{array}{c|c} \mathbf{A} & \mathbf{B_w} \\ \hline \mathbf{C_z} & \mathbf{D_{zw}} \end{array}\right].$$

The retuning of the interconnection is formulated as find a matrix $\mathbf{K}\in\mathbb{R}^{rd\times md}$ such that the system defined by:

$$\mathbf{T}_{\mathbf{w}\to\mathbf{z}}: \left\{ \begin{array}{rcl} \mathbf{p} & = & (\mathbf{I_n}\otimes\mathbf{T_s})\mathbf{q}, \\ \begin{bmatrix} \mathbf{q} \\ \mathbf{z} \end{bmatrix} & = & \begin{bmatrix} \mathbf{A}+\mathbf{B_u}\mathbf{K}\mathbf{C_y} & \mathbf{B_w} \\ \mathbf{C_z}+\mathbf{D_{zu}}\mathbf{K}\mathbf{C_y} & \mathbf{D_{zw}} \end{bmatrix} \begin{bmatrix} \mathbf{p} \\ \mathbf{w} \end{bmatrix}, \end{array} \right. \tag{4}$$

with $\mathbf{B_u}\in\mathbb{R}^{nd\times rd}$, $\mathbf{C_y}\in\mathbb{R}^{md\times nd}$, $\mathbf{D_{zu}}\in\mathbb{R}^{k\times rd}$ achieves some properties. This problem can be interpreted as a control one where the to-be-controlled plant is defined by:

$$\left\{ \begin{array}{rcl} \mathbf{p} & = & (\mathbf{I_n}\otimes\mathbf{T_s})\mathbf{q}, \\ \begin{bmatrix} \mathbf{q} \\ \mathbf{z} \\ \mathbf{y} \end{bmatrix} & = & \begin{bmatrix} \mathbf{A} & \mathbf{B_w} & \mathbf{B_u} \\ \mathbf{C_z} & \mathbf{D_{zw}} & \mathbf{D_{zu}} \\ \mathbf{C_y} & \mathbf{0} & \mathbf{0} \end{bmatrix} \begin{bmatrix} \mathbf{p} \\ \mathbf{w} \\ \mathbf{u} \end{bmatrix} \end{array} \right. \tag{5}$$

and the static feedback controller is defined by $u=\mathbf{K}\mathbf{y}$.

For a more detailed view of the general block diagram see Fig. 1.

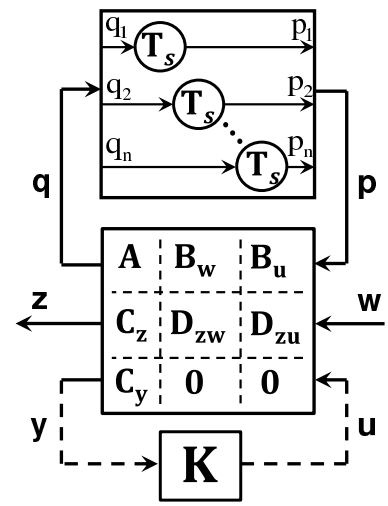

Fig. 1. General block diagram of the subsystem interconnection.

When $\mathbf{T_s}(s)=\frac{1}{s}$, (2) and (3) define a state space representation. In this case, for general matrices $\mathbf{B_u}$ and $\mathbf{C_y}$, compute the matrix $\mathbf{K}$ such that (4) achieves a basic property such as stability is known to be NP-hard [20]: there is no "efficient" general algorithm for this case [21]. Nevertheless, for two cases of matrices $\mathbf{B_u}$ and $\mathbf{C_y}$, the computation of $\mathbf{K}$ can be efficiently solved: (i) the state feedback case ($\mathbf{C_y}=\mathbf{I}$) [22], (ii) the output injection case ($\mathbf{B_u}=\mathbf{I}$) [23].

B. Interconnection Matrix Design Problems

In this paper, we investigate how the state feedback case and the output injection case can be extended to the system (4) where $\mathbf{T_s}$ is assumed to be $\{\mathbf{X},\mathbf{Y},\mathbf{Z}\}-$*dissipative*. Note that an integrator is actually $\{\mathbf{0},-\mathbf{I},\mathbf{0}\}-$*dissipative*. We define two problems.

***Problem** 1 (Internal signal feedback):* Given an LTI system $\mathbf{T}_{\mathbf{w}\to\mathbf{z}}$ with $\mathbf{C_y}=\mathbf{I}$ and $\mathbf{T_s}(s)$ that are $\{\mathbf{X},\mathbf{Y},\mathbf{Z}\}$-dissipative, given $\gamma>0$, find $\mathbf{K}$ such that:

1) the system $\mathbf{T}_{\mathbf{w}\to\mathbf{z}}$ defined by (4) is stable;
2) $\|\mathbf{T}_{\mathbf{w}\to\mathbf{z}}\|_\infty<\gamma$.

***Problem** 2 (Output injection):* Given an LTI system $\mathbf{T}_{\mathbf{w}\to\mathbf{z}}$ with $\mathbf{B_u}=\mathbf{I},\mathbf{D_{zu}}=\mathbf{0}$ and $\mathbf{T_s}(s)$ that are $\{\mathbf{X},\mathbf{Y},\mathbf{Z}\}$-dissipative, given $\gamma>0$, find $\mathbf{K}$ such that:

1) the system $\mathbf{T}_{\mathbf{w}\to\mathbf{z}}$ defined by (4) is stable;
2) $\|\mathbf{T}_{\mathbf{w}\to\mathbf{z}}\|_\infty<\gamma$.

IV. MAIN RESULTS

This section presents a solution to ***Problem*** 1 (Internal signal feedback) and ***Problem*** 2 (Output injection). Both results are based on the following Lemma.

Lemma *1:* Given $\gamma > 0$, the system:

$$(\mathbf{I_n} \otimes \mathbf{T_s}) \star \left[\begin{array}{c|c} \tilde{\mathbf{A}} & \tilde{\mathbf{B}} \\ \hline \tilde{\mathbf{C}} & \tilde{\mathbf{D}} \end{array}\right],$$

with $\{\mathbf{X}, \mathbf{Y}, \mathbf{Z}\}-$*dissipative*, is stable with an H_∞ norm less than γ if there exists a $\mathbf{P} = \mathbf{P}^T > 0 \in \mathbb{R}^{n \times n}$ such that:

$$[*]^{\mathbf{T}} \begin{bmatrix} \mathbf{P} \otimes \mathbf{X} & \mathbf{0} & \mathbf{P} \otimes \mathbf{Y} & \mathbf{0} \\ \star & -\frac{1}{\gamma}\mathbf{I} & \mathbf{0} & \mathbf{0} \\ \star & \star & \mathbf{P} \otimes \mathbf{Z} & \mathbf{0} \\ \star & \star & \star & \gamma \mathbf{I} \end{bmatrix} \begin{bmatrix} \tilde{\mathbf{A}} & \tilde{\mathbf{B}} \\ \tilde{\mathbf{C}} & \tilde{\mathbf{D}} \\ \mathbf{I} & \mathbf{0} \\ \mathbf{0} & \mathbf{I} \end{bmatrix} > 0. \quad (6)$$

Proof: In [15, proof of Theorem 1], it is proved that if $\mathbf{T_s}$ is $\{\mathbf{X}, \mathbf{Y}, \mathbf{Z}\}-$*dissipative* then $(\mathbf{I_n} \otimes \mathbf{T_s})$ is $\{\mathbf{P} \otimes \mathbf{X}, \mathbf{P} \otimes \mathbf{Y}, \mathbf{P} \otimes \mathbf{Z}\}-$*dissipative*. Furthermore, note that the H_∞ norm of a system is strictly less than γ if and only if the system is strictly $\{-\gamma^2\mathbf{I}, \mathbf{0}, \mathbf{I}\}-$*dissipative* which is straightforwardly equivalent to strictly $\{-\gamma\mathbf{I}, \mathbf{0}, \gamma^{-1}\mathbf{I}\}-$*dissipative*. Afterwards, by applying [13, Lemma 3.2], the inequality (6) is obtained. Note that [13, Lemma 3.2] is proved using the separation of graph theorem [22], [24], [25] combined with the so-called S-procedure [26]. ■

Remark 1: In the case of an LTI system modelled by a state space representation, that is $T_s(s) = \frac{1}{s}$, Lemma 1 corresponds to the well-known bounded-real lemma [27].

A. Internal signal feedback

By applying Lemma 1, a solution for ***Problem*** 1 is presented in the following Theorem.

Theorem *1:* Given $\gamma > 0$ and the LTI system $\mathbf{T_{w \to z}}$ with $\mathbf{C_y} = \mathbf{I}$ and $\mathbf{T_s}(s)$ that are $\{\mathbf{X}, \mathbf{Y}, \mathbf{Z}\}$-dissipative with $\mathbf{X} < \mathbf{0}$, given $\gamma > 0$, there exists $\mathbf{K}$ such that:

1) the system $\mathbf{T_{w \to z}}$ defined by (4) is stable;
2) $\|\mathbf{T_{w \to z}}\|_\infty < \gamma$

if there exist $\mathbf{G} \in \mathbb{R}^{rd \times nd}$ and $\mathbf{Q} = \mathbf{Q}^T > 0 \in \mathbb{R}^{n \times n}$ such that:

$$\left[\begin{array}{c|c|c|c} \mathbf{M_{11}} & \mathbf{M_{12}} & \mathbf{0} & \mathbf{M_{14}} \\ \hline \star & \mathbf{M_{22}} & \mathbf{M_{23}} & \mathbf{M_{24}} \\ \hline \star & \star & \mathbf{M_{33}} & \mathbf{M_{34}} \\ \hline \star & \star & \star & \mathbf{M_{44}} \end{array}\right] > \mathbf{0}, \quad (7)$$

with:

$$\begin{aligned}
\mathbf{M_{11}} &= -(\mathbf{Q} \otimes \mathbf{I})(\mathbf{I} \otimes \mathbf{X}), \\
\mathbf{M_{12}} &= (\mathbf{A}(\mathbf{Q} \otimes \mathbf{I}) + \mathbf{B_u}\mathbf{G})(\mathbf{I} \otimes \mathbf{X}), \\
\mathbf{M_{14}} &= (\mathbf{I} \otimes \mathbf{X})\mathbf{B_w}, \\
\mathbf{M_{22}} &= (*)^{\mathbf{T}} + (\mathbf{A}(\mathbf{Q} \otimes \mathbf{I}) + \mathbf{B_u}\mathbf{G})^{\mathbf{T}}(\mathbf{I} \otimes \mathbf{Y}) \\
&\quad (\mathbf{Q} \otimes \mathbf{Z}), \\
\mathbf{M_{23}} &= (\mathbf{C_z}(\mathbf{Q} \otimes \mathbf{I}) + \mathbf{D_u}\mathbf{G})^{\mathbf{T}}, \\
\mathbf{M_{24}} &= \left(\mathbf{I} \otimes \mathbf{Y}^T\right)\mathbf{B_w}, \\
\mathbf{M_{33}} &= \mathbf{M_{44}} = \gamma\mathbf{I}, \\
\mathbf{M_{34}} &= \mathbf{D_w}.
\end{aligned}$$

Furthermore, $\mathbf{K} = \mathbf{G}(\mathbf{Q^{-1}} \otimes \mathbf{I})$.

Proof: By applying Lemma 1 to the system defined by (4) with $\mathbf{C_y} = \mathbf{I}$, we obtain: there exists $\mathbf{P} = \mathbf{P^T} > \mathbf{0}$ such that (6) is verified.

By applying twice the Schur complement lemma, see e.g. [27, page 7] to (6) is equivalent to:

$$\left[\begin{array}{c|c|c|c} -\mathbf{P^{-1}} \otimes \mathbf{X^{-1}} & \mathbf{0} & \mathbf{A} + \mathbf{B_u}\mathbf{K} & \mathbf{B_w} \\ \hline \star & \gamma\mathbf{I} & \mathbf{C} + \mathbf{D_u}\mathbf{K} & \mathbf{D_w} \\ \hline \star & \star & \begin{array}{c} \mathbf{P} \otimes \mathbf{Z} \\ +(*)^{\mathbf{T}} + (\mathbf{P} \otimes \mathbf{Y^T})(\mathbf{A} + \mathbf{B_u}\mathbf{K}) \end{array} & (\mathbf{P} \otimes \mathbf{Y^T})\mathbf{B_w} \\ \hline \star & \star & \star & \gamma\mathbf{I} \end{array}\right] > 0$$

By post-multiplying and pre-multiplying the latter inequality by the matrix:

$$\mathbf{T} = \begin{bmatrix} \mathbf{I} \otimes \mathbf{X} & \mathbf{0} & \mathbf{0} & \mathbf{0} \\ \mathbf{0} & \mathbf{0} & \mathbf{P^{-1}} \otimes \mathbf{I} & \mathbf{0} \\ \mathbf{0} & \mathbf{I} & \mathbf{0} & \mathbf{0} \\ \mathbf{0} & \mathbf{0} & \mathbf{0} & \mathbf{I} \end{bmatrix}$$

and by its transpose and by performing the change of variables with $\mathbf{Q} = \mathbf{P^{-1}}$ and $\mathbf{G} = \mathbf{K}(\mathbf{Q} \otimes \mathbf{I}) \iff \mathbf{K} = \mathbf{G}(\mathbf{Q^{-1}} \otimes \mathbf{I})$, inequality (7) is obtained, which completes the proof. ■

Remark 2: Find $\mathbf{Q} > 0$, $\mathbf{G}$ such that (7) is satisfied is a LMI optimization problem [27]. Find the smallest γ such that there exist $\mathbf{Q} > 0$, $\mathbf{G}$ such that (7) is satisfied is another standard LMI optimization problem which can be solved efficiently. ***Theorem*** 1 then presents an efficient solution to the ***Problem*** 1 in the form of a sufficient condition.

Remark 3: When $\mathbf{X} = \mathbf{0}$, a theorem similar to ***Theorem*** 1 is readily obtained with (7) replaced by:

$$\left[\begin{array}{c|c|c} \mathbf{M_{22}} & \mathbf{M_{23}} & \mathbf{M_{24}} \\ \hline \star & \mathbf{M_{33}} & \mathbf{M_{34}} \\ \hline \star & \star & \mathbf{M_{44}} \end{array}\right] > \mathbf{0}.$$

In the case when $\mathbf{T_s}(\mathbf{s}) = \frac{1}{s}$, this theorem reduces to the well-known solution of the H_∞ control using state feedback, see e.g. [27, Page 109].

B. Output injection

A similar solution can be proposed to ***Problem*** 2.

Theorem *2:* Given $\gamma > 0$ and the LTI system $\mathbf{T_{w\to z}}$ with $\mathbf{B_u} = \mathbf{I}$ and $\mathbf{T_s}(s)$ that are $\{\mathbf{X},\mathbf{Y},\mathbf{Z}\}$-dissipative with $\mathbf{X} < 0$, given $\gamma > 0$, there exists $\mathbf{K}$ such that:

1) the system $\mathbf{T_{w\to z}}$ defined by (4) is stable;
2) $\|\mathbf{T_{w\to z}}\|_\infty < \gamma$

if there exist $\mathbf{G} \in \mathbb{R}^{rd\times nd}$ and $\mathbf{P} = \mathbf{P}^T > 0 \in \mathbb{R}^{n\times n}$ such that (7) is satisfied with:

$$\begin{aligned}
\mathbf{M_{11}} &= -(\mathbf{P}\otimes\mathbf{X}),\\
\mathbf{M_{12}} &= (\mathbf{I}\otimes\mathbf{X})\left((\mathbf{P}\otimes\mathbf{I})\mathbf{A}+\mathbf{G}\mathbf{C_y}\right),\\
\mathbf{M_{14}} &= (\mathbf{P}\otimes\mathbf{X})\mathbf{B_w},\\
\mathbf{M_{22}} &= (\mathbf{P}\otimes\mathbf{Z})+\\
&\quad (*)^{\mathbf{T}}+(\mathbf{I}\otimes\mathbf{Y^T})\left((\mathbf{P}\otimes\mathbf{I})\mathbf{A}+\mathbf{G}\mathbf{C_y}\right),\\
\mathbf{M_{23}} &= \mathbf{C_z^T},\\
\mathbf{M_{24}} &= (\mathbf{P}\otimes\mathbf{Y^T})\mathbf{B_w},\\
\mathbf{M_{33}} &= \mathbf{M_{44}} = \gamma\mathbf{I},\\
\mathbf{M_{34}} &= \mathbf{D_w}.
\end{aligned}$$

Furthermore, $\mathbf{K} = (\mathbf{P}\otimes\mathbf{I})^{-1}\mathbf{G}$.

Proof: The proof of ***Theorem*** 2 is obtained by a modification of the proof of ***Theorem*** 1. ■

Remark 4: As in the case of ***Theorem*** 1, the conditions of ***Theorem*** 2 can be applied using convex optimization involving LMI constraints.

V. DISCUSSION

In the first subsection, we explain the benefits of the proposed approach with respect to an approach based on the state space representation. In the second subsection, we discuss the introduction of weighting functions for the evaluation of the performance.

A. Benefits of the proposed approach with respect to the state space one.

An alternative approach for finding a solution to Problem 1 is to recast it as a control problem for a system modeled by a state space representation. To this purpose, we first express $\mathbf{T_{w\to z}}$ as a state space model, that is an LFT representation with $\frac{1}{s}$. Let $\mathbf{A_s}$, $\mathbf{B_s}$, $\mathbf{C_s}$, $\mathbf{D_s}$ be the matrices of a minimal state space representation of $\mathbf{T_s}$, that is [12]:

$$\mathbf{T_s}(s) \quad = \quad \mathbf{I}_{n_s}\frac{1}{s}\star\left[\begin{array}{c|c}\mathbf{A_s} & \mathbf{B_s}\\ \hline \mathbf{C_s} & \mathbf{D_s}\end{array}\right],$$

where n_s is number of state variables. For the sake of simplicity and without any loss of generality, we assume in the sequel that $\mathbf{D_s} = \mathbf{0}$. Then $\mathbf{T_{w\to z}}$ defined by (4) has the following state space representation:

$$\frac{1}{s}\mathbf{I}_{nn_s}\star\left[\begin{array}{c|c}\overline{\mathbf{A}}+\overline{\mathbf{B}}\mathbf{K}\overline{\mathbf{C}} & \overline{\mathbf{B}}\\ \hline \overline{\mathbf{C}}+\overline{\mathbf{D}}\mathbf{K}\overline{\mathbf{C}} & \overline{\mathbf{D}}\end{array}\right] \tag{8}$$

with $\overline{\mathbf{A}} = \mathbf{I}_n\otimes\mathbf{A_s}+(\mathbf{I}_n\otimes\mathbf{B_s})\,\mathbf{A}\,(\mathbf{I}_n\otimes\mathbf{C_s})$, $\overline{\mathbf{B}} = (\mathbf{I}_n\otimes\mathbf{B_s})\,\mathbf{B_u}$, $\overline{\mathbf{C}} = \mathbf{C_y}\,(\mathbf{I}_n\otimes\mathbf{C_s})$.

In the Problem 1, we have $\mathbf{C_y} = \mathbf{I}_n$. The size of $\overline{\mathbf{C}}$ is $nd\times nn_s$. Except if $d = 1$ and $n_s = 1$, the computation of the matrix $\mathbf{K}$ such that the system defined by the state space representation (8) is stable can not be solved efficiently [20], see e.g. [28] for the formulation of this problem as a non convex optimization problem. *The first benefit of our approach is then to propose a convex approach to Problem 1.*

The second benefit is that the number of decision variables is dramatically reduced. With the (non convex) approach of [28], instead of the decision variable $\mathbf{Q}$ of dimension $\frac{n(n+1)}{2}$ in our approach, a decision variable of dimension $\frac{nn_s(nn_s+1)}{2}$ is introduced, which is much larger. Another nice point is that the number of decision variables does not depend on the order of $\mathbf{T_s}$, but only on the number of repetitions of $\mathbf{T_s}$. This point is important with respect to the dimension of the typical engineering problems. The same benefits are attributable to the output injection approach. Nevertheless, in contrast to the state-space approach, our approach could introduce some conservatism since the conditions are only sufficient.

B. Performance evaluation using a weighted H_∞ norm constraint.

From a practical point of view, the performance can not be evaluated as a constraint on the H_∞ norm of the system ($\|\mathbf{T_{w\to z}}\|_\infty < \gamma$) but as a constraint on the *weighted* H_∞ norm of the system $\|\mathbf{W}_o\mathbf{T_{w\to z}}\mathbf{W}_i\|_\infty < \gamma$ [7]. For the sake of discussion, let us assume that we have a single weighting function, that is, $\mathbf{W}_o = \mathbf{W}$ and $\mathbf{W}_i = \mathbf{I}$. In order to apply ***Theorem*** 1 to ***Problem*** 1 (or ***Theorem*** 2 to ***Problem*** 2), $\mathbf{T_{w\to z}}$ is replaced by $\mathbf{W}\mathbf{T_{w\to z}}$. The first consequence is that the weighting function $\mathbf{W}$ has to be expressed as a linear fractional transform of h subsystems $\mathbf{T_s}(s)$, that is, there exist matrices $\mathbf{A_w}$, $\mathbf{B_w}$ $\mathbf{C_w}$ and $\mathbf{D_w}$ such that

$$\mathbf{W} \quad = \quad (\mathbf{I_h}\otimes\mathbf{T_s}(\mathbf{s}))\star\left[\begin{array}{c|c}\mathbf{A_w} & \mathbf{B_w}\\ \hline \mathbf{C_w} & \mathbf{D_w}\end{array}\right].$$

For some simple cases, $\mathbf{W}$ can be easily found in the form of an LFT representation. For more complex cases, an extension of filter design methods were proposed for the choice of $\mathbf{W}$, see [29].

The second consequence is that the use of the weighting function introduces in the retuned system h extra subsystems $\mathbf{T_s}$, in addition to retune the gains.

VI. APPLICATION

Let us evaluate the interest of our approach on the example of the interconnection of subsystems introduced in [14] and [15]. Each subsystem is the feedback connection of an oscillator with a (local) dynamical controller, referred to as PLL in Electronics, see e.g. [30]. For the sake of illustration, we focus on a similar interconnection of $n = 9$ PPLs. Fig. 2a presents the initial Cartesian interconnection (with a circular form). The subsystem is defined by:

$$T_s(s) = \frac{b_1 s + b_0}{s^2 + a_1 s + a_0},$$

where $b_0 = 6.923 \times 10^6$, $b_1 = 3.8 \times 10^4$, $a_0 = 6.923 \times 10^6$, $a_1 = 3.8 \times 10^4$. This transfer function verifies the $\{x,y,z\}$-dissipativity condition with $x = -0.01$, $y = -1.5$, $z = 3$.

The objective is to achieve the phase synchronization of 9 PLLs with a ramp reference input ($l = 1$) with a certain time response, using a predefined Cartesian (network) interconnection.

The initial interconnection is defined by: m_i which denotes the number of PLL inputs and

$$\begin{aligned} \mathbf{A} &= [a_{ij}], \text{ with } a_{ij} = \begin{cases} 1/m_i, \text{ if connected;} \\ 0, \text{ otherwise,} \end{cases} \\ \mathbf{B_w} &= \begin{bmatrix} 1/3 & 0 & 0 & 0 & 0 & 0 & 0 & 0 & 0 \end{bmatrix}^T, \end{aligned}$$

The retuning possibility is defined by:

$$\begin{aligned} \mathbf{C_y} &= \mathbf{I}, \\ \mathbf{B_u} &= \begin{bmatrix} 0 & 0 & 0 & 0 & 1 & 0 & 0 & 0 & 0 \end{bmatrix}^T, \end{aligned}$$

where $\mathbf{C_y}$ implies the use of the internal signal feedback and $\mathbf{B_u}$ implies the use of single (5th) PLL for retuning. If the use of single PLL is not sufficient, the design should involve an increased number of PLLs.

The time response of the initial PLL reference tracking is approximately $t_r \approx 0.01$ seconds. Our aim is to modify the existing interconnection in order to improve the reference tracking.

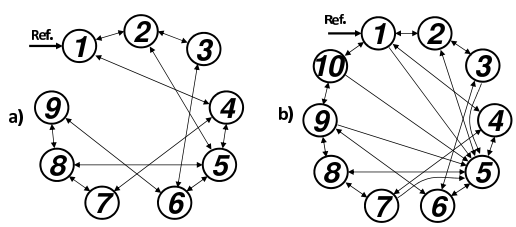

Fig. 2. a) Initial Network. b) Improved Network. The signal "Ref." is the network reference.

The output composition matrices and performance matrices are defined by:

$$\mathbf{C_z} = \begin{bmatrix} -1/n & -1/n & -1/n & \cdots & -1/n \\ -1 & 1 & 0 & \cdots & 0 \\ -1 & 0 & 1 & \cdots & 0 \\ \vdots & \vdots & \vdots & \ddots & \vdots \\ -1 & 0 & 0 & \cdots & 1 \end{bmatrix}, \quad (9)$$

$$\begin{aligned} \mathbf{D_{zu}} &= \mathbf{0_{9\times 1}}, \\ \mathbf{D_{zw}} &= \begin{bmatrix} 1 & 0 & 0 & 0 & 0 & 0 & 0 & 0 & 0 \end{bmatrix}^T, \end{aligned}$$

The first output z_1 is the mean of the tracking error of all nine PPLs, z_k for $k \in \{2, \cdots, 9\}$ is the difference between the output of the first PLL and the output of the kth PLL.

The global dynamics is enforced by introducing a frequency dependent weighting function on the first output z_1 which enforces a frequency dependent constraint on the magnitude of the frequency response between the reference input and z_1 close to the continuous black line on Fig. 3. The

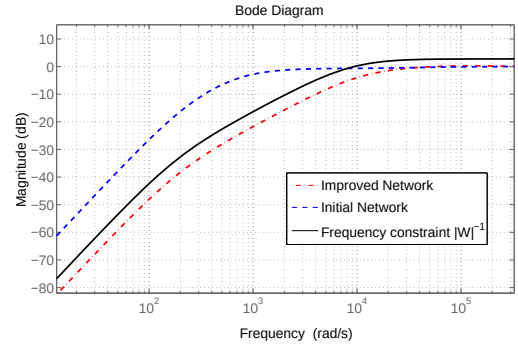

Fig. 3. Reference tracking performance and frequency constraint W_1^{-1}.

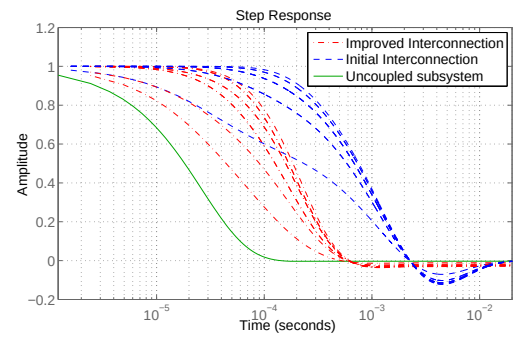

Fig. 4. Reference tracking by the uncoupled subsystem T_s (green continuous line), the improved network (red dash-dotted line), the initial network (blue dashed line).

time response of the synchronization is actually enforced by the cutoff frequency $\omega \approx 9 \times 10^4$ rad/sec which corresponds approximately to 7×10^{-4} second, see Fig. 3.

$$W_1(T_s(s)) = d_1 + c_1 T_s(s)(1 - a_1 T_s(s))^{-1} b_1,$$

with $a_1 = 1$, $b_1 = 0.5$, $c_1 = -0.331$, $d_1 = -0.7266$. In addition to the cutoff frequency, the parameters of the weighting function W_1 are chosen in order to ensure a slope $+40\ dB/dec$ in the low frequency range in order to track ramp reference [15]. The weighting functions on the output z_k for $k \in \{2, \cdots, 9\}$ are chosen as the same contant value $W_2 = 0.1$. Therefore, the network output performance is constrained by:

$$\mathbf{W} = \begin{bmatrix} W_1 & \underbrace{W_2 \quad \cdots \quad W_2}_{k-1} \end{bmatrix}^T.$$

Note that the number h of the additional subsystems T_s introduced by the weighting function choice is equal to 1. Putting in series the constraints $\mathbf{W}$ and the initial system $\mathbf{T_{w\to z}}$, one obtains $\mathbf{WT_{w\to z}}$ that corresponds to the augmented system with $h + n = 10$ subsystems. The static feedback gain $\mathbf{K}$ is computed by applying ***Theorem*** 1 using the Robust Control toolbox of Matlab.

$$\mathbf{K} = \left[56.9|166.4|-31.4|-22.6|-31.4|-145.2|-43.4|-22.6|-43.4|-25.1\right].$$

The design obtained (see Fig. 3) using the ***Theorem*** 1 allows to respect the tracking specification ($\gamma = 0.91$) by the improved network ($t_r < 7 \times 10^{-4}$ seconds). A new network has been obtained (see Fig. 2b). One can observe the reference tracking synchronization improvement on the Fig. 4.

The final performance can be improved even more if one chooses the matrices $\mathbf{B_u} = \mathbf{I}$ and $\mathbf{C_y} = \mathbf{I}$ as full block. In that case, the static feedback controller will correspond to the centralized controller and the obtained reference tracking performance for each subsystem will be more homogeneous.

VII. CONCLUSIONS

New efficient interconnection matrix design methods are introduced in the framework of the LFT modeling and the input-output approach. The proposed methods are a generalization of the well known state feedback and output injection to the interconnection of identical subsystems. Their efficiency is illustrated in the design of the PLL network. The use of LFT approach allowed to recast the problem, which is non convex in its classical formulation, into a convex optimization and to dramatically reduce the number of decision variables. The use of weighted H_∞ norm opens a practical perspective to the proposed approach. Authors are convinced that the control design and implementation problems that concern interconnected oscillators, filters or dynamical multi-agent systems can be efficiently solved with the presented methods.

REFERENCES

[1] T. Iwasaki, *A Unified Matrix Inequality Approach to Linear Control Design*. PhD thesis, Purdue University, West Lafayette, IN 47907, Dec. 1993.

[2] G. E. Dullerud and F. Paganini, *A Course in Robust Control Theory*. Springer, 2000.

[3] S. Petrausch and R. Rabenstein, "Interconnection of state space structures and wave digital filters," *Circuits and Systems II: Express Briefs, IEEE Transactions on*, vol. 52, no. 2, pp. 90–93, 2005.

[4] D. Frey, "Exponential state space filters: a generic current mode-design strategy," *Circuits and Systems I: Fundamental Theory and Applications, IEEE Transactions on*, vol. 43, no. 1, pp. 34–42, 1996.

[5] S. Skogestad and I. Postlethwaite, *Multivariable Feedback Control, Analysis and Design.* John Wiley and Sons Chischester, 2005.

[6] A. Korniienko, E. Colinet, G. Scorletti, E. Blanco, D. Galayko, and J. Juillard, "A clock network of distributed adplls using an asymmetric comparison strategy," in *Proceedings of 2010 IEEE International Symposium on Circuits and Systems (ISCAS)*, pp. 3212–3215, May-Jun. 2010.

[7] G. Zames, "Feedback and optimal sensitivity: Model reference transformations, multiplicative seminorms, and approximate inverses," *IEEE Trans. Aut. Control*, vol. AC-26, pp. 301–320, Apr. 1981.

[8] S. Chevallier, A. Jan Ijspeert, D. Ryczko, F. Nagy, and J.-M. Cabelguen, "Organisation of the spinal central pattern generators for locomotion in the salamander: Biology and modelling," *Brain Research Reviews*, vol. 57, pp. 147–161, Jan. 2008.

[9] Y. Kuramoto and I. Nishikawa, "Statistical Macrodynamics of Large Dynamical Systems. Case of a Phase Transition in Oscillator Communities," *Journal of Statistical Physics*, vol. 49, no. 3/4, 1987.

[10] V. Gutnik and A. Chandrakasan, "Active GHz clock network using distributed PLLs," *Solid-State Circuits, IEEE Journal of*, vol. 35, pp. 1553 –1560, Nov. 2000.

[11] A. J. Ijspeert, "Central pattern generators for locomotion control in animals and robots: A review," *Neural Networks*, vol. 21, pp. 642–653, May 2008.

[12] K. Zhou, J. Doyle, and K. Glover, *Robust and Optimal Control*. Prentice Hall, New Jersey, 1995.

[13] G. Scorletti and L. E. Ghaoui, "Improved LMI conditions for gain scheduling and related problems," *Int. J. Robust and Nonlinear Control*, vol. 8, pp. 845–877, Aug. 1998.

[14] A. Korniienko, G. Scorletti, E. Colinet, E. Blanco, J. Juillard, and D. Galayko, "Control law synthesis for distributed multi-agent systems: Application to active clock distribution networks," in *Proceedings of the American Control Conference*, pp. 4691–4696, 2011.

[15] A. Korniienko, G. Scorletti, E. Colinet, and E. Blanco, "Control Law Design for Distributed Multi-Agent Systems," tech. rep., 2011. Ampère, École Centrale de Lyon and Laboratoire d'Electronique et des Technologies de l'Information - LETI, CEA, url: http://hal.archives-ouvertes.fr/hal-00630543/PDF/Rapport_technique_KSCB11.pdf.

[16] S. Tonetti and R. Murray, "Limits on the network sensitivity function for homogeneous multi-agent systems on a graph," in *American Control Conference (ACC)*, pp. 3217 –3222, Jul. 2010.

[17] R. A. Horn and C. A. Johnson, *Matrix Analysis*. Cambridge University Press, 1985.

[18] J. Brewer, "Kronecker products and matrix calculus in system theory," *IEEE Transactions on Circuits and Systems*, vol. CAS-25, no. 9, pp. 772–780, 1978.

[19] R. Redheffer, "The riccati equation: Initial values and inequalities," *Mathematische Annalen*, vol. 133, no. 3, pp. 235–250, 1957.

[20] V. Blondel and J. Tsitsiklis, "NP-hardness of some linear control design problems," *SIAM Journal on Control and Optimization*, vol. 35, no. 6, pp. 2118–2127, 1997.

[21] V. Syrmos, C. Abdallah, P. Dorato, and K. Grigoriadis, "Static output feedback - a survey," *Automatica*, vol. 33, no. 2, pp. 125–137, 1997.

[22] M. G. Safonov and M. Athans, "Robustness and computation aspects of nonlinear stochastic estimators and regulators," *IEEE Trans. Aut. Control*, vol. AC-23, pp. 717–725, Aug. 1978.

[23] D. G. Luenberger, "Observing the state of a linear system," *IEEE Transactions on Military Electronics*, vol. 8, pp. 74 –80, Apr. 1964.

[24] P. J. Moylan and D. J. Hill, "Stability criteria for large-scale systems," *IEEE Trans. Aut. Control*, vol. AC-23, pp. 143–149, 1978.

[25] K. Goh and M. Safonov, "Robust analysis, sectors and quadratic functionals," in *Proc. IEEE Conf. on Decision and Control* (IEEE, ed.), (New Orleans, Louisiana), 1995.

[26] V. A. Yakubovich, "Minimization of quadratic functionals under quadratic constraints and the necessity of a frequency condition in the quadratic criterion for absolute stability of nonlinear control systems," *Soviet Math. Dokl.*, vol. 14, no. 2, pp. 593–597, 1973.

[27] S. Boyd, L. El Ghaoui, E. Feron, and V. Balakrishnan, *Linear Matrix Inequalities in System and Control Theory*. Studies in Applied Mathematics, Philadelphia, PA: SIAM, June 1994.

[28] L. El Ghaoui, F. Oustry, and M. Aitrami, "A cone complementarity linearization algorithm for static output-feedback and related problems," *IEEE Trans. Aut. Control*, vol. 42, pp. 1171–1176, Aug. 1997.

[29] M. Zarudniev, *Synthèse de fréquence par couplage d'oscillateurs spintroniques*. PhD thesis, Ecole Centrale de Lyon, Jan. 2013. (In french).

[30] J. Encinas, *Phase Locked Loops*. Springer, Apr. 1993.