HAL
open science

Evolving Small-Cell Communications towards Mobile-over-FTTx Networks

Jian A. Zhang, Iain B. Collings, Chung Shue Chen, Roullet Laurent, Lin Luo, Ho Siu-Wai, Jinhong Yuan

To cite this version:

Jian A. Zhang, Iain B. Collings, Chung Shue Chen, Roullet Laurent, Lin Luo, et al.. Evolving Small-Cell Communications towards Mobile-over-FTTx Networks. IEEE Communications Magazine, 2013, page 1-21. hal-00865330

HAL Id: hal-00865330

https://hal.science/hal-00865330v1

Submitted on 24 Sep 2013

HAL is a multi-disciplinary open access archive for the deposit and dissemination of scientific research documents, whether they are published or not. The documents may come from teaching and research institutions in France or abroad, or from public or private research centers.

L'archive ouverte pluridisciplinaire **HAL**, est destinée au dépôt et à la diffusion de documents scientifiques de niveau recherche, publiés ou non, émanant des établissements d'enseignement et de recherche français ou étrangers, des laboratoires publics ou privés.

Evolving Small-Cell Communications towards Mobile-over-FTTx Networks

Jian A. Zhang[1], Iain B. Collings[1], Chung Shue Chen[2], Laurent Roullet[2], Lin Luo[3], Siu-Wai Ho[3] and Jinhong Yuan[4]

[1]Computational Informatics Division, CSIRO, Australia, {Andrew.Zhang; Iain.Collings}@csiro.au
[2]Alcatel-Lucent Bell Labs, Villarceaux, France, {CS.Chen; Laurent.Roullet}@alcatel-lucent.com
[3]ITR, University of South Australia, Adelaide, Australia,{Lin.Luo; Siuwai.Ho}@unisa.edu.au
[4]University of New South Wales, Sydney, Australia, J.Yuan@unsw.edu.au

Abstract— Small cell techniques are recognized as the best way to deliver high capacity for broadband cellular communications. Femtocell and distributed antenna systems (DAS) are important components in the overall small cell story, but are not the complete solution. They have major disadvantages of very limited cooperation capability and expensive deployment cost, respectively. In this article, we propose a novel mobile-over-FTTx (MoF) network architecture, where a fiber-to-the-x (FTTx) network is enhanced as an integrated rather than a simple backhauling component of a new mobile network delivering low-cost and powerful small cell solutions. In part, the MoF architecture combines the advantages of femtocell and DAS, while overcoming their disadvantages. Implementation challenges and potential solutions are discussed. Simulation results are presented and demonstrate the strong potential of the MoF in boosting the capacity of mobile networks.

INTRODUCTION

Small cell techniques can remarkably improve frequency reuse factor and have been recognized as the best way to deliver high capacity in cellular communications. Reducing cell size implies increasing the number of cells, which typically leads to significant increase on hardware, operation, maintenance and installation costs. Currently, two innovative systems, femtocell [1] and distributed antenna system (DAS, also known as remote radio head, RRH) [2], have been developed and deployed, and enable cellular systems to efficiently reduce cell size.

Femtocells are small, low-power base-stations (BSs) that are generally consumer-deployed and connected to their own wired backhaul connection [1]. Today, millions of femtocell units have been installed and have been shown to significantly improve indoor coverage. The limitation of current femtocell technology is obvious: cooperation between femtocell is slow and costly, where cooperation means nodes collaborate and exchange

information with each other to achieve efficient cell association, interference and handover management, or even form distributed multiple-input multiple output (MIMO) systems to significantly increase capacity. The introduction of home eNodeB (HeNB) and HeNB gateway functions in the latest LTE releases can potentially improve femtocells' cooperation. However, femtocells may use different backhauls and be connected to different gateways. Instant communication between different femtocells, femtocells and macro BSs is very costly and the information exchange delay is very large. Hence using cooperative femtocell is not well motivated. As a competitive technology to femtocell, WiFi offload confronts an even harder cooperation problem because WiFi was designed as a standalone device. When multiple WiFi systems are densely deployed to meet increasing capacity requirement, lack of cooperation between them can cause severe mutual interference and decrease the overall capacity. In addition, it is very challenging for WiFi to support mobile users. In emerging WiFi solutions, artificial central coordinators have been added to the network to solve these problems, which, however, is only effective in small areas. The overhead and complexity for building a large-scale cooperative WiFi network are prohibitive.

DAS is deployed by cellular operators. In DAS, the radio frequency (RF) components and antennas are located far away from BSs, and connected to the BSs typically by fibers using the radio over fiber (RoF) technique. One BS can have multiple such extended RRHs, and the signal processing is done centrally in the BS. A single large macrocell is equivalently divided to multiple smaller picocells, which can cooperate efficiently under centralized processing, and the network capacity can be increased significantly. However, this requires dedicated deployment of the optical network and RRHs, and the cost significantly increases with the density of RRHs.

In this article, we introduce an overarching architecture for novel dense small-cell mobile networks based on the fiber-to-the-x (FTTx) networks, which we name as *Mobile-over-FTTx (MoF)* networks. FTTx, such as FTTP (premises) and FTTB (building) networks are being deployed world-wide, for example, the national broadband network in Australia, Ethernet passive optical networks (EPON) in Asia, and gigabit-capable PON (GPON) in North America. The FTTx network is an ideal infrastructure for building dense small-cell mobile networks without requiring significant extra hardware investment.

The MoF architecture we propose is a design where FTTx networks are enhanced to provide very high speed wireless connections to mobile devices through low cost remote access units (RAUs) installed in homes by users, and powerful mobile processing units (MPUs) installed in the optical office. In the proposed MoF architecture, MPUs host most of the cellular network functions such as eNB, HeNB gateway and mobility management entity

(MME), and RAUs have limited baseband processing capability and provide open access to all mobile users. Importantly, MoF does not simply use an FTTx network as a backhaul (as is the case for femtocells and WiFi offload). Instead, as will be discussed, it exploits the signal transmission property of FTTx networks to optimize the interface between RAUs and MPUs. The interface is digital baseband, and baseband processing modules are distributed between RAUs and MPUs. Signal transmission between RAUs and MPUs shares the FTTx network with other wired services. An integrated scheduler does bandwidth allocation for both wireless and wired traffic. Such an integrated MoF architecture allows powerful cooperative processing and efficient use of the FTTx bandwidth, resulting in efficient small cell solutions.

The MoF architecture combines the advantages of femtocell and DAS systems while overcoming their disadvantages. Similar to DAS, MoF enables efficient cooperation between RAUs thanks to centralized processing and a flat network structure. However, MoF resolves DAS's high cost problem by sharing the FTTx infrastructure and allowing user-deployed RAUs, which are the keys to a low-cost and dense small cell solution, and make MoF fundamentally different to the RRH scenario. At the same time, MoF retains the low cost merit of femtocell while solving its cooperation problem.

MoF is aligned with future cloud based radio access network (C-RAN) architecture [3] by sharing the centralized-processing architecture with C-RAN. The development of C-RAN has been focusing on the split of baseband processing functions between dedicated accelerators (dedicated processors and chips) and powerful general purpose processors (GPPs), based on transmitting analog RF RoF signal over dedicated fibre networks. MoF differentiates itself from C-RAN because 1) it uses FTTx networks shared between wired and wireless traffic rather than dedicated fibre networks; and 2) RAUs in MoF can be deployed randomly by users, and can be detached and attached at any time, while RRHs in C-RAN is deliberately deployed by operators at potentially pre-optimized places. As to be detailed in the next section, many new features of the proposed MoF architecture have been dedicatedly optimized for sharing the FTTx networks and supporting random and dense RAUs. Nevertheless, there is an important commonality of centralized processing with both MoF and C-RAN. This enables MoF to potentially provide a more flexible and lower cost physical infrastructure for C-RAN; or on the other hand, the core C-RAN principle of accelerator-GPP split optimized for the centralized processing model can be efficiently applied to MoF.

In this article, we consider the long term evolution (LTE) (release 10) cellular system, and time-division PON FTTx networks (since FTTx networks are typically based on PON today). In a PON, optical line terminals (OLT) are located in optical central offices, and each OLT is connected to a passive optical distribution unit (ODU),

which splits the optical link to up to 128 homes. An optical network unit (ONU) is used in each home, connecting to the ODU typically via multimode fiber. In the downlink, OLT broadcasts information to all connected ONUs and each ONU picks up its data via a logical channel identity (ID); in the uplink, time division multiplexing access (TDMA) is used to support the access of multiple ONUs. For more information on PON, the readers are referred to [4].

In the rest of this article, we present the proposed MoF architecture, discuss implementation challenges and potential solutions, and provide simulation results to demonstrate the great capacity that MoF can provide.

MOBILE OVER FTTX ARCHITECTURE

Fig. 1 shows an example of the physical deployment of the proposed MoF architecture along a street, where a PON is deployed, and a LTE network is serving the street. The MoF network consists of MPUs co-locating with OLTs in the optical central office, RAUs co-locating with ONUs in homes, and the PON links. The MPUs are the central processing devices for RAUs, which provide direct access to user equipments (UEs, mobiles). We mainly consider the case when RAUs are randomly installed by users, although they may also be deployed by a network operator at desired locations. The attachment or detachment of one RAU is not controllable by the network operator, and can happen anytime and anywhere.

(Fig. 1 here)

In the uplink, RAUs collect signals from UEs and generate RoF signals, which, together with wired traffic, are sent to the optical central office over PON links. Optical RoF signals are converted to electrical digital signals in OLTs, and passed to MPUs for processing. In the downlink, signal is transmitted and processed in the reverse order. An integrated scheduler in MPU/OLT optimizes bandwidth allocation for both wired and RoF traffic.

The MPUs group neighboring RAUs to form virtual cells to provide high-speed access to UEs using distributed MIMO techniques. Such grouping can be done efficiently as MPUs have direct control over RAUs. Each virtual cell implements the logical functionality of an eNB. UEs occupying the same frequency/time resource in a virtual cell can be separated by using spatial division multiplexing access (SDMA) techniques [5]. In principle, every UE in the picocell is able to use the whole mobile spectrum when the number of RAUs is more than UEs being serviced, assuming accurate synchronization between RAUs and perfect channel estimation and feedback. In reality, synchronization and channel estimation in MoF are very challenging problems as to be detailed later.

We propose a flat network structure for MoF as shown in Fig. 2, where its integration with LTE systems is also shown. Each RAU includes an optical-electrical two-way converter and a radio transceiver which only completes partial baseband processing. The other baseband processing modules are shifted to MPUs. Most of the network protocols are also implemented in MPUs. Hence RAUs are more of access units rather than fully functional eNBs, and they are only visible to MPUs but not to other network components. Therefore the interface between RAU and MPUs does not add another layer and complicate the network structure. MPUs are the entities hosting eNBs and HeNB gateway functions. Since MPUs are centrally located and control numerous RAUs covering a large area, they are also excellent hosts for MME and S-GW. MPUs are connected to existing cellular e-NBs and MME/S-GW using fiber optical links for information exchange and cooperation. Having a large number of eNBs on one site and co-located MME/S-GW can make network management more efficient, for example, better handover management as to be discussed in next section.

(Fig. 2 here)

MoF is dedicated to and optimized as a small cell solution. It has three major features, which are dedicatedly optimized for sharing the PON networks and supporting random and dense RAUs. They also distinguish MoF from a simple combination of femtocell and DAS, and from existing fiber-wireless (FiWi) access networks [6]. These features are highlighted below and elaborated after the list.

- Digital baseband RoF signal, instead of analog RoF signal, is transmitted over PON in MoF. That is, analog radio signal is down-converted to or up-converted from digital baseband form in RAUs.
- The baseband processing modules are distributed between RAUs and MPUs. Partial of the modules are located in the RAUs to mainly compress the wireless signal to enable efficient share of the PON link between wired and RoF traffic. The rest modules are implemented in MPUs to maximize the capability of centralized processing and reduce hardware and maintenance cost.
- MoF supports dynamic virtual cells by centrally coordinating and grouping RAUs and applying self-organized network (SON) [7] techniques. The SON techniques provide self configuration, recovering and optimization capability to the MoF networks to support user-deployed RAUs. Both the coverage area and the number of RAUs in one virtual cell can vary quickly to adapt to communication requirements.

Transmission of Digital RoF Signal over PON

Both analog and digital RoF signals can be transmitted over fiber. Choice of the transmission schemes for MoF depends on many factors, such as spectrum availability and efficiency, transmission loss, hardware complexity, maintenance requirement, and flexibility for future expansion.

Analog RoF signal, where analog radio signal is directly shifted to an optical wavelength and transmitted over fiber, is widely used in DAS and the FiWi networks. The main advantage of using analog RoF is its low hardware and maintenance cost. However, three main disadvantages of analog RoF make it less attractive for MoF, compared with digital RoF. Firstly, analog RoF is more prone to transmission distortions. Secondly, it needs to occupy a physical channel corresponding to a certain wavelength, and different physical channels are required by different RAUs connected to a single OLT. This will cause complex hardware design in RAUs and is very inconvenient for manipulating cell and network variations. Lastly, large guard bands are needed in PON between adjacent physical RoF channels, and RoF and digital wired channels, which leads to low spectrum efficiency. New multi-access schemes such as subcarrier multiplexing, wavelength division multiplexing and OFDMA have been proposed for aggregating wired and analog RoF signals in PON-based FiWi networks [8]. However, challenging problems e.g., optical beat interference caused by the analog nature of the analog RoF signal, add significant complexity into the system design. Schemes balancing efficiency and complexity are yet to be developed.

In contrast, transmission of digital RoF signals over PON is much easier and more efficient, although the RAU cost may increase moderately. Digital RoF signal can be treated similarly to other wired signals. Logical PON channels can be assigned to each RAU by its connected OLT. Different RAUs are assigned with different channel IDs to separate their signals. In the downlink, one OLT continuously broadcasts signals to the entire RAUs connecting to it, and each RAU only picks up signals having its logical channel ID or a common ID. In the uplink, TDMA is used and RAUs are assigned time slots for transmission. Integrated PON and MoF Schedulers in MPUs/OLTs can conveniently allocate bandwidth to RAUs and other wired units in ONUs, meeting different quality-of-service (QoS) requirements.

Table 1 compares digital and three RoF transmission schemes. Considering all the factors in Table 1, we select digital baseband RoF signal as the mostly suitable transmission scheme for the MoF networks. However, different to femtocell, each RAU is not a fully functional base station. Instead, it only completes part of the PHY-layer function as to be detailed next.

(Table 1 here)

Distribution of Baseband Processing Modules Between RAUs and MPUs

In MoF, baseband processing modules are distributed between MPUs and RAUs. Comparatively, femtocell is a fully-functional base station, and RRH generally only has RF components. This design is mainly based on the following considerations.

1. **Complete baseband processing in RAUs degrades centralized processing capability.** SDMA detection performance can be optimized when both data signals and channels from all RAUs in a virtual cell are available [9]. Exchange of such information between RAUs is costly. In the case of fast varying channels, there is insufficient time for feedback of de-multiplexing vectors to RAUs for SDMA detection. Hence, RoF signals from UEs are best to be jointly processed in the central MPUs, which naturally have all the information for optimal detection.

2. **Partial baseband processing capabilities in RAUs can reduce RoF traffic over PON.** RoF and wired signals need to coexist in each PON link in MoF, and the speed of UEs is constrained by the available PON throughput to RAUs. In addition, the signal transmission approach in PON allows multiple RAUs to share one logical channel in both the uplink and downlink. Introducing pre-processing capabilities to RAUs, together with exploring such shared signal transmission property of the PON, can efficiently reduce the bandwidth requirement of the RoF signal.

3. **Reduce hardware and maintenance cost.** MPUs can share processing capabilities and hardware components. Concentrating some baseband processing functions in MPUs also enable easier system update and maintenance.

A natural strategy for splitting baseband processing modules between RAUs and MPUs is to treat RAUs as relaying nodes and allocate processing modules based on novel cooperative relaying techniques adapt to the shared nature of PON links. To achieve a good balance between performance, processing delay and complexity, the SDMA decoding, the majority of physical layer convergence procedure sub-layer and upper layers can be retained in MPUs, and the rest of the baseband processing is shifted to RAUs. Based on this configuration, we propose to formulate the MoF as a multi-access, multi-relaying model by regarding RAUs as the relaying nodes between MPUs and UEs. State-of-the-art physical layer network coding (PNC) techniques such as compute-and-forward [10] can then be applied. The block diagram of such a scheme is demonstrated in Fig. 3. With proper PNC schemes, bandwidth requirement for RoF signal can be largely reduced by compressing the RoF signal. For

example, directly quantizing a complex baseband sample typically requires more than 12 bits, while only 6 bits per symbol is needed for 64QAM modulated symbols by using the compute-and-forward technique [10]. RoF traffic can thus be reduced by more than half. Signals from different RAUs can even be transmitted in the same PON logical channel in the uplink, generating a linearly combined PNC signal.

(Fig. 3 here)

Dynamic Virtual Cell Structures

Dynamic virtual cell is a key concept in MoF networks. Each virtual cell is logically an eNB. The topology of the virtual cells can be configured dynamically to optimize real-time system throughput and efficiently support mobile UEs. Both the coverage area and the number of RAUs in one virtual cell can be changed adaptively to the number and locations of UEs. The size of virtual cells is critical for the performance. Larger cells provide better support to mobile UEs, but generally lead to higher spatial processing complexity. The radiation power of RAUs can also be adjusted to vary the coverage area of a virtual cell.

RAUs are typically grouped via their locations, with the aid of the channel state information they see from UEs. Each virtual cell only contains RAUs connected to the same OLT for easy synchronization and scheduling. Multiple virtual cells can be formed by RAUs connected to one OLT. For simplicity, one virtual cell is one multiple-antenna system, where each RAU acts as one distributed antenna. One RAU can simultaneously be in several virtual cells such that overlapped cells are formed. Larger and overlapped cells are very useful for handover management. Larger virtual cell can reduce the frequency of handover at the cost of increased processing complexity in MPUs. Common RAUs in multiple neighboring cells are registered in the database of the MPUs. To establish the database, MPUs can initially form a very large virtual cell, monitor the SNR of all the RAUs in the virtual cell, and implement, for example, correlation analysis to establish the SNR map and determine common handover RAUs. RAUs can be easily removed from one virtual cell by not assigning logical PON channels to them.

Dynamics of the virtual cell, as well as the whole MoF network, is also caused by the ad-hoc nature of the network. The dynamics can arise from random attachment/detachment of RAUs at anytime and anywhere by a user, dynamic switch-on/off of RAUs initiated by MPUs, and dynamic selection of MPU modules. Such a dynamic and random network calls for efficient SON techniques, which enable automatic network update with little manual intervention. MoF's centralized processing model facilitates the implementation of SON techniques

in both RAUs and MPUs. Central MPUs provide efficient coordination and can largely improve the SON efficiency. SON function modules specific to MoF are briefly described as follows.

- *Self Configuration* for automatic detection and installation of an added RAU. Newly deployed RAUs are configured by automatic installation procedures with plug-and-play capability and conduct automatic tuning with fine granularity.
- *Self Healing and Recovery* for automatic removal of a RAU after device failure or RAU removal.
- *Self Optimization* for carrier load balancing, capacity and resource optimization in the event of network dynamics. Associated processing includes virtual cell regrouping, power adjustment, and neighbor relation table update.

Fig. 4 illustrates an example of applying SON technique in the event of RAU dynamics. As shown in the figure, the order of processing is different for the cases when add/removal of a RAU is initiated by a user or MPU. The former is a random event and poses more challenging on network design. In either case, MPU shall have the automatic detection function to determine whether a RAU has stopped working and then conduct corresponding self optimization.

IMPLEMENTATION CHALLENGES

Although some techniques applied in MoF, such as virtual MIMO, have been extensively studied, new challenges arise from the new MoF architecture, constraints of underlying PON networks, integration with cellular systems, and randomness and denseness of the networks. In this section, we review some key challenges and discuss how we can overcome them.

Baseband Signal Processing

Some of the challenging problems in baseband signal processing in MoF are common to SDMA-MIMO systems, such as timing alignment and antenna calibration, power imbalance, channel rank estimation and channel feedback [11]. Synchronization and channel estimation are two particularly challenging tasks in MoF. Splitting baseband processing modules between RAUs and MPUs reduces the difficulty in synchronization and channel estimation.

There are two synchronization challenges in MoF. One is to minimize the delay and timing difference between signals from different RAUs during PON transmission, the other is to align the transmission time of RAUs. High QoS can be allocated to RoF signals to reduce their propagation delays on PON. Mitigation of the propagation difference is particularly challenging in the uplink where TDMA causes propagation differences

equal to at least one timeslot. In this situation, it is better to have delay-sensitive processing implemented in the RAUs. Synchronizing RAUs' transmission benefits from the small radius of virtual cells and the use of guard interval in OFDM LTE systems. Small cell radius leads to insignificant propagation time difference between multiple RAUs and one UE. Guard interval can also further absorb such difference.

Channel estimation and tracking is equally challenging in MoF networks due to the small cell size. For a moving UE, channels can change significantly during a short period because the distance of travel is comparable to that between the UE and a RAU. Such rapid channel variation demands fast approaches in generating and updating SDMA precoding and decoding vectors. Channel tracking techniques, which exploit the channel statistical property, can be integrated into the process of generating these vectors. Detailed mobile channel characterization for such dense networks is needed. Alternatively, channel estimation can be relaxed by serving high-speed UEs with traditional eNBs covering larger areas, at the cost of reduced data rate.

Another interesting research problem in MoF is high-dimension array signal processing with special geographical pattern. The MoF MIMO setup can exhibit special properties due to the special geometric distribution of the transceivers, e.g., similar to a linear array for a street, a rectangular array for a multi-storey building, or a 3-D array for a street in the downtown of a city. This setup represents a practical scenario where the massive MIMO technology [13] can be applied. However, in the MoF setup, the channel spatial correlation can be much smaller, and the distributed nature of antennas and transceivers will introduce more implementation loss due to the difficulties in achieving accurate synchronization and channel estimation. These new features require an extension of the massive MIMO technology in both capacity theorem and practical implementations, such as pilot contamination, simple linear receiver structure and precoder designs.

Scheduling for Wired and RoF Traffic

The tasks of scheduling in MoF are allocating bandwidth to both wired and RoF traffic according to their QoS requirement, and quickly responding to variability of these traffic classes.

PON and LTE use similar poll/request/grant mechanism for bandwidth allocation, which makes it possible to use an integrated scheduler for both wired and RoF traffic. An integrated scheduler simplifies the network structure and saves the implementation cost. In PON, bandwidth allocation is completed between an OLT and its connected ONUs and updated at every round of the bandwidth granting cycle. Each ONU then distributes the granted bandwidth, in the form of logical channels, to different service modules inclusive of the RAU. In LTE systems, this is completed between BS and UEs. Bandwidth allocation is connection-based, and bandwidth is granted to each UE.

Integration of the schedulers faces at least two challenges: QoS supporting and quick responding to bandwidth variation. Like LTE, PON supports services with different QoS levels. However, the number of priority levels and their definitions are different between the two systems. In addition, PON supports QoS in a differentiated service mode, while LTE essentially follows an integrated service mode. Hence, an efficient mapping and conversion scheme is needed. Bandwidth variation arises from the fact that the scheduling cycles of PON and LTE are different. The RAUs, as well as their supported UEs, may not be able to receive their desired bandwidth in time. This problem can be solved by introducing new scheduling algorithms based on, for example, bandwidth predication and reservation techniques [9].

Scheduling of the RoF traffic can be based on both the available bandwidth for RoF signal and the optimized virtual cell structure. It is interesting to note that the RoF traffic only affects the total throughput available to the wired traffic in one OLT, rather than to a particular ONU, when an integrated scheduler is used. Therefore, active RAUs in one virtual cell can be determined by considering only the throughput, performance, and total required bandwidth, while without explicitly considering their number and locations. This can largely simplify the scheduling algorithm.

Handover Management

There are three types of handovers, i.e., handover between MoF and external BSs, between different MoF networks, and between eNBs within one MoF network. The first two types of handovers are standard and can be processed similarly as in current cellular systems. The third type faces new challenges arising from the denseness characteristics of the MoF networks [14]. Apart from forming large and overlapped virtual cells and associating fast-moving UEs with macrocells as mentioned before, splitting the *Control* and *User* planes of the radio link is also a viable solution for supporting mobility and scalability in such dense small cells [15].

Handover in MoF can be implemented more efficiently thanks to centralized processing, compared to that in current small cell systems. Centralized processing enables fast information exchange for handover management. The central MPUs host and process most handover and interference parameters such as duty cycle, time to trigger and cell individual offsets as defined in 3GPP Release 10. This can remarkably reduce the signaling load for collecting measurement statistics and distributing the optimization results. Local exchange of information among MPUs can also be conveniently implemented via local X2 interfaces during optimization search or handover execution. If MME is also local, the load is even more relieved. To accelerate such information exchange, the physical structure of MPUs should be optimized such that a cluster of MPUs have direct connections to each other and each MPU can process multiple eNB functionalities.

Handover in MoF can be optimized through virtual cell restructuring and PON throughput adaptation. Rather than changing a moving UE to another virtual cell, the associated virtual cell can be restructured by adding new RAUs or removing existing ones to support the UE. Such processing demands new user-specific virtual cell models, where each UE maintains its own mobile-varying virtual cell record. The handover can also be made to adapt to the available PON throughput or minimize the demand for PON throughput. Since RAUs connected to one OLT share the PON capacity, handover between virtual cells consisting of these RAUs makes little difference on backhauling requirement. Hence MPUs should handover UEs to virtual cells supported by other OLTs, if the traffic in the current PON link is to be reduced. Such handover decision needs joint optimization between scheduling and backhauling.

NUMERICAL EXAMPLES OF THE MOF CAPACITY

In Figure 5, we show some simulation results for the achievable throughput in a MoF network, where 16 RAUs are equally spaced at 40 meters at each side of a 40-meter wide street. Using a two-dimension axis system, the locations of these RAUs can be represented as $(40i, 40j)$, Where $i = 0, 1, \ldots, 15$, and $j = 0, 1$. We assume that these RAUs equally share 50% capacity of a PON link, which can be 1 or 10 Gbps [4]. In the downlink, RAUs can fully use the 50% capacity, while in the uplink with TDMA, a guard interval of 8 μs is used between any two RAU transmissions. We use a LTE path loss model, pathloss in dB=37+30*$\log_{10}$(distance in meter), plus a small-scale independent Rayleigh fading model to simulate the channels. SDMA techniques are considered for connecting UEs.

In the first scenario, we study how the throughput changes when more RAUs are used to support the connection of 4 UEs locating at (0, 20), (40, 20), (80, 20) and (120, 20). The average throughput per UE provided by 4 to 32 RAUs to these 4 UEs is shown in Figure 5(a). We can see that the throughput consistently increases with the number of RAUs thanks to the spatial diversity gain. The PON capacity shapes the UE throughput until it reaches the wireless capacity. Further increasing the number of RAUs achieves little improvement on the throughput. It implies that the optimal number of RAUs activated for the processing should be determined closely with the wireless capacity.

In the second scenario, we study how the average throughput per UE changes with the number of UEs increasing when 32 RAUs are supporting these UEs. The x-axis locations of these UEs are generated following a uniform distribution between 0 and 1240, and the y-axis is fixed as 20. The results are shown in Figure 5(b). We can see that the average throughput under the PON constraint decreases much more quickly with increasing UEs

than the wireless capacity. It implies that PON constraint has significant impact on the throughput. Results in this example show that MoF can largely improve the data rate of UEs and the guard interval in the uplink of PON introduces negligible throughput degradation. It can also be seen that more RAUs do not necessarily lead to higher UE data rate. The number of RAUs in one virtual cell should be determined by carefully considering the PON throughput constraint and the wireless capacity.

CONCLUDING REMARKS

We have presented a novel MoF network architecture, where a flat mobile network is established by enhancing the PON FTTx networks with centrally located MPUs in optical offices and user-installed RAUs in homes. Distinctive designs in the architecture, including digital baseband interfaces, distributed baseband processing modules between RAUs and MPUs, dynamic virtual cell structures and self organized network technologies, are highlighted and justified. We also reviewed main implementation challenges and discussed approaches to solving these challenges. Being a low cost and powerful small cell solution, MoF is very promising for future broadband communications.

Acknowledgements: We would like to thank Alex Grant of ITR, University of South Australia, for his many helpful comments and insightful perusal of the draft. This work is partially supported by the French ANR (National Research Agency) project "Ecoscell" and the European Union Seventh Framework Programme (FP7/2007-2013) Network of Excellence "TREND". Part of Chung Shue Chen's work presented in this paper has been carried out at LINCS (www.lincs.fr).

REFERENCES

1. J. G. Andrews, H. Claussen, M. Dohler, S. Rangan, and M. C. Reed, "Femtocells: Past, present, and future," *IEEE Journal on Selected Areas in Communications*, vol. 30, no. 3, pp. 497-508, Apr. 2012.
2. D. Wake, A. Nkansah, and N. J. Gomes, "Radio over fiber link design for next generation wireless systems", *Journal of Lightwave Technology*, vol. 28, no. 16, Aug. 2010.
3. Y. Lin, L. Shao, Z. Zhu, Q. Wang, and R. K. Sabhikhi, "Wireless network cloud: Architecture and system requirements," *IBM Journal of Research and Development*, vol. 54, no. 1, pp. 4:1-4:12, Jan.-Feb. 2010.

4. F. Effenberger, D. Clearly, O. Haran, G. Kramer, R. D. Li, M. Oron, and T. Pfeiffer, “An introduction to PON technologies,” *IEEE Communications Magazine*, vol. 45, no. 3, pp. S17-S25, Mar. 2007.

5. Chaiman Lim; Taesang Yoo; Clerckx, B.; Byungju Lee; Byonghyo Shim, "Recent trend of multiuser MIMO in LTE-advanced," *Communications Magazine, IEEE* , vol.51, no.3, pp.127,135, March 2013.

6. N. Ghazisaidi, M. Maier, and C. Assi, “Fiber-wireless (FiWi) access networks: A survey,” *IEEE Communications Magazine*, vol. 47, no. 2, pp. 160-167, Feb. 2009.

7. I. Saniee and U. Barth, “Self-organizing and self-optimizing networks,” *Bell Labs Technical Journal*, Special Issue, vol. 15, no. 3, Dec. 2010.

8. Chun-Ting Lin; Chen, J.; Peng-Chun Peng; Cheng-Feng Peng; Wei-Ren Peng; Bi-Shiou Chiou; Sien Chi, "Hybrid Optical Access Network Integrating Fiber-to-the-Home and Radio-Over-Fiber Systems," Photonics Technology Letters, IEEE , vol.19, no.8, pp.610,612, April15, 2007

9. D. Gesbert, S. Hanly, H. Huang, S. Shamai Shitz, O. Simeone, and W. Yu, “Multi-cell MIMO cooperative networks: A new look at interference," *IEEE Journal on Selected Areas in Communications*, vol. 28, no. 9, pp. 1380-1408, Dec. 2010.

10. Nazer, B.; Gastpar, M., "Compute-and-Forward: Harnessing Interference Through Structured Codes," Information Theory, IEEE Transactions on, vol.57, no.10, pp.6463-6486, Oct. 2011

11. 3GPP TR 36.871 V11 Technical report, “Downlink Multiple Input Multiple Output (MIMO) enhancement for LTE-Advanced”, Dec. 2011

12. Mariana P. Dias and Nelson L. S. da Fonseca, “A robust WiMAX scheduler for EPON-WiMAX networks”, in *Proc. IEEE Globecom*, Dec. 2012.

13. F. Rusek, D. Persson, B. K. Lau, E. G. Larsson, T. L. Marzetta, O. Edfors, and F. Tufvesson, “Scaling up MIMO: Opportunities and Challenges with Very Large Arrays”, IEEE Signal Proces. Mag., vol. 30, no. 1, pp. 40-46, Jan. 2013

14. V. M. Nguyen, F. Baccelli, L. Thomas, and C. S. Chen, “Best signal quality in cellular networks: Asymptotic properties and applications to mobility management in small cell networks,” *EURASIP Journal on Wireless Communications and Networking*, 2010.

15. Hiroyuki Ishii, Yoshihisa Kishiyama and Hideaki Takahashi, “A Novel Architecture for LTE-B: C-plane/U-plane Split and Phantom Cell Concept”, International workshop on Emerging Technologies for LTE-Advanced and Beyong-4G, pp624-630, 2012

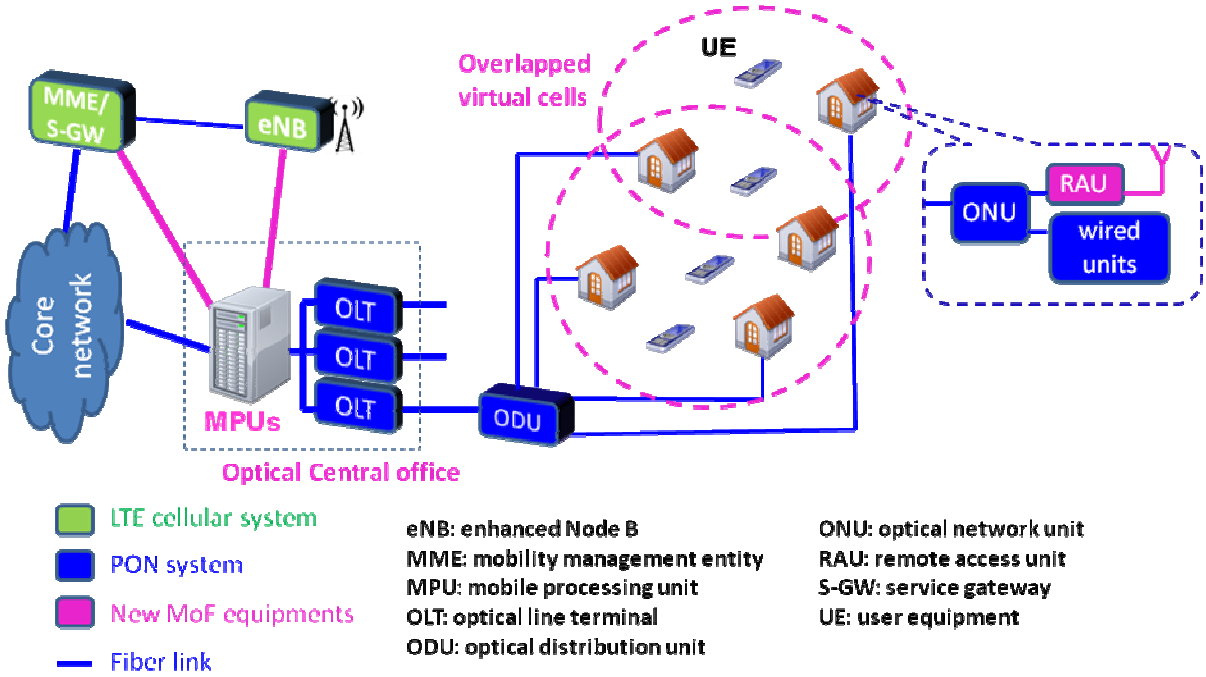

Figure 1: An example of the physical deployment of the proposed MoF architecture along a street

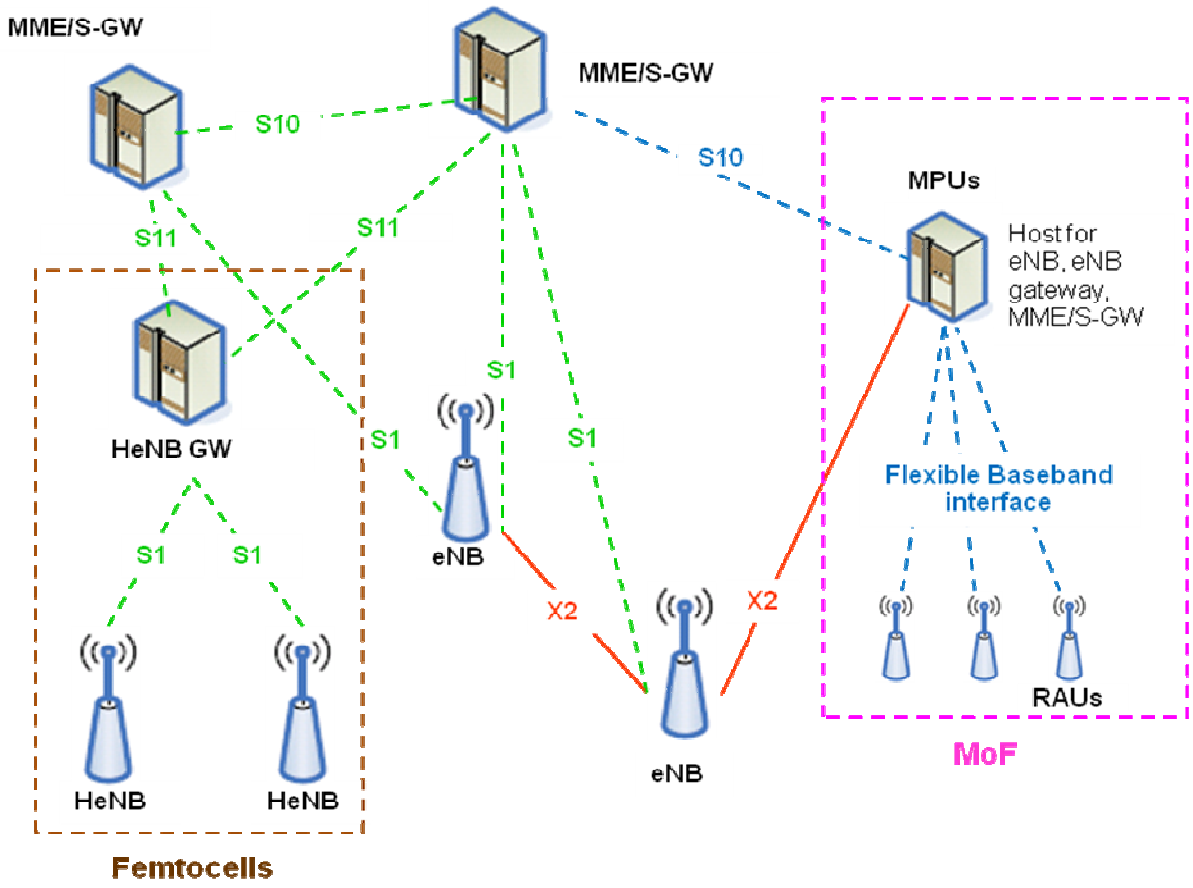

Figure 2: MoF network architecture and its integration with LTE systems

Schemes	Digital RoF signal	Analog RoF signal		
		Baseband	IF	RF
Complexity of RAU	**Highest**. Require RF, Down-conversion, Up-conversion circuits, analog to digital converter (ADC), digital to analog convert (DAC).	Higher. Require RF, Down-conversion and up-conversion circuits.	High. Require RF, IF-RF conversion circuits.	**Lowest**. Require RF only.
SNR Requirement	**Lowest**	Lower	Low	**Highest**
Convenience of Transmission over PON (Coexistence)	**Very convenient**. Use PON logical channels directly.	**No legal band available**; **Inconvenient multiplexing and multiuser access.**		
		Require simple photonic transceiver		**Require advanced photonic transceiver**
Signal processing capability	**Strong**. Enable flexible distributed processing in RAUs.	Weak. Simple processing such as weighting can be applied.		
Capability of supporting multiple air interfaces	Medium. RF and IF sampling techniques can be applied to simplify hardware design.	Weak. Multiple sets of up- and down-conversion circuits needed.		**Strong**. Can process RF signal from a few GHz to mm-wave band directly.

Table 1: Comparison between different schemes for transmitting RoF signal over PON. Text in blue for advantages, and in red for disadvantages.

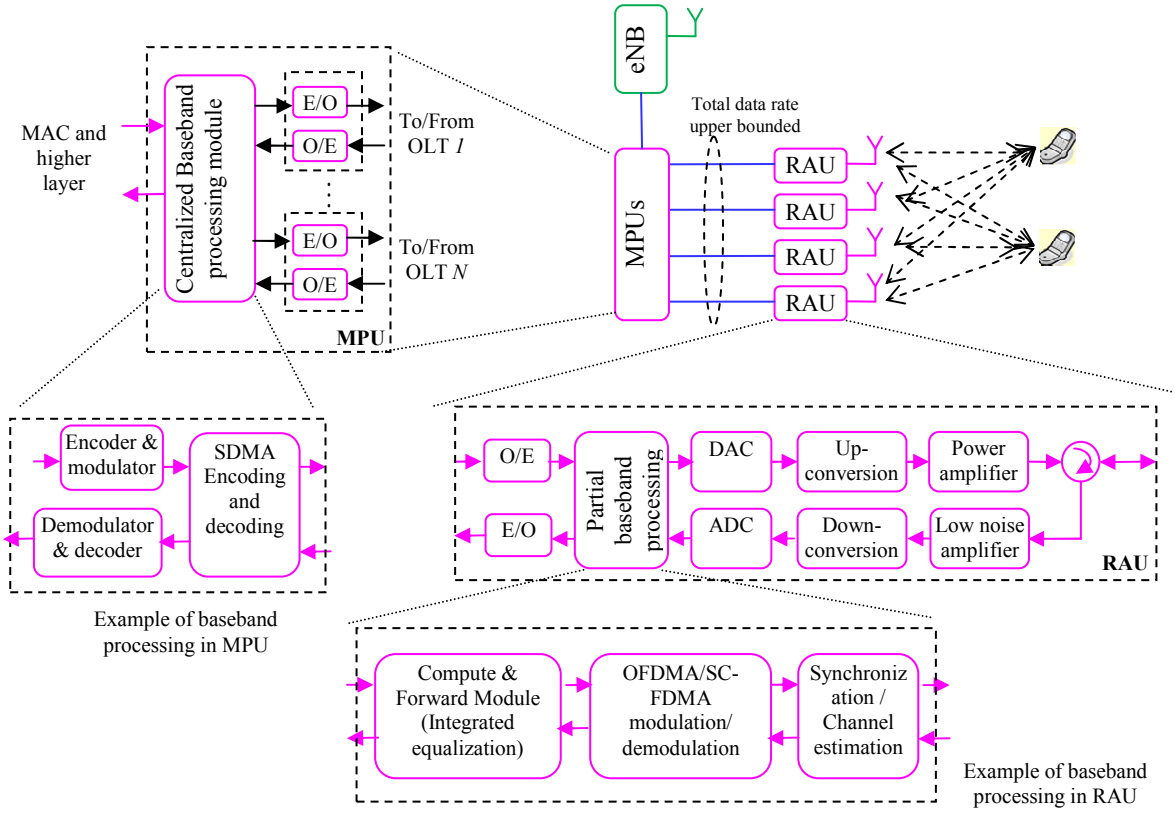

Figure 3: An equivalent MIMO model of the MoF system by viewing RAUs as relaying nodes, and an example of the baseband allocation between RAUs and MPUs based on the compute and forward technique.

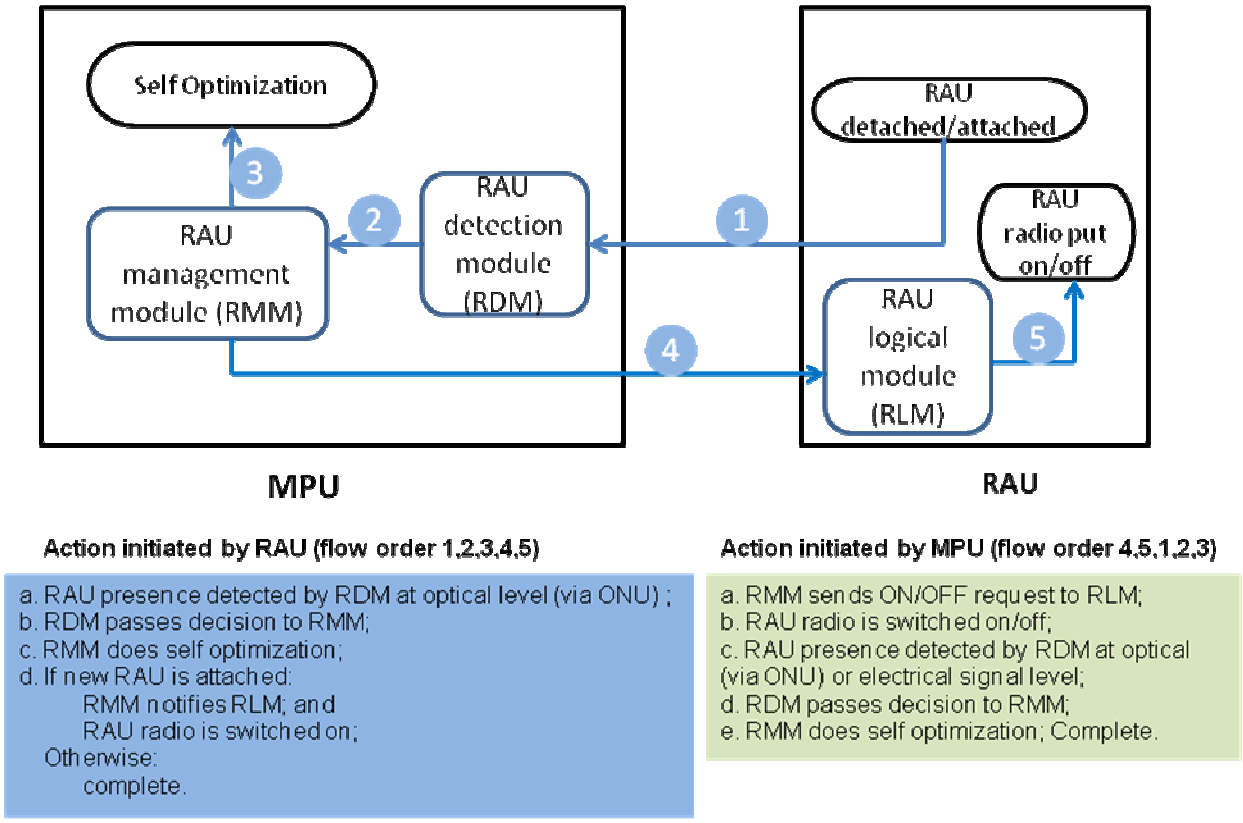

Figure 4: Application of Self-organized network technologies in the events of RAU dynamics in MoF networks.

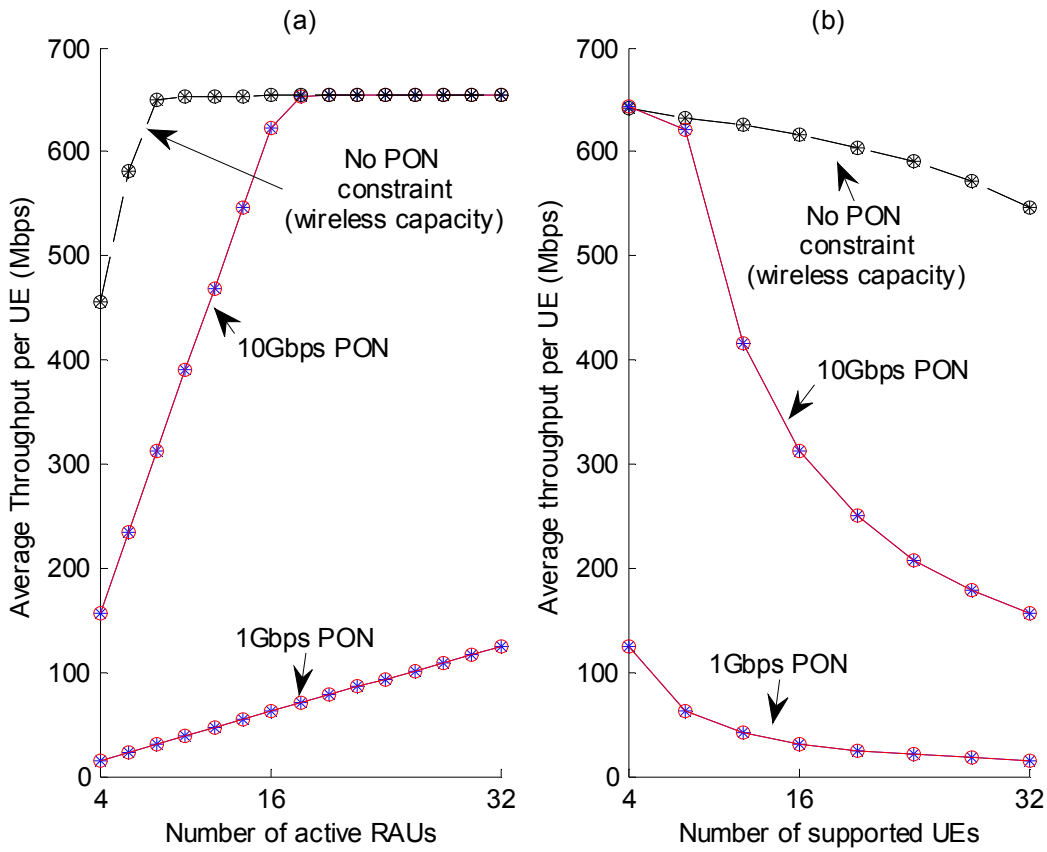

Figure 5: Average throughput per UE achievable in a MoF network. The emission power of each RAU and UE is 10 dBm, and the noise power spectral density in each device is -174 dBm. Each UE and RAU has a single antenna and uses uplink frequency 1960 MHz, downlink frequency 2140 MHz and bandwidth 60 MHz. Curves for uplink and downlink capacity are almost overlapped in both figures. (a) Left: Variation of the average throughput per UE for 4 UEs supported by an increasing number of RAUs. (b) Right: Average throughput per UE for a varying number of UEs supported by 32 RAUs.