HAL
open science

Modelling approach for the Simulation-Based Preliminary Design of Power Transmissions

Jonathan Liscouët, Marc Budinger, Stéphane Orieux, Jean-Charles Maré

To cite this version:

Jonathan Liscouët, Marc Budinger, Stéphane Orieux, Jean-Charles Maré. Modelling approach for the Simulation-Based Preliminary Design of Power Transmissions. Mechanism and Machine Theory, 2011, 46 (3), pp. 276-289. 10.1016/j.mechmachtheory.2010.11.010 . hal-00848090

HAL Id: hal-00848090

https://hal.science/hal-00848090v1

Submitted on 25 Jul 2013

HAL is a multi-disciplinary open access archive for the deposit and dissemination of scientific research documents, whether they are published or not. The documents may come from teaching and research institutions in France or abroad, or from public or private research centers.

L'archive ouverte pluridisciplinaire **HAL**, est destinée au dépôt et à la diffusion de documents scientifiques de niveau recherche, publiés ou non, émanant des établissements d'enseignement et de recherche français ou étrangers, des laboratoires publics ou privés.

Modelling approach for the Simulation-Based Preliminary Design of Power Transmissions

Jonathan Liscouët, Marc Budinger[1], Jean-Charles Maré, Stéphane Orieux

Université de Toulouse; INSA, UPS, Mines Albi, ISAE; ICA (Institut Clément Ader)
135, avenue de Rangueil, F-31077 Toulouse, France

Abstract

The promises of Model Based Design have led to the development of numerous methodologies and software tools, especially for the specific or detailed design stages, from controller design to finite element analysis. However, the Model Based Design of actuation systems lacks methodologies and expressive simulation models that are suited to preliminary design, where key technical decisions are taken considering various design alternatives and few available design details. In order to fill this gap, the present paper illustrates how scaling laws and acausal modelling can be used as a design tool, exploiting inverse simulation capabilities to evaluate technological alternatives quantitatively from limited design detail information. The application of the modelling approach is shown for two major components of mechanical transmission systems: roller bearings and ball and roller screws. The scaling laws presented are validated with manufacturers' data. To conclude, the suitability of the proposed methodology is illustrated with the preliminary sizing of an electromechanical actuator for an aircraft primary flight control surface (aileron).

Keywords: ball-screw, flight control, inverse simulation, model based design, Modelica, modelling, preliminary design, scaling laws.

Notation

CAD	Computer Aided Design
FEM	Finite Element Method
RMS	Root Mean Square
SOA	Safe Operating Area
3D	Three-dimensional

1. Introduction

The current competitive market environment calls for cheaper, safer and more environmentally friendly systems, along with ever shorter times to market and an increasing demand for quality and advanced functionalities. The preliminary design [1] is a critical phase of a project that engages most of the decisions and development costs. The goal of this phase is to define and technologically embody a concept that complies with all the different engineering disciplines and requirements involved. Later on in the development, it may appear that the solutions identified do not cope with the various and numerous requirements. With rapidly advancing computational technology, simulation-based and virtual prototyping design offer great potential for reducing cost and improving design quality by supporting early verification and virtual validation of solutions [2,3]. Therefore, in recent decades, a big research effort has been put into developing software tools dedicated to virtual prototyping early in the development process [2-7]. Nevertheless, there is still a lack of simple and expressive (i.e. adequate level of detail) simulation models suited to the needs of preliminary design, where only a few design parameters are available but major technical decisions are to be taken. This paper introduces an original model-based process that automates the sizing task for power transmission systems like actuators. This process provides the designer with a rapid capability to make top-level decisions. For this purpose, the candidate designs must be compared globally, considering the whole set of criteria: power capability, operation domain, service life, reliability and integration (mass and envelope). As an output, the sizing task must allow the designer to specify the

1 Corresponding author: Tel.: (+33) 561559960; Fax: (+33) 561559950; E-mail: marc.budinger@insa-toulouse.fr

parameters that define the power transmission system components. The proposed sizing process is described in detail in section 2.

Besides the complexity of multi-criteria design, the complexity also stems from the huge number of parameters associated with the above mentioned criteria. Section 3 is dedicated to scaling laws that can reduce the number of parameters to be handled by the designer. The interest of this choice is illustrated through the general case of rolling bearings, then in the particular case of ball/roller screws.
Section 4 describes the tools supporting the methodology, which are implemented here as a Modelica library.
Section 5 is used to point out the interest of the proposed methodology for the preliminary design of a redundant aileron actuator for a single aisle aircraft. Special attention is paid to the geometrical integration, the mode of operation and the service life.
The last section summarizes the advances made possible by the proposed approach and suggests further developments.

2. PROPOSED METHODOLOGY FOR THE PRELIMINARY DESIGN

As defined by [10, 11] a methodology is a collection of related processes, methods and tools where:
- a process is a logical sequence of tasks performed to achieve a particular objective ("WHATs");
- a method consists of techniques for performing a task ("HOWs");
- a tool is an instrument that, when applied to a particular method, can enhance the efficiency of the task (supports the "HOWs").

The proposed methodology is applied in the framework of the Fig. 1 "sizing wave" process that propagates backwards, in the direction opposite to the functional power path. The system components are considered in sequence, from the customer's power need to the system power source. As shown by the flow diagram of Fig. 1 for a given component, the proposed process is iterative and decomposed into four tasks for each component, which are detailed in the following sections. The process is iterated until the calculated system performance matches the customer's requirements.

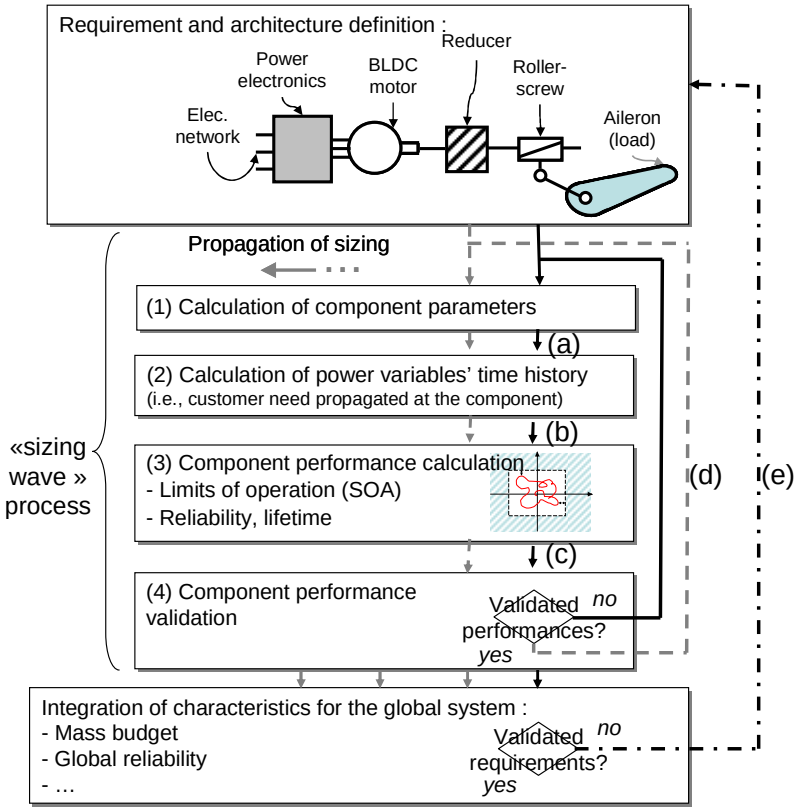

Fig. 1: "Sizing wave" process

2.1. TASK 1. AUTOMATIC CALCULATION OF THE WHOLE VECTOR OF COMPONENT PARAMETERS

The proposed "method" is based on reducing the number of component parameters to be handled by the designer. The parameters involved in the sizing process are then automatically calculated with estimation or prediction models [12]. These models should reach a similar level of representativeness and have to reflect the state-of-the-art of technology. An efficient way to ensure this homogeneity is found by developing the models through a uniform approach. The most direct approach is to use databases like some software designers [13] do. This approach has the disadvantage of being cumbersome, or even impossible, to implement in the absence of product ranges, as in aerospace applications. For the same reason, metamodels using response surface methodology [14], interesting for optimization, seem inappropriate here. Some design codes from mechanical design standards may also be used [6]. The latter approach requires a significant level of expertise for each component and is therefore cumbersome to implement and reduces the number of technologies that can be considered, depending on the availability of experts. The use of scaling laws or similarity rules has the advantage of needing only one reference component for the complete evaluation of a range. Such a modelling approach has already been applied for system design or comparison of technologies [15-20].

Estimation models used in system-level design aim to link functional characteristics (input) to secondary characteristics (output). To this end, we propose to define four different types of parameters here:

- **Definition parameters (input).** To support the designer in pre-specifying or selecting off-the-shelf components, the definition parameters are defined as those given in the product requirement definition and commonly used in manufacturers' datasheets for component selection. For example, the proposed definition parameters for a ball-screw are the nominal output force, the pitch, the stroke and the lifetime. Some parameters are defined by requirements (e.g., life time) and architecture choices (e.g. pitch). The others should be defined by iteration during the sizing process (e.g. nominal output force and stroke).
- **Simulation parameters (output).** From the definition parameters, the scaling laws generate the simulation parameters that are required for the time domain simulation of step 2 (Fig. 1). In the case of a ball screw, the simulation parameters are those affecting the instant power need and the dominant dynamics (e.g. moment of inertia, friction)
- **Integration parameters (output).** The scaling laws also have to generate the integration parameters that are used to verify that the customer's integration needs are met. The integration parameters are typically associated with mass and geometry (e.g. ball screw's diameter, length and mass per unit length).
- **Operational parameters (output).** The estimation models also have to generate the operational parameters that define the Safe Operating Area (SOA). The SOA is representative of the limit of operation of the component in terms of its ability to fulfil its mission safely during the whole specified service life (e.g. ball screw's maximum output force, maximum speed and dynamic load).

Input to task 1 is the vector of definition parameters as defined by the designer. The first loop of the sizing wave is run with the initial vector provided by the designer from rough sizing. Output of task 1 is the vector of simulation and integration parameters that is automatically generated by the specifically developed library of component models that integrate the proposed estimation models described in section 3. Even though this step involves only pure algebraic calculation, the numerical calculations are implemented with the Modelica [21] time domain simulation language, which was selected to meet the specific needs of step 2.

2.2. TASK 2. CALCULATION OF POWER VARIABLE TIME HISTORY.

The selected "method" consists of the inverse simulation of the full top-level component model that allows backward propagation of power variables. Inverse simulation of power variables is enabled by modelling based on a non-causal language, Modelica [22], which have recently been introduced as industrial "tools". Step 2 requires continuous time dynamic models that are expressed by Differential Algebraic Equations (DAE) and are based on a lumped parameter representation of the component. In the early preliminary design phase, the simulation models have to capture all the relevant states without being too detailed. For example, only the mechanical inertias, electrical resistances, electromotive forces, thermal capacitances and resistances, and the dominant energy losses are relevant for the power sizing and integration of electromechanical transmission components. More detailed phenomena, such as electrical inductance, mechanical compliances, and backlashes (etc.) can be neglected in a first approximation as they usually introduce second-order effects. The Modelica models are simulated here (see Sections 4 and 5) within the Dymola [23] environment. The Modelica choice was motivated by the non-causal and object-oriented capabilities [21] that suit the virtual prototyping of multidisciplinary systems well [3-9]. Compared with a causal approach, where relations between variables are oriented and predefined by procedural statements, non-causal modelling involves only non-oriented relations between variables [21] that are defined by declarative statements. The advantage of a non-causal model is its ability to carry out both the direct and inverse simulations [24-25] which can meet different engineering needs through the mechatronic V design cycle [26]. Corresponding mathematical and numerical aspects are not developed in this article

but are described in [27]. A modal analysis or the verification of a controller is generally supported by a direct simulation. As illustrated in Fig. 2, efficient power sizing avoids modelling the controller when using inverse simulation of the power flows going from the actuated load to the power source through the architecture components [24].

Input of task 2 is the vector of simulation parameters generated during step 1 and the mission profile supplied by the customer. Output of step 2 is the time history of all the component variables (e.g. ball-screw's instant screw speed, acceleration or torque) that are automatically calculated using the specifically developed dynamic model library.

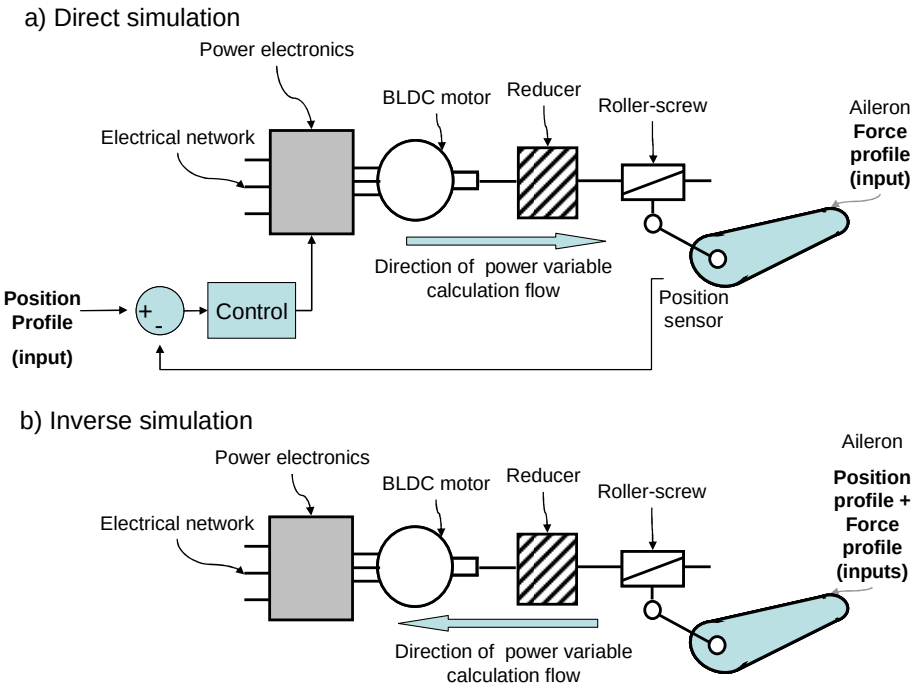

Fig. 2: Inverse vs direct simulation of an actuation system controlled in position

2.3. TASK 3. PERFORMANCE CALCULATION

The "method" consists of collecting the time domain data and extracting quantities that are representative of the power capability, the operating limits, the service life and the reliability. Safe operation domain analysis and degradation models for lifetime and reliability have been developed and are involved as key "tools" for this task [28]. Correct sizing must ensure that, during a mission, the components' transient and continuous operational boundaries are not exceeded. On the one hand, a mission profile included within the transient operational capabilities of the components prevents rapid degradation (e.g. overheating of electric motor windings). On the other hand, a mission profile included within the continuous operational boundary ensures confidence in the components throughout their operational lifetime by taking slow degradations (e.g. mechanical fatigue and thermal ageing) into account. The continuous operational boundary should include reliability and lifetime aspects. Over time, slow degradations of component properties (e.g. mechanical strength) progressively increase the probability of their being exceeded during a mission and thus increase the probability of failure. In the proposed "method", an adapted formulation of the corresponding reliability has been developed that compares the specified and obtained standard lifetimes to calculate the actual reliability parameters of the component for the specified lifetime. Then the reliability parameters can be tailored efficiently by iterating on the component sizing or lifetime. The methods, models and references associated with this stage are developed further in [28].

The inputs of task 3 are the operational requirements and the time history of the component variables (step 2). The output of task 3 is the effective performance of the actual design in terms of safe operating area (SOA) and reliability for the service life.

2.4. TASK 4. COMPONENT DESIGN VALIDATION

The "method" consists of summarising the actual design capabilities and comparing them with the required power needs. The integration parameters are taken directly from step 1 while power capability, operational limits, lifetime and

reliability come from step 3. For the time being, the iterative process is based on the designer decision to run another loop modifying the definition parameters with respect to the difference between required and calculated power capabilities. However, it has been observed, in many and various case studies, that convergence is ensured within a few iterations.

2.5. SYNTHESIS AND OPTIMIZATION

Once power sizing is achieved for all components, it is possible to synthesize the whole system characteristic, which may take the form of a mass balance, global reliability or overall size. A manual or automatic iteration (optimization) over the entire architecture can be implemented on the parameters of the global architecture. Ref. [29] gives an example of the sizing process automation (link (d) on Fig. 1) and global optimization (link (e) on Fig. 1). The rest of this paper focuses more specifically on the models for the sizing process needed.

3. PRELIMINARY SIZING MODELS WITH SCALING LAWS

The appendix recalls the notations and geometrical assumptions adopted here for establishing scaling laws.

3.1. PROPOSAL OF SCALING LAWS FOR ROLLING ELEMENTS

3.1.1. Proposed model for bearings

Rolling bearings are basic elements present in most mechanical devices. In some applications, like those addressed in this paper (Section 5), the resulting radial and axial forces are very large and cause the rolling bearing to have a major influence on the component geometrical envelope and mass. Therefore, it is interesting to develop a dedicated sizing and simulation model for this basic component and to re-use it later in the roller-screw model. Moreover, the relative simplicity of the rolling bearing makes it a good start for introducing the proposed approach.

In the context of power sizing in preliminary design, bearings are assumed to be ideal rigid pivots. A three-dimensional translational connector is added to this model, in order to simulate withstanding the radial and axial forces transmitted to the bearing and to calculate the equivalent static or dynamic load that is a combination of these forces [33]. Selecting a bearing with an adequate load rating with respect to its mission ensures confident operation throughout its lifetime. Typically, in bearing manufacturers' catalogues (e.g.,[30-32]), the primary selection parameter is F_{nom} the nominal equivalent dynamic load. Therefore, the dynamic load is chosen as a definition parameter. The scaling laws, developed in this section, aim to establish the relationships between this definition parameter and the simulation, integration and operational limit parameters.

For mechanical components like bearings, the mechanical stresses in the materials must be kept below elastic, fatigue or contact pressure (Hertz) limits [33]. Taking the stress limit σ_{max} to be the same for a full product range yields

$$\sigma_{\max}{}^{*} = 1 \Rightarrow F_{nom}^{*} = l^{*2} \tag{1}$$

where F_{nom} is the nominal load applied to the bearing and l its dimensional parameter.

The integration parameters are the diameters and length of the bearing, which define its geometrical envelope. Assuming geometrical similitude (see appendix), all these geometrical dimensions are related to a single scaling ratio l^{*}. The scaling law or the variation relative to a reference component of bearing mass M is thus expressed by:

$$M^{*} = l^{*3} = F_{nom}^{*3/2} \tag{2}$$

Since the bearing sizing is based on mechanical stress, the F_{max} maximum load variation is proportional to the nominal load:

$$F_{\max}^{*} = F_{nom}^{*} \tag{3}$$

The frictional losses increase with the speed, causing the temperature of the bearing to rise. Consequently, the lubricant film becomes thinner and the friction coefficient increases. Beyond a critical temperature, this phenomenon rapidly causes unacceptable wear damage. In other words, the speed limit of the bearings is the image of a maximum admissible temperature increase during steady nominal operation. The heat exchange between the bearing and its environment is mainly convective and, to a first approximation, the convection coefficient is assumed constant. Thus, the

variation of the thermal resistance depends on the variation of the external surface area of the bearing. Moreover, the losses in the bearing are proportional to the mechanical power transmitted. Thus:

$$\left.\begin{aligned} Q_{th}^{*} &= R_{th}^{*-1} = l^{*2} \\ Q_{th}^{*} &= \upsilon^{*}.F_{nom}^{*} = \omega^{*}.l^{*}.F_{nom}^{*} \end{aligned}\right\} \Rightarrow \omega_{\max}^{*} = F_{nom}^{*-1/2} \qquad (4)$$

where Q_{th} is the thermal power dissipated by the bearing, R_{th} is the thermal resistance equivalent to the convection between the bearing and its environment, υ is the tangential velocity of the bearing balls (or rollers), ω is the speed of the bearing and ω_{max} is its maximum admissible speed.

Based on the scaling laws described in this section, it is possible to calculate the three integration parameters (length, diameter and mass) and the two operational limit parameters (maximum admissible speed and load) of the proposed rolling bearing model from the nominal load only and a reference representative of a given technology (e.g. type of materials).

3.1.2. Proposed model for ball and roller screws

Ball and roller screws transform a rotational motion into a translational one or vice-versa. The power is transmitted between the nut and the screw via balls or rollers. The use of rollers instead of balls significantly increases the points of contact. So, while it allows much higher forces to be transmitted, it decreases the power transfer efficiency. Axial pre-loading is commonly used in applications requiring high accuracy and frequent speed reversals. In the context of the preliminary design and for the purpose of simplification, the pre-loading of the ball and roller screw is not taken into account in the following example.

In the context of power sizing for preliminary design, the ball and roller screws are assumed to be rigid but subject to acceleration and frictional losses. Consequently, we propose a simulation model (Fig. 3) made of the screw rotational inertia, an ideal rotational-translational motion transformation, a friction loss depending on the quadrant of operation, the nut translational inertia and, finally, the end-bearing, for which the model is equivalent to that of the rolling bearing described in section 3.1.1. The sizing of the end-bearing is driven by the equivalent static/dynamic load it has to stand. Therefore, the simulation model of bearings has a 3D force port that interfaces with the radial and axial forces making up this equivalent load.

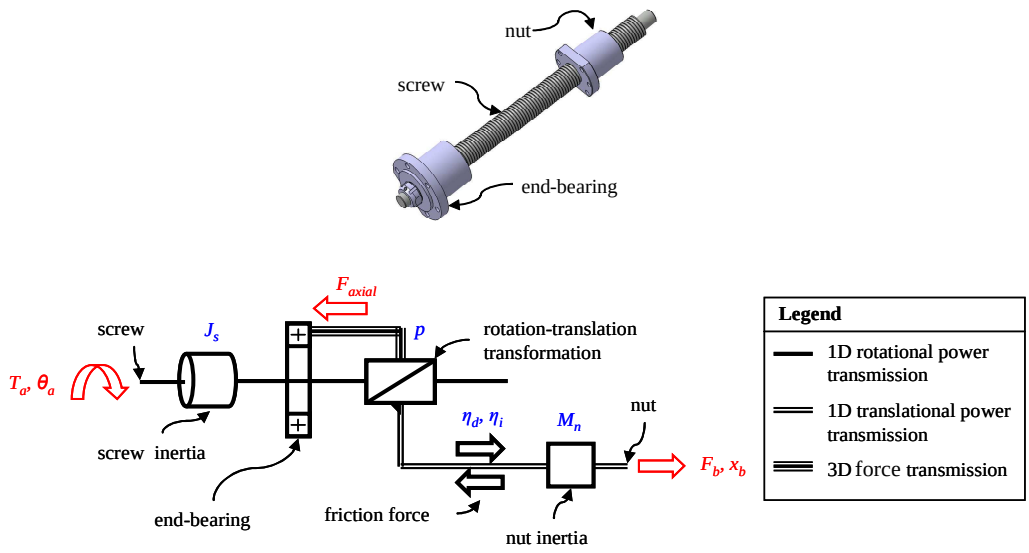

Fig. 3: Main components of ball or roller screws and equivalent model

As shown in Fig. 3, the proposed model involves five simulation parameters: J_{sc} the screw moment of inertia, p the pitch of the screw per unit angle, η_d the direct and η_i the indirect efficiency, and M_n the nut translational inertia. The friction force is calculated [34] from the direct or indirect efficiencies depending on the quadrant of operation (driving or back driving**).**

Typically, in ball and roller screw manufacturers' catalogues [24,25], the primary definition parameters are pitch and the nominal output force F_{nom}, which ensures confident operation during the component's lifetime. Therefore, the nominal force was chosen to be the definition parameter from which the definition, simulation and operational limit parameters were derived.

As for the bearings, the scaling laws of the ball and roller screws are based on a fixed maximal mechanical stress. The length of the screw depends on the application, i.e. the required stroke, which is a definition parameter. Consequently, this component cannot be scaled fully homothetically like the nut and end bearing. It is rather interesting to scale its mass M_l and moment of inertia J_l per unit length:

$$\begin{cases} M_l = \int \rho_m . dS \Rightarrow M_l^* = l^{*2} = F_{nom}^* \\ J_l = \int \rho_m . r^2 . dS \Rightarrow J_l^* = l^{*4} = F_{nom}^{*2} \end{cases} \quad (5)$$

The screw mass and inertia are then obtained by multiplying the mass and inertia per unit length by the total length, which is the sum of the stroke plus the nut and end bearing lengths. The total mass of the ball and roller screw is the sum of its different part masses. Similarly, the overall moment of inertia is the sum of the rotating element moments of inertia. In the same way, the model translational inertia is the sum of the translating element masses.

The efficiency of ball and roller screws mainly depends on rolling frictions. The direct and indirect efficiencies are obtained [31,33] from the friction coefficient, the pitch of the screw, and its diameter, which is deduced from scaling laws.

As for the bearing, ball and roller screws are very sensitive to local deformations. In the same way, the variation of the maximum static force $F_{max,0}$ is proportional to the nominal force (3). Another factor limiting the maximum force applied to the screw is the risk of buckling. The maximum force that can be applied to the screw with respect to buckling is obtained by a common calculation of the first mode of deformation (Euler) according to dimensions deduced by scaling laws.

At high rotational velocities, the imperfect balance of the screw causes transversal vibrations that can be damaging. The corresponding maximum rotational velocity is obtained by a common calculation of the first mode of vibration of a full cylindrical shaft mounted on two simple supports. Safety and mounting factors are applied in order to take account of possible inaccuracies in the mounting, as well as different possible mounting configurations. The other screw rotational velocity limit is generally due to the nut mechanism. It is obtained experimentally as the nut maximum admissible translation velocity. The set of scaling laws (6) reflects the aforementioned screw speed limits:

$$\begin{cases} \omega_{\max,vib}^* = k_m . F_{nom}^{*1/2} . l_s^{*-1} \\ \omega_{\max,nut}^* = F_{nom}^{*-1/2} \end{cases} \quad (6)$$

where $\omega_{max,vib}$ is the screw speed limit due to vibrations, $\omega_{max,nut}$ is the screw speed limit due to the maximum admissible nut translational velocity and l_s is the screw length. The resulting lowest speed limit constrains the ball or roller screw operation. The factor k_m is to be applied to the corresponding scaling law to refer to a change of mounting compared to the reference mounting type.

Based on the scaling laws described in this section, it is possible to calculate for the proposed ball and roller screw model: five simulation parameters (screw moment of inertia, screw pitch, direct and indirect efficiencies and nut translational inertia), nine integration parameters (lengths, diameters and masses of the screw, nut and end-bearing) and four operational limit parameters (maximum admissible output forces and screw speeds with respect to vibrations, buckling and nut limit). It is interesting to note that the designer has only to define three definition parameters (screw pitch, nominal output force and stroke) along with a reference representative of a given technology (e.g. recirculating balls, planetary rollers).

3.1.3. Validations of the scaling laws

The scaling laws established above and summarized in Table 1 were compared with the manufacturers' data [30-32] for validation by focusing on the mass. These laws, validated on an industrial product range here, can be used with specific domain components.

Fig. 4 (a) to (d) shows the validations in log-log graphs which represent the power laws as straight lines. The scaling laws represented were calculated from a single reference (see appendix for the use of references with scaling laws) which was chosen near the geometric mean of the definition parameter range here. These curves show that the manufacturers'

products follow the trends given by the established scaling laws. Each comparison is given with an evaluation of the relative range width of the manufacturer's products around the scaling law drawn. Independently of the choice of the reference, the established scaling laws lead to existing or feasible products. It also appears that the manufacturers tend to extend the range of their products by varying some dimensions without keeping homothetic scaling in order to reduce manufacturing and inventory costs. Finally, note the wide range of validity of the established scaling laws, which generally covers three decades of the definition parameter, while the design exploration of an actuator rarely covers more than one decade.

Table 1: Established scaling laws for the rolling bearings and ball and roller screws.

Parameter	***Unit***	***Rolling bearings (incl. end-bearings)***	***Eq.***	***Ball and roller screws (nut and screw)***	***Eq.***
Definition parameter(s)		Dynamic load capacity F_{nom} (N)		Nominal output force F_{nom} (N)	
Integration parameters					
Length, diameter, width and depth	*m*	$l^* = F_{nom}^{*1/2}$	(1)	$l^* = F_{nom}^{*1/2}$ (diameter)	(1)
Mass	*kg*	$M^* = F_{nom}^{*3/2}$	(2)	$M^* = F_{nom}^{*3/2}$ (nut)	(2)
Mass per unit length	*kg/m*	-		$M_l^* = F_{nom}^*$ (screw)	(5)
Simulation parameters					
Moment of inertia	$kg.m^2$	-		$J_n^* = F_{nom}^{*5/2}$ (nut)	
Moment of inertia per unit length	*kg.m*	-		$J_l^* = F_{nom}^{*2}$ (screw)	(55)
Operational limit parameters					
Maximum force	*N*	$F_{\max}^{*1/2} = F_{nom}^{*1/2}$	(3)	$F_{\max}^* = F_{nom}^*$	(3)
Maximum speed	*rd/s*	$\omega_{\max}^* = F_{nom}^{*-1/2}$	(4)	$\omega_{\max,vib}^* = k_m.F_{nom}^{*1/2}.l_s^{*-1}$ $\omega_{\max,nut}^* = F_{nom}^{*-1/2}$	(6)

Fig. 4(a) and (b) show the validity limits of the scaling laws for rolling bearings and end-bearings. The limits occur at either very high or very low values of the definition parameter, where the sizing constraint driving the component dimensions might change. In order to prevent abusive use of the scaling laws, a verification of the definition parameter values with respect to the manufacturer's catalogue ranges has been implemented in the proposed general component model (see section 4).

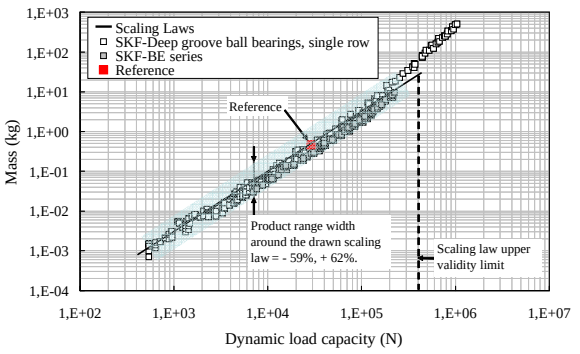

(a) Rolling bearing mass as a function of the dynamic load capacity.

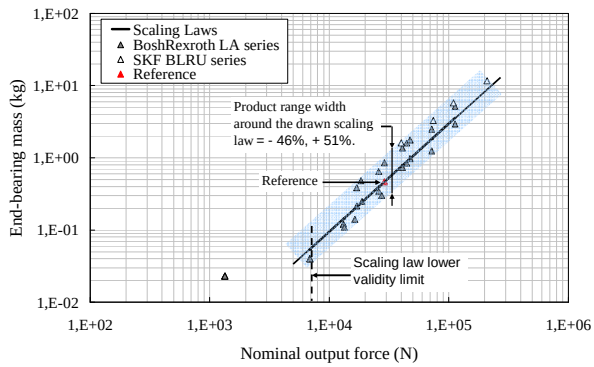

(b) Ball and roller screws' end-bearing masses as a function of the nominal output force.

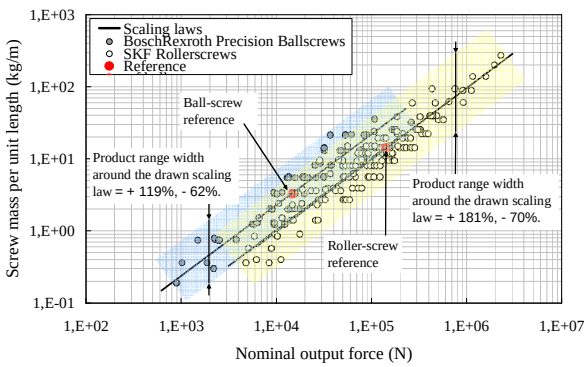

(c) Ball and roller screws' screw mass per unit length as a function of the nominal output force.

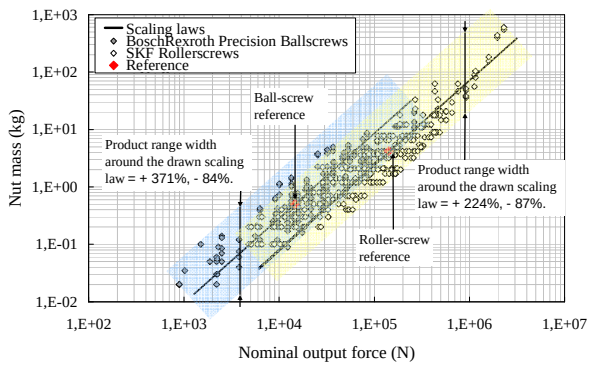

(d) Ball and roller screws' nut masses as a function of the nominal output force.

Fig. 4: Scaling laws validation with manufacturers' catalogue ranges

4. TOOLS SUPPORTING THE METHODOLOGY

The tools, which support the "HOWs" of the methodology presented in section 2, take the form of an in-house library of electromechanical component models (Fig. 5) here. The parameter setting interface (upper part of Fig. 5) presents parameters to be set by the user. Minimizing the number of parameters aims at facilitating. the manual use, exploration or optimization during the preliminary design phases.These component models can be assembled in any way to form electromechanical power transmission architectures as illustrated in Fig. 6 for the aileron actuator of the section 5 case study. In this way, the complete flight control actuator model requires a total of seventy-five parameters for electronic, electromechanical, thermal and mechanical components. As shown by the parameter flowhart in Fig. 6, the parameters useful for simulation model (label 3), transient operation domain (label 4), geometrical integration test (label 5), mass budget (label 6) can be provided by sizing models (label 2, scaling law models) from a few definition parameters (label 1) and given reference parameters.

The task 3 in Fig.1 of the "sizing wave" process is performed for transient and continuous operational boundaries:

- by the block (4) of Fig.6 that computes the margins between the simulated mission profile and the SOA limits.
- by the block (8) of Fig. 6 that provides the continuous quantities that are equivalent to the mission profile for a typical reliability of 90%. It helps the user to specify the definition parameters adapted to the mission profile.
- by the block (7) of Fig. 6 to size the components for a given reliability.

The task 4 is realized by the block (9) of Fig. 6 which enables validating the use of the component in the authorized operation area. This block also verifies that the component remains within an industrial range if the limits of this range are defined in the reference component.

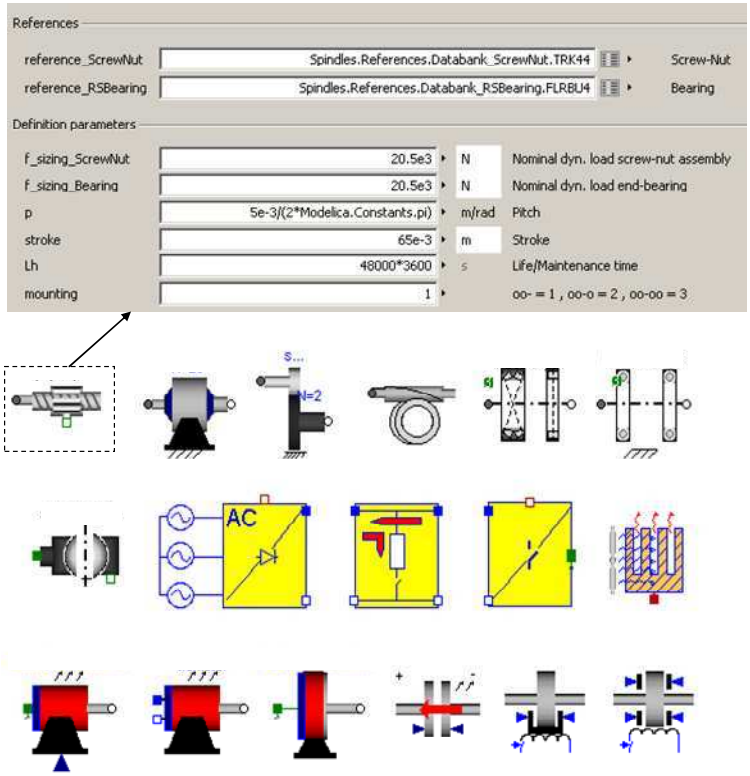

Fig. 5: In-house library of electromechanical component models

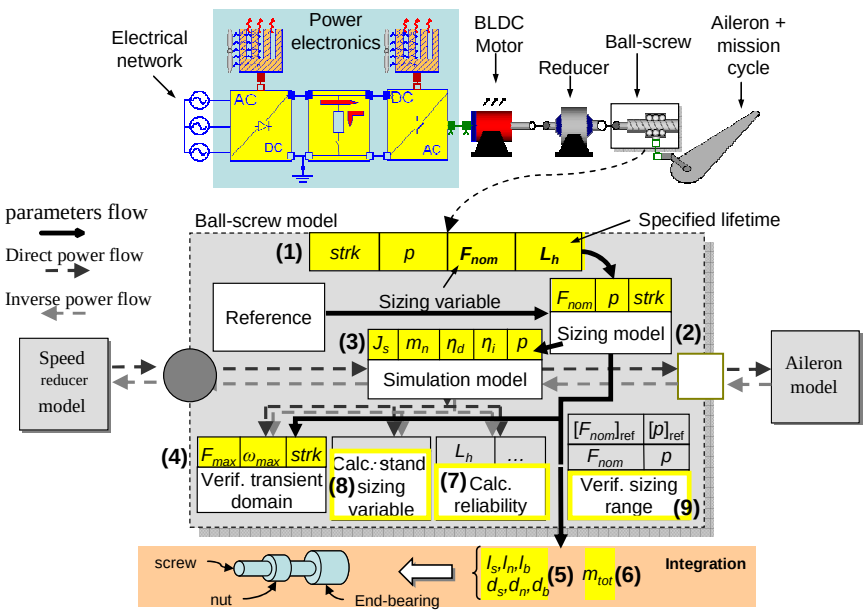

Fig. 6: Proposed model structure for the pre-design (example of the ball-screw).

5. CASE STUDY: PRE-DESIGN OF AN AILERON ACTUATOR

Taking advantage of the development of power electronics and permanent magnets, electromechanical actuators show great promise with respect to automatic operating mode, power management, reliability and maintainability, for example. For this reason, it is interesting to study the replacement of current actuators based on a technology that is less promising in these fields (e.g. hydraulic) by electromechanical ones. A good illustration of this trend is the research effort towards the "more electric aircraft" in aeronautics [35]. In this context, the test case presented aims to pre-design an electromechanical actuator driving the ailerons of a single aisle commercial aircraft.

To illustrate the proposed methodology, the study presented focuses on the very first steps of actuator design. In particular, it addresses the electro-mechanical parts of the power transmission (from the electrical motor to the roller-screw), i.e. the power sizing and integration study. Based on the principles described in section 2, the general methodology is applied as follows. The load model and associated mission profile are supplied by the customer. Then, each component mission profile (e.g. force vs. speed curve for the mechanical components) is computed by inverse simulation, following the entire actuation chain backwards. Thus, every component is sized to match its mission profile. Finally, the integrability of the resulting actuator geometrical envelope within the wing profile is verified and the total mass is computed for analysis.

5.1. DESIGN HYPOTHESIS AND REQUIREMENTS

For this case study, an electromechanical actuator with the same kinematics as the current hydraulic one (i.e. three pivots, one lever arm and an actuator stroke of 0.04 m, see Fig. 7) is developed. In the current configuration, two actuators are connected to the load in parallel and operate in active-damping mode, where one drives the aileron while the other acts on standby as a damper. When the active actuator fails, it is switched into the damping mode while the other becomes active to take over the mission duty. With the current hydraulic technology, the damping mode is achieved by bypassing the two hydraulic chambers of the actuator cylinder. With an electromechanical solution, the damping mode requires de-clutching the failed actuator and providing damping means. However, for the sake of simplicity the de-clutching and damping functions are not addressed in this study.

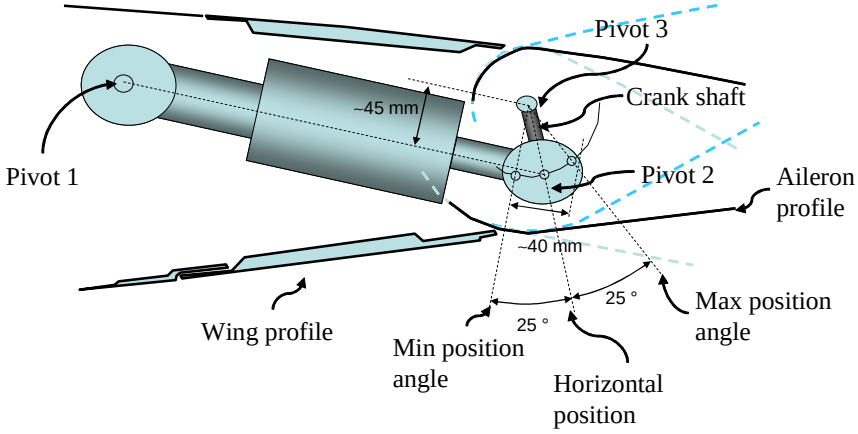

Fig. 7: Kinematics of the hydraulic aileron actuator

The model of the load used for this study is an equivalent aileron moment of inertia of 1 kgm^2, with a lever arm of 0.045 m. The force generated by the back-up hydraulic actuator is composed of the damping specified by the aircraft manufacturer and the inertia of the hydraulic cylinder. It does not notably impact the power sizing and is therefore neglected. In the same way, the low friction in the pivots of the load kinematics is not taken into account. Finally, the aerodynamic forces are given by the aircraft manufacturer, together with the mission profile as a function of time.

On the one hand, the mechanical components are sized with respect to the maximum force and speed, and also the fatigue cumulated over their specified lifetime. On the other hand, the motor is sized with respect to the maximum force and speed, and also thermal constraints (e.g. temperature, RMS[2] torque). In consequence, we propose to use two mission profiles for the sizing task: one representative of maximum force and speed and the other representative of the thermal loads. Fig. 8 illustrates these two mission profiles propagated at the actuator output (pivot between the actuator and lever arm) in the force-speed power plane.

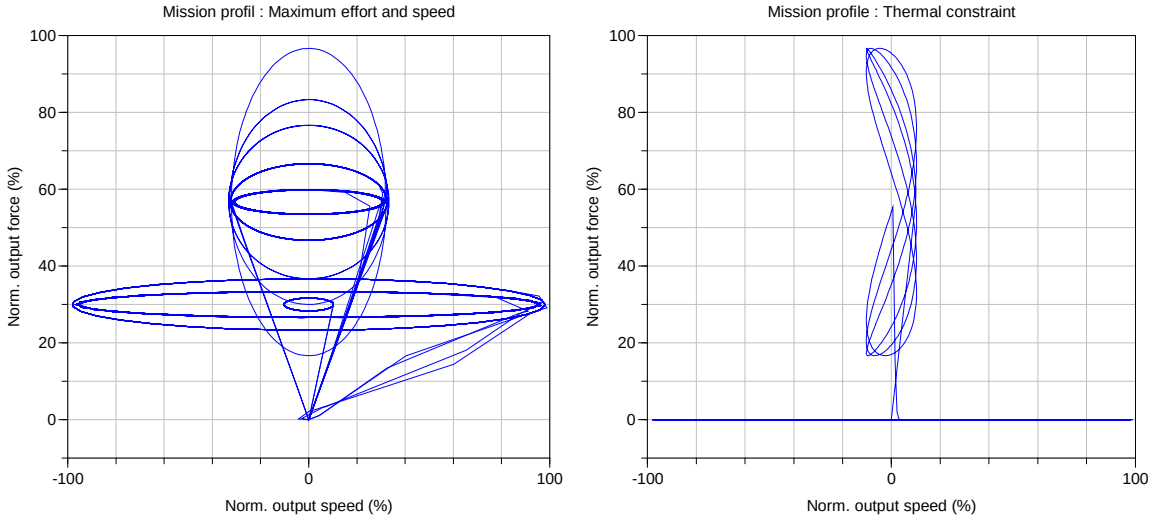

Fig. 8: Mechanical (left) and thermal (right) aileron mission profiles at the actuator output.

5.2. SIZING

The sizing methodology described in section 2 is used to size the components. Links (a), (b) and (c) in Fig. 1 between the tasks 1, 2, 3 and 4 are automatically made during the Modelica model simulation. The simulation of a mission profile takes only a few minutes or even less for a relatively long (1000s) and variable profile. The ability of the component to fulfil its function safely is assessed by verifying the integrity of its SOA during a complete mission cycle (with the same type of force-speed power plane as in Fig. 8 by means of block (4) of Fig. 6) and by calculating its reliability over its entire lifetime for continuous or intermittent duty cycles (block (7) of Fig. 6). Thus, the user can adjust the design iteratively to stay within the component SOA and reach the desired lifetime reliability, while meeting integration requirements. More information about lifetime and reliability models can be found in [28]. It should be noted that the rated dynamic load criterion is valid only for a component staying within its SOA.

The model structure implemented does not allow direct calculation of the definition parameters corresponding to a specified safe operation. To make this calculation, the corresponding iterative process, link (d) on Fig. 1, has to be carried out by the user. This process is supported by the calculation of the margins between the simulated operation and SOA limits (e.g. maximum nut force and screw speed margins calculated by block (8) of Fig. 6). The user is also supported by the calculation of the rated dynamic load (e.g. rated nut force, block (9) of Fig. 6), which ensures safe operation for the entire component lifetime (typically with a reliability of 90%). This process can be performed automatically as illustrated in [29].

In order to minimize the size of the electrical motor, the overall reduction ratio of the transmission is set to match the electrical motor maximum speed during the mission cycle. First, the pitch of the roller-screw is minimized (5 mm/rev) and thus the mass of the speed reducer is minimized. The speed reducer ratio is adjusted to match the maximum speed (calculated by scaling laws) of the motors in order to minimize the motor output torque and thus its mass. This process corresponds to iterations of link (e) in Fig. 1 and compares several possible solutions. Done by hand here, they can easily be automated as in [29], to minimize mass or integration volume for example.

[2] The RMS torque is equivalent to the steady state torque that would produce the same motor heating over a given mission cycle.

5.3. RESULTS

The results obtained by following the sizing methodology as described in Section 5.1 are gathered together in Table 2. From these results, it is possible to carry out an efficient mass and integration analysis. Table 2 also includes the component references used by the scaling laws, and off-the-shelf components corresponding to the scaled ones. It is clear that, although the references are often far away from the scaled components (e.g. the nominal torque of the speed reducer reference is more than twenty times that of the scaled one) the scaling laws match existing off-the-shelf products accurately.

The comparison between the scaled and off-the-shelf actuators in Table 2 illustrates the accuracy of the approach developed. It can be seen that the off-the-shelf actuator is heavier than the scaled one. This difference of mass is mainly due to the fact that, when there is no off-the-shelf component exactly matching the scaled one, then the next biggest component is selected. In the same way, the chosen reducer has a maximum reduction ratio lower than the scaled one. In consequence, the electric motor has a greater RMS torque and is heavier. From the dimensions listed in Table 2, the actuator geometry can be represented within the wing profile to verify its integrability as illustated in Fig. 7. The maximum allowed length of the actuator is given by the distance between the pivots 1 and 2. Mounting all the components in line does not allow the actuator to fit between these two pivots. A possible solution is to mount the brushless motor and the reducer alongside the roller screw, inserting spur-gears between the reducer output and the roller-screw input.

Table 2: Actuator sizing for a lever arm length of 0.045 m, a component lifetime of 48 000 hours and an active/damping configuration (baseline).

	Brushless motor	**Speed reducer (epicyclical)**	**Roller screw (stroke = 0.04 m)**	
Reference	MAXON EC-60-167131 RMS torque = 0.83 Nm	REDEX-ANDANTEX SRP1 Nominal torque = 370 Nm Reduction ratio = 7	SKF TRK 44 (roller-screw) SKF BLRU 4 (end-bearing) Nominal forces = 86.9 kN	
Diameter **Length** **Mass**	0.06 m 0.129 m 2.45 kg	0.17 m 0.18 m 13.8 kg	0.086 m 0.3 m 11.4 kg	
Scaled	RMS torque* = 0.23 Nm	Nominal torque* = 17 Nm Reduction ratio = 71	Nominal force** = 26 kN Pitch = 7.96 10^{-4} m/rd	**Actuator mass = 3.1 kg**
Diameter **Length** **Mass**	0.04 m 0.09 m 0.8 kg	0.064 m 0.078 m 0.8 kg	0.047 m 0.142 m 1.5 kg	
Off-the-shelf	MAXON EC-45-136212, RMS torque = 0.28 Nm	NEUGART PLE 60, Nominal torque = 18 Nm Reduction ratio = 64	SKF TRK 21 (roller-screw), Nominal force = 27.85 kN Pitch = 7.96 10^{-4} m/rd SKF BLRU 2 (end-bearing), Nominal force = 27.9 kN	**Actuator mass = 4 kg**
Diameter **Length** **Mass**	0.045 m 0.101 m 1.1 kg	0.063 m 0.118 m 1.1 kg	0.049 m 0.162 m 1.8 kg	

* sized with respect to the maximum force to be transmitted.
** sized with respect to the lifetime (fatigue or thermal constraint).

In order to take advantage of the proposed methodology, further design explorations were carried out. The first investigation aimed to study the effect of varying the length of the lever arm (increased from 0.045 to 0.065 m), the second aimed to evaluate the influence of the actuator lifetime (reduced from 48000 to 24000 flight hours) and the last one assessed the influence of the mode of operation (active/active configuration instead of active/damping configuration).

As shown in Table 3, increasing the lever arm length tends to decrease the actuator mass by 25% as a direct consequence of the sizing of each component. In the baseline, the sizing of the roller-screw and the speed reducer is dominated by the maximum force to be transmitted, while the motor is sized with respect to thermal considerations. In consequence, modifying the actuator lifetime, while keeping the same reliability, impacts the motor sizing only and thus limits the mass saving to 6%. On the other hand, dividing the lifetime by two induces a major increase in the operational costs (maintenance, repairs, replacement) of the actuator. Finally, when the two actuators are in an active/active configuration, the individual duty load is divided by two. However, in case of failure, a single actuator must be able to fulfil the mission duty during at least one cycle. Therefore, the maximum force to be transmitted and the thermal constraint in the motor remain identical. Consequently, the sizing is the same for the active/active and active/damping (baseline) configurations.

Table 3: Mass results for different lever arm lengths, component lifetimes and duty ratios.

	Baseline	**Lever arm increased by 44 %.**	**Lifetime divided by 2.**	**Active/active instead of active/damping configuration.**
Duty (%)	100	100	100	50
Lifetime (h)	48 000	48 000	24 000	48 000
Lever arm length (m)	0.045	0.065	0.045	0.045
Roller-screw mass (kg)	1.5*	1.1**	1.5*	1.5*
Speed reducer mass (kg)	0.8*	0.6*	0.8*	0.8*
Electrical motor mass (kg)	0.9**	0.7**	0.7**	0.9**
Total mass (kg)	3.2	2.4	3	3.2
Mass saving (kg)		0.8 (25 %)	0.2 (6%)	0 (0%)

* sized with respect to the maximum force to be transmitted.
** sized with respect to the lifetime (fatigue or thermal constraint).

Finally, besides providing interesting results, this comparative study has shown how the use of the library developed allows fast modelling, and the exploration of different design configurations (active/damping, active/active) and design parameters (lever arm length and lifetime), thus supporting good technical decision-making early in the preliminary design by providing rich insight in an efficient way. This methodology can be extended to more complex multi-domain systems and design criteria. To this end, further component models of electrical power supply (e.g. batteries, ultra-capacitors), modulation (e.g. power electronics), transformation (e.g. electrical motors) as well as mechanical power transmission (e.g. speed reducers) and end-effectors (e.g. rack and pinions, spur gears) have been developed or are under development. In some cases, the high dynamic performance required for the system is a critical issue. Therefore, it is planned to extend the component models with a modal analysis capability (e.g. with structural anchorage and transmission compliances) and to take the controller design and its impact on the actuator performance into consideration.

6. CONCLUSION

The proposed methodology is intended to improve the preliminary design of power transmission systems by providing fast and efficient means for multi-criteria sizing and virtual prototyping. The main advances implied by this methodology are a reduction of the size of the parameters vector to be handled by the designer, generation of a multi-purpose top-level component library and automation of the sizing process. In this aim, a reduced vector of top-level definition parameters has been introduced, from which all other parameters are automatically calculated to feed the simulation models that can support power sizing, service life and reliability studies. Scaling laws have been proposed as the enabling tool for parameter vector reduction. This choice allows all the parameters to be linked to the definition parameters on the basis of physical design constraints. The component models have been developed in an innovative way, not only considering time domain simulation but also addressing reliability, geometrical envelope and mass as a whole. Model implementation has drawn benefit from non-causal modelling and simulation capabilities recently offered by the Modelica language that allows the same models to be used for any step of the proposed process. First, the interest of the proposed methodology has been illustrated by developing and validating the roller screw sizing model. Then, the whole process has been applied to the preliminary sizing of an aileron actuator. The total mass has been rapidly calculated from the automatic sizing process considering power, service and reliability requirements. This case study has shown how the proposed methodology can provide a fast and efficient means of design exploration, being able to deal with power transmission as well as service life or mode of operation. In order to draw even more benefit from this new approach, works are in progress to extend the model library, address environment requirements, include optimisation features and ensure continuity of the model-based systems engineering. In this framework, it is planned to link the present process to requirements and architecting (upper stage) and to 3D CAD and FEM analysis (lower stage).

ACKNOWLEDGMENTS

The presented work has been partly funded by the following projects: the French ANR 05–RNTL 028 SIMPA2-C6E2 project (Conception des SYStèmes Electriques Embarqués) and the FP6 European DRESS project (Distributed and Redundant Electro-mechanical nose gear Steering System).

APPENDIX: SCALING LAW BASICS

The scaling laws, also called similarity laws, are an efficient way to study the effect of varying representative parameters of a given component. They are used in various domains such as micro-systems, mechanics, hydraulics and fluid mechanics to compare different technologies, to adapt the dimensions of a mock-up in fluid dynamics, to size mechanical, hydraulic or electrical systems, to develop and rationalize product families or to evaluate costs [15,19,20]. In some cases, it is difficult or impossible to identify and write the equations linking the parameters representative of a given overall problem in a simple way. In these particular cases, an alternate solution can be found in by carrying out a dimensional analysis to establish the scaling laws [36,37].

Notation

This article uses the notation proposed by M. Jufer in [15]. The l^* scaling ratio of a given parameter is calculated as

$$l^* = l/l'$$

where *l'* is the dimensional parameter taken as the reference and *l* is the dimensional parameter under study.

For example, the variation of the volume of a shaft (cylinder) in case of an identical variation for all geometrical dimensions is

$$V^* = \frac{V}{V'} = \frac{\pi r^2 l}{\pi r'^2 l'} = r^{*2} l^*$$

where *V* is the volume of the shaft, *l* its length and *r* its radius. The parameters under study are differentiated from the references by a prime symbol.

Geometrical similitude

Models have been developed with geometrical similitude in this paper. Widely applied, the hypothesis of homothetic scaling for all the geometrical dimensions leads them to be related to all to their reference values by a single scaling ratio. For the cylinder example, this assumption gives:

$$r^* = l^* \Rightarrow V^* = l^{*3}$$

This result remains valid for any other geometry. In the same way, it is possible to calculate the variation of the mass, *M*, and rotational moment of inertia, *J*, of the shaft:

$$\begin{cases} M = \int \rho_m dV \Rightarrow M^* = l^{*3} \\ J = \int r^2 dM \Rightarrow J^* = l^{*5} \end{cases}$$

where ρ_m is the mass density of the shaft.

Reference use

When the characteristics of a reference component are known, it is possible to determine the new characteristics for a given change of parameter. For example:

$$M = M_{ref} \cdot \left(\frac{l}{l_{ref}} \right)^3 \text{ and } J = J_{ref} \cdot \left(\frac{l}{l_{ref}} \right)^5$$

REFERENCES

1 INCOSE, Systems engineering handbook, INCOSE Technical Product, 2004.

2 L. Han, C. J. J. Paredis, and P. K. Khosla, "Object-Oriented Libraries of Physical Components in Simulation and Design", in 2001 Summer Computer Simulation Conference, Orlando, FL, 2001, pp. 1-8.

3 G. Ferretti, G. Magnani, and P. Rocco, "Virtual prototyping of mechatronic systems", Annual Reviews in Control, vol. 28, pp. 193-206, 2004.

4 H. J. Coelingh, "Design support for motion control systems", University of Twente, Enschede, The Netherlands, 2000, pp. xii-218.

5 C. J. J. Paredis, A. Diaz-Calderon, R. Sinha, and P. K. Khosla, "Composable Models for Simulation-Based Design", Engineering with Computers, vol. 17, pp. 112-128, 2001.

6 F. Roos, "Towards a methodology for integrated design of mechatronic servo systems", KTH, Machine Design, 2007, pp. viii-203.

7 J. van Amerongen and P. Breedveld, "Modelling of physical systems for the design and control of mechatronic systems", Annual Reviews in Control, vol. 27, pp. 87-117, 2003.

8 R. Sinha, C. J. J. Paredis, V.-C. Liang, and P. K. Khosla, "Modeling and Simulation Methods for Design of Engineering Systems," Journal of Computing and Information Science in Engineering, vol. 1, pp. 84-91, 2001.

9 Y. L. Tian, Y. H. Yan, R. M. Parkin, and M. R. Jackson, "Development of a Visualized Modeling and Simulation Environment for Multi-domain Physical Systems," in Global Design to Gain a Competitive Edge: Springer London, 2008, pp. 469-478.

10 J. A. Estefan, "Survey of Model-Based Systems Engineering (MBSE)", INCOSE MBSE Focus Group, May 2007.

11 J. N. Martin, "Systems Engineering Guidebook: A process for Developing Systems and Products", CRC Press, Inc. : Boca Raton, FL, 1996.

12 P. Krus, "Performance Estimation Using Similarity Models and Design Information Entropy", Workshop on Performance Prediction in System-Level Design, International Design Engineering Technical Conference and Computers and Information in Engineering Conference (IDETC/CIE) , Aug. 3 2008.

13 ControlEng, ServoSoft software, www.controleng.ca.

14 T. Simpson, J. Peplinski, P. Koch and J. Allen, "Metamodels for Computer-Based Engineering Design: Survey and Recommendations", Engineering with Computers, Vol. 17, pp. 129-150, 2001.

15 M. Jufer, "Design and Losses - Scaling Law Approach", in Nordic Research Symposium Energy Efficient Electric Motors and Drives, Skagen, Denmark, 1996, pp. 21-25.
16 G. Ricci, "Mass and rated characteristics of planetary gear reduction units," Meccanica, vol. 27, pp. 35-45, 1992.
17 G. Ricci, "Weight and rated characteristics of machines: positive displacement pumps, motors and gear sets", Mechanism and Machine Theory, vol. 18, 1983, pp. 1-6.
18 K. J. Waldron, Ch. Hubert, “Scaling of robotic mechanisms”, IEEE International Conference on Robotics & Automation, San Fransisco, CA, April 2000.
19 B. Multon, H. Ben Ahmed, M. Ruellan, and G. Robin, "Comparaison du couple massique de diverses architectures de machines tournantes synchrones à aimants", Société de l'Electricité, de l'Electronique et des Technologies de l'Information et de la Communication (SEE), pp. 85-93, 2006.
20 G. Pahl, W. Beitz, L. Blessing, J. Feldhusen, K.-H. Grote, and K. Wallace, “Engineering Design: A Systematic Approach”, London: Springer-Verlag London Limited, 2007.
21 S. E. Mattsson, H. Elmqvist, M. Otter, “Physical system modeling with Modelica”, Control Engineering Practice 6 (1998) pp 501-510.
22 Modelica Association, “Modelica Modelica Specification”, version 3.2, march 24, 2010, www.modelica.org/documents
23 Dassault Systemes - Dynasim AB, "Dymola - Dynamic Modeling Laboratory", 2008, www.dynasim.se
24 J. Bals, G. Hofer, A. Pfeiffer, and C. Schallert, "Object-Oriented Inverse Modelling of Multi-Domain Aircraft Equipment Systems and Assessment with Modelica", 3rd International Modelica Conference, Linköping, Sweden, 2003, pp. 377-384.
25 D. J. Murray-Smith, "The inverse simulation approach: a focused review of methods and applications," Mathematics and Computers in Simulation, vol. 53, pp. 239-247, 2000.
26 VSI, “Design methodology for mechatronic systems”, VDI-Richtlinien. Düsseldorf.
27 R. Fotsu Ngwompo, S. Scavarda, D. Thomasser, “Inversion of linear time-invariant SISO systems modelled by bond graph”, J. Franklin Inst. Vol. 333(b), N0 2, pp 157-174, 1996.
28 J. Liscouët, M. Budinger, and J.-C. Maré, “Design for Reliability of Electromechanical Actuators”, Recent Advances in Aerospace Actuation Systems and Components, May 5-7 2010, Toulouse, France.
29 T. El Halabi, M. Budinger and J.-C. Maré, “Optimal geometrical integration of electromechanical actuators”, Recent Advances in Aerospace Actuation Systems and Components, May 5-7 2010, Toulouse, France.
30 SKF, "Catalogue technique interactif," On line ed, SKF, Ed., 2009, www.skf.com.
31 SKF, "Vis à rouleaux," SKF, Ed., 2008, www.skfequipements.skf.fr.
32 Bosch Rexroth, "Precision ball screw assemblies," R. B. Group, Ed., 2008, www.boschrexroth-us.com.
33 R. Budynas and J. K. Nisbett, Shigley's Mechanical Engineering Design, SI version. New York: McGraw-Hill, 2007.
34 J.Ch. Maré, “System level modelling of mechanical losses in actuators”, Proceedings of the 20th International Conference on Hydraulics and Pneumatics, Prague, Sept 29 - Oct 1, 2008.
35 T. Ford, "More-electric aircraft," Aircraft Engineering and Aerospace Technology, vol. 77, 02-2005 2005.
36 G. I. Barenblatt, “Scaling”, Cambridge University Press, 2003.
37 E. S. Taylor, “Dimensional Analysis for Engineers”, Oxford University Press, 1974.