HAL
open science

ON THE IMPACT ON A PLATE MADE OF HYPERELASTIC FOAM

H. Altenbach, V. A. Eremeyev, M. M. Levdokymov

To cite this version:

H. Altenbach, V. A. Eremeyev, M. M. Levdokymov. ON THE IMPACT ON A PLATE MADE OF HYPERELASTIC FOAM. Proceedings of the 3rd International Conference on Nonlinear Dynamics, Sep 2010, Kharkov, Ukraine. hal-00830834

HAL Id: hal-00830834

https://hal.science/hal-00830834v1

Submitted on 5 Jun 2013

HAL is a multi-disciplinary open access archive for the deposit and dissemination of scientific research documents, whether they are published or not. The documents may come from teaching and research institutions in France or abroad, or from public or private research centers.

L'archive ouverte pluridisciplinaire **HAL**, est destinée au dépôt et à la diffusion de documents scientifiques de niveau recherche, publiés ou non, émanant des établissements d'enseignement et de recherche français ou étrangers, des laboratoires publics ou privés.

ON THE IMPACT ON A PLATE MADE OF HYPERELASTIC FOAM

H. Altenbach[1]
V. A. Eremeyev
M. M. Ievdokymov
Martin-Luther-University
Halle-Wittenberg
Halle, Germany

ABSTRACT

In the paper we present the results of the finite element modelling of an axisymmetric and non-axisymmetric impact on a circular thick plate made of hyperelastic foam. The nonlinear oscillations and the transient wave's propagation after impact are considered. The finite element analysis is performed using the ANSYS package. Large deformations are taking into account, i.e. the strains attain the level of 600%.

INTRODUCTION

Foams are very perspective type of composite materials applied in civil engineering, automotive and space industries [1, 2]. Polymer foams may demonstrate very large elastic strains. Hence, such foam may be considered as a non-linear hyperelastic material. Different models allowing the description of large hyperelastic strains of foams are proposed in the literature.

The existing models of foams may be classified as follows. The first type of models bases on the detailed considerations of the foam cell deformation taking into account the cell structure, the properties of cell walls and struts, the pressure change in the closed cells, etc., see [1-4] among others. The famous Kelvin model belongs to this type. On the other hand the computational efforts may be significant and there is hard to establish experimentally the real material properties of cells. The second class of models uses the description of foam as the continuum with averaged properties. Within the framework of this type models, one takes into account the structure of the foam cells, the solid material, the gas properties and other parameters in the constitutive equations at whole. The Ogden's material model is applied for the finite strains of hyperelastic foams.

Both types of models of hyperelastic foams have advantages and disadvantages. Further we apply the second approach using the Ogden's material model of hyperelastic material for moderate large strains and low level of stress field. We investigate the impact on a clamped circular plate made of hyperelastic foam using the Ogden's material model, see [2] and [5-7]. For some special choice of the material constants, Ogden's strain function W reduces to other well-known models applied in the nonlinear elasticity (neo-Hookean, Varga, Mooney-Rivlin, Blatz-Ko, etc.). By this way the behaviour of incompressible and compressible elastic materials under finite strain and, in particular, for the high compressive soft foams can be presented. The model is implemented in various finite elements packages like ANSYS, ABAQUS, MSC Marc., etc.

There are many plate-like engineering structures made of foams, for example sandwich plates with a core made of foam, laminates, etc., see [1,2] for details. The variant of the linear theory of plates made of foams summarized in [8].

The paper is organized as follows. In Sect. 1 we recall the basic equation of the three-dimensional theory of nonlinear elasticity. Further in Sect. 2 we present the numerical results. Applying the

[1] Corresponding author. Email holm.altenbach@iw.uni-halle.de (Prof. Dr.-Ing. Holm Altenbach)

implementation in ANSYS we start the investigation with the static axisymmetric contact problem describing the indentation of a smooth rigid ball in a thick plate. The dependence of the plate deflection on the force is obtained. We also analyze the case of non-axisymmetric loading. Then we discuss the impact, i.e. the case when the ball moves with finite velocity. We consider transient waves and nonlinear oscillations of the after impact.

1. BASIC EQUATIONS OF 3D NON-LINEAR ELASTICITY

Following [7] in this section we present the general equations governing a finite homogeneous deformation in a compressible elastic material. The Eulerian equilibrium equations of the non-linear body are given by the relations

$$\operatorname{div} \boldsymbol{\tau} + \rho \mathbf{f} = \rho \ddot{\mathbf{r}}, \quad \boldsymbol{\tau} = J^{-1}\mathbf{F}\cdot\mathbf{S}, \quad \mathbf{S} = \frac{\partial W}{\partial \mathbf{F}}, \tag{1}$$

where div is the divergence operator in the actual configuration χ, $\boldsymbol{\tau}$ the Cauchy stress tensor, $\mathbf{S}$ the 1st Piola-Kirchhoff stress tensor, ρ the material density in the actual configuration, $\mathbf{r}$ the position vector in the actual configuration, $\mathbf{f}$ the body force vector per unit mass, W the strain-energy function (per unit volume), $J = \det \mathbf{F}$, and $\mathbf{F} = G\mathit{rad}\ \mathbf{r}$ is the deformation gradient defined as in [7]. Note that here we use the notation $\mathbf{A}\cdot\mathbf{a}$ and $\mathbf{A}\cdot\mathbf{B}$ for the second-order tensors $\mathbf{A}$ and $\mathbf{B}$, and a vector a instead of the alternative way $\mathbf{Aa}$, and $\mathbf{AB}$, respectively. Further we assume the isotropic behaviour of the material, so we use the constitutive equation in the following form:

$$W = W(I_1, I_2, I_3) \tag{2}$$

where I_1, I_2, I_3 are the principal invariants of the left Cauchy-Green deformation tensor $\mathbf{b} = \mathbf{F}\cdot\mathbf{F}^{\mathrm{T}}$ or the right Cauchy-Green deformation tensor $\mathbf{c} = \mathbf{F}^{\mathrm{T}}\cdot\mathbf{F}$, defined by

$$\begin{aligned}
I_1 &= \operatorname{tr}\mathbf{b} = \operatorname{tr}\mathbf{c} &&= \lambda_1^2 + \lambda_2^2 + \lambda_3^2 \\
I_2 &= \frac{1}{2}[\operatorname{tr}^2\mathbf{b} - \operatorname{tr}\mathbf{b}^2] = \frac{1}{2}[\operatorname{tr}^2\mathbf{c} - \operatorname{tr}\mathbf{c}^2] &&= \lambda_1^2\lambda_2^2 + \lambda_2^2\lambda_3^2 + \lambda_1^2\lambda_3^2 \\
I_3 &= \det\mathbf{b} = \det\mathbf{c} &&= \lambda_1^2\lambda_2^2\lambda_3^2
\end{aligned}$$

Here λ_1, λ_2, λ_3 are the principal stretches, tr denotes the trace of a second-order tensor, and $(\ldots)^{\mathrm{T}}$ denotes transposed. λ_1, λ_2, λ_3 may be also considered as the arguments of the strain function W:

$$W = W(\lambda_1, \lambda_2, \lambda_3)$$

For the isotropic material $\mathbf{S}$ and $\boldsymbol{\tau}$ are given by the relations

$$\begin{aligned}
\mathbf{S} &= 2\frac{\partial W}{\partial \mathbf{c}}\cdot\mathbf{F}^{\mathrm{T}} &&= (f_0\mathbf{c}^{-1} + f_1\mathbf{I} + f_2\mathbf{c})\cdot\mathbf{F}^{\mathrm{T}} \\
\boldsymbol{\tau} &= J^{-1}\mathbf{F}\cdot\mathbf{S} &&= f_0\mathbf{I} + f_1\mathbf{b} + f_2\mathbf{b}^2
\end{aligned} \tag{3}$$

where $\mathbf{I}$ is the unit second-order tensor, f_0, f_1, f_2 are functions which may be expressed as combinations of the partial derivatives of W with respect to I_i or λ_i, see [7,9] for details.

For the description of the non-linear behaviour of polymeric foams the following constitutive equation is widely used [2]

$$
\begin{aligned}
W &= \sum_{i=1}^{N} \frac{2\mu_i}{\alpha_i^2}\left[\operatorname{tr}\mathbf{b}^{\alpha_i/2} - 3 + \frac{1}{\beta_i}\left(\det \mathbf{F}^{-\alpha_i}\beta_i - 1 \right)\right] \\
&= \sum_{i=1}^{N} \frac{2\mu_i}{\alpha_i^2}\left[\lambda_1^{\alpha_i} + \lambda_2^{\alpha_i} + \lambda_3^{\alpha_i} - 3 + \frac{1}{\beta_i}\left(J^{-\alpha_i}\beta_i - 1 \right)\right]
\end{aligned}
\tag{4}
$$

where μ_i, α_i, β_i are the elastic moduli ($i = 1 \ldots N$). Here

$$\mu = \sum_{i=1}^{N} \mu_i$$

denotes the initial shear modulus, while the initial bulk modulus k is given by

$$k = \sum_{i=1}^{N} 2\mu_i \left(\beta_i + \frac{1}{3} \right)$$

The model (4) was originally proposed by Ogden [5,6], see also [2,7] among others, where Ogden's model is used. For some special choice of the values μ_i, α_i, β_i and N, Ogden's strain function W reduces to various others models applied in the nonlinear elasticity (neo-Hookean, Varga, Mooney-Rivlin, Blatz-Ko constitutive equations, etc.).

2. NUMERICAL EXAMPLES

As an example we present the finite element analysis (FEA) for thick plate made of foam under the impact. The geometrical model consists of two parts – the plate and the indented rigid ball. The 20-nodes quadratic element SOLID186 is used. The FE model includes 2000 elements and 11000 nodes. Two types of loading are considered – the axisymmetric and non-axisymmetric ones. In both cases clamped boundary conditions on the lateral surface are assumed. Impact is simulated as a short-time contact with the ball. The contact problem is solved with the help the augmented Lagrange method. Free vibrations after impact are investigated numerically. For calculations the Newton-Raphson iterative method is used. During the solution 33000 equations are solved in each step. We used the following set of the Ogden's material constants:

$$\mu_1 = 1{,}85 \cdot 10^6 \text{ Pa},\ \mu_2 = -9{,}2 \cdot 10^6 \text{ Pa},\ \alpha_1 = 4{,}5,\ \alpha_2 = -4{,}5,\ \beta_1 = 0{,}92,\ \beta_2 = 0{,}92$$

The friction coefficient in the case of rubber-steel contact is assumed to be $\zeta = 0{,}2$.

The transient analyses are made for both plates with symmetrical and unsymmetrical impact cases (Fig. 1).

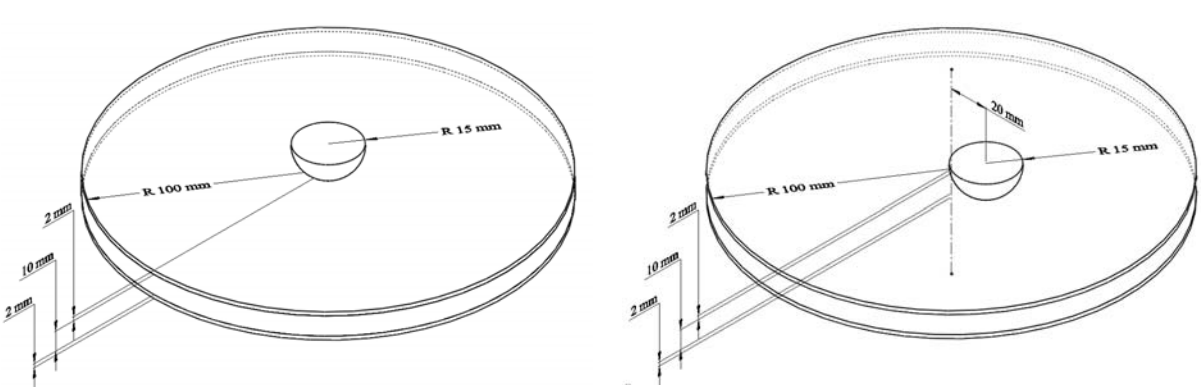

Fig. 1 Geometrical models. Axisymmetric problem (on the left) and the non-axisymmetric problem (on the right)

Numerical calculations were made with the use of program package ANSYS. The mesh of thick plates presented in Fig. 2.

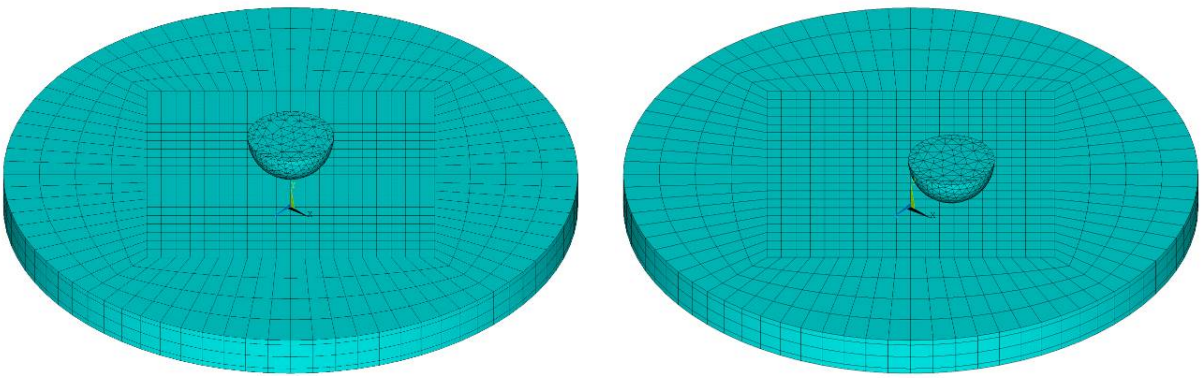

Fig. 2 Finite element mesh for layered plate for symmetrical and unsymmetrical load case

All geometrical models include two parts – the plate and the indented rigid ball. The 20-nodes quadratic element SOLID186 is used. The FE model includes 2000 elements and 11000 nodes. Two types of loading are considered - the axisymmetric and non-axisymmetric ones. In both cases clamped boundary conditions are used. Impact is simulated as a short-time contact with the ball. The contact problem is solved with the help the augmented Lagrange method. Free vibrations after impact are investigated numerically. For calculations the Newton-Raphson iterative method is used. During the solution 33000 equations are solved in each step.

The same model, but different material constants are using for inner and outer layers. We introduce the following set of the Ogden's material constants for inner layer:

$$\mu_{in1} = 1{,}85 \cdot 10^6 \text{ Pa},\ \mu_{in2} = -9{,}2 \cdot 10^6 \text{ Pa},\ \alpha_{in1} = 4{,}5,\ \alpha_{in2} = -4{,}5,\ \beta_{in1} = 0{,}92,\ \beta_{in2} = 0{,}92$$

for outer layer:

$$\mu_{out1} = 1{,}85 \cdot 10^6 \text{ Pa},\ \mu_{out2} = -9{,}2 \cdot 10^6 \text{ Pa},\ \alpha_{out1} = 4{,}5,\ \alpha_{out2} = -4{,}5,\ \beta_{out1} = 0{,}92,\ \beta_{out2} = 0{,}92$$

The friction coefficient in the case of rubber-steel contact is assumed to be $\zeta = 0{,}2$.

The plate is fixed along lateral surface. Free vibrations of plate after impact by spherical indenter have calculated. Initial conditions applied with the using of three load intervals with different action time. 600% deflection of plate has reached during loading.

As the results displacement fields were obtained for both loading cases in dependence on time. The graph of displacement 0Y versus time at the central plate's point is presented in Fig. 3.

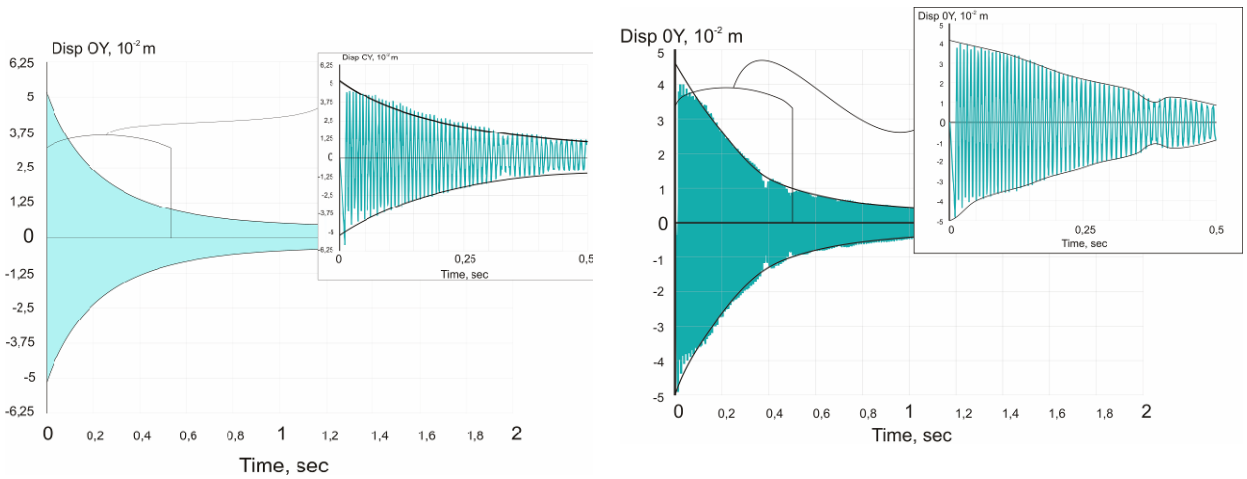

Fig. 3 Deflections.
Axisymmetric impact (on the left) and non-axisymmetric impact (on the right)

Displacement fields have calculated for plates with symmetrical and unsymmetrical loading cases and are illustrated for different time values in fig.4.

CONCLUSIONS

We present the results of numerical calculations of the dynamic behaviour of the thick plate made of hyperelastic foam. For numerical calculations Ogden's material model which implemented in ANSYS is used. The model can decribe the large deformations of compresible materials, for example, 500-700% in the tensile tests. Two circular plates are considered. The first one made of homogeneous material while the second one has the sandwich structure. The faces are made of rubber-like material, while the core is made of foam. The impact is modelled by the short action of rigid steel ball and the the nonlinear oscilations are investigated. The friction between the ball and plate is taken into account.

ACKNOWLEDGEMENT

The work was supported by the DFG grant No. 341/33-1 (second author) and PhD scholarship of the state Sachsen-Anhalt (third author).

REFERENCES

[1] Gibson L.J., Ashby M.F. *Cellular Solids: Structure and Properties*, 2nd Edition, Cambridge Solid State Science Series, Cambridge University Press, Cambridge, 1997.

[2] Mills N. *Polymer Foams Handbook. Engineering and Biomechanics Applications and Design Guide*, Butterworth-Heinemann, Amsterdam, 2007.

[3] Mills N.J. The high strain mechanical response of the wet Kelvin model for open-cell foams, *International Journal of Solids and Structures*, Vol. 44, pp. 51-65, 2007.

[4] Mills N.J., Stämpfli R., Marone F., Brühwiler P.A. Finite element micromechanics model of impact compression of closed-cell polymer foams, *International Journal of Solids and Structures*, Vol. 46, pp. 677-697, 2009.

[5] Ogden R.W. Large deformation isotropic elasticity - on the correlation of theory and experiment for incompressible rubberlike solids, *Proc. Roy. Soc. London*, Vol. A 326, pp. 565-584, 1972.

[6] Ogden R.W. Volume changes associated with the deformation of rubber-like solids, *Journal of the Mechanics and Physics of Solids*, Vol. 24, pp. 323-338, 1976.

[7] Ogden R.W. *Non-Linear Elastic Deformations*, Dover Publications, New York, 1997.

[8] Altenbach H., Eremeyev V.A. Thin-walled structures made of foams, in: H. Altenbach and A. Öchsner (Ed.), *Cellular and Porous Materials: Modeling - Testing - Application, CISM Courses and Lecture Notes No. 521*, Springer, Wien, 2010, pp. 167-242.

[9] Lurie A.I. *Nonlinear Theory of Elasticity*, North-Holland, Amsterdam, 1990.

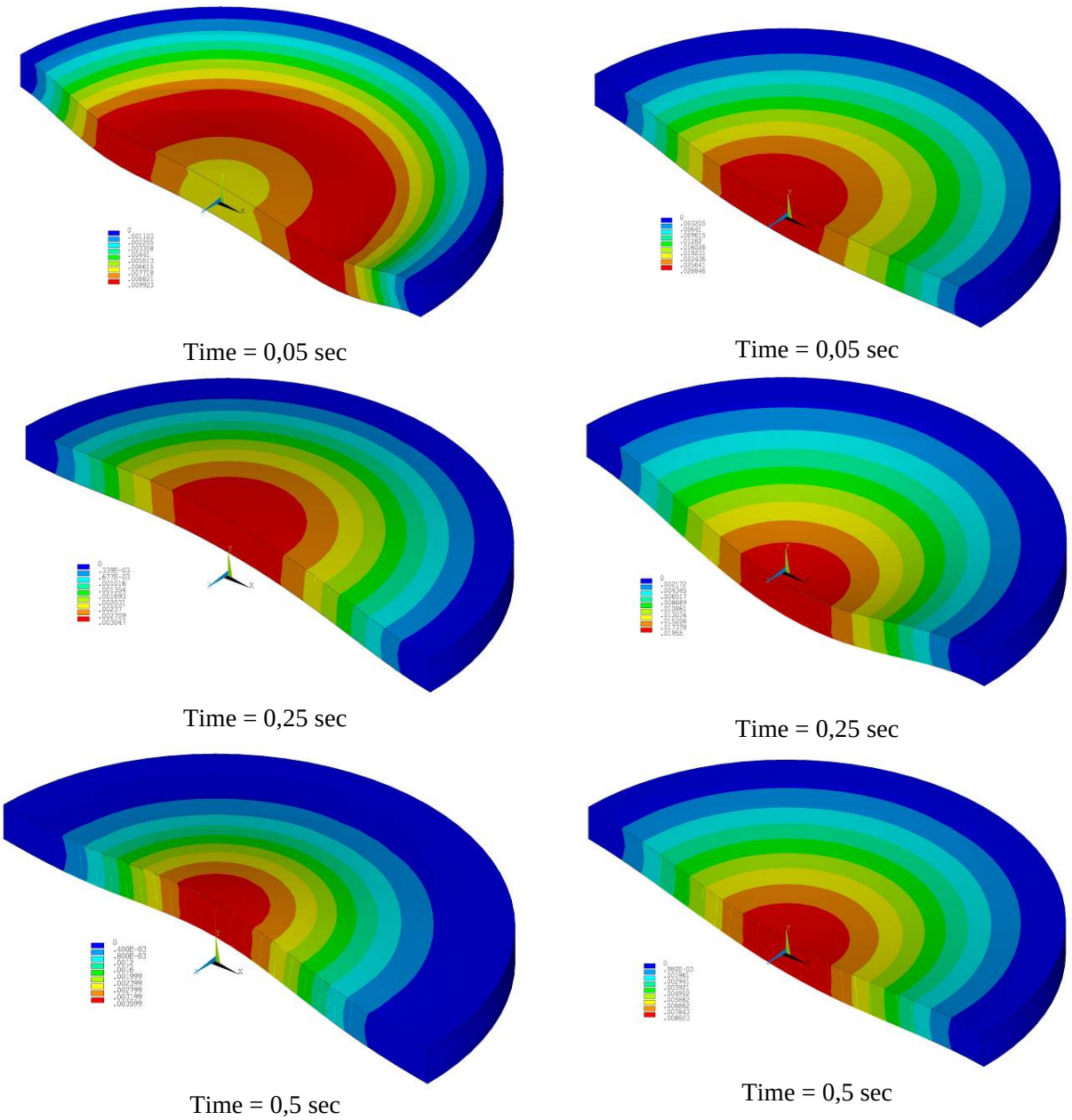

Fig. 4 Displacement magnitudes