HAL
open science

A real-time acoustic violin emulator for electric violins

Patrick Gaydecki

To cite this version:

Patrick Gaydecki. A real-time acoustic violin emulator for electric violins. Acoustics 2012, Apr 2012, Nantes, France. hal-00810691

HAL Id: hal-00810691

https://hal.science/hal-00810691v1

Submitted on 23 Apr 2012

HAL is a multi-disciplinary open access archive for the deposit and dissemination of scientific research documents, whether they are published or not. The documents may come from teaching and research institutions in France or abroad, or from public or private research centers.

L'archive ouverte pluridisciplinaire **HAL**, est destinée au dépôt et à la diffusion de documents scientifiques de niveau recherche, publiés ou non, émanant des établissements d'enseignement et de recherche français ou étrangers, des laboratoires publics ou privés.

A real-time acoustic violin emulator for electric violins

P. Gaydecki

University of Manchester, School of Electrical and Electronic Engineering, Sackville Street Building, M13 9PL Manchester, UK
patrick.gaydecki@manchester.ac.uk

A stand-alone electronic device has been developed that processes the raw electrical output produced by an electric violin, generating an output signal which, when fed to an amplifier, produces a sound that approximates closely the timbre of an acoustic or wooden instrument. The system comprises a high-impedance preamplifier, a 24-bit sigma delta codec and a digital signal processor (DSP) operating at 600 million multiplications-accumulations per second (MMACs). The device holds in its memory the far-field impulse response of a wooden instrument; this is convolved in real-time with the input signal to produce the modified output signal. The unprocessed output produced by an electric violin is typically a saw-tooth waveform, which results from the slip-stick regime created under normal bowing. Similarly, such a waveform is also manifest on the bridge of acoustic violins and for this reason the system may also be used with wooden instruments fitted with pickups mounted on the bridge. The device incorporates a standard line-output for connection to audio amplifiers and an additional headphone driver for silent practice. Other features include adjustable gain, a parametric equalizer and a facility that enables the user to download and store additional impulse responses in non-volatile memory.

1 Introduction

In the field of signal processing, it is well established that a linear system has unique and repeatable characteristics, and that, by using an operation termed convolution, its response to any input signal can be predicted if its response to a unit impulse excitation signal is also known. Thus if $h(t)$ represents the linear system's impulse response and $x(t)$ and $y(t)$ denote respectively the input and output signals, the fundamental convolution relationship is given by

$$y(t) = \int_{-\infty}^{\infty} h(\tau)x(t-\tau)d\tau \qquad (1)$$

For discrete systems, in which the impulse response is both time limited and causal, the equivalent convolution operation is expressed as:

$$y[n] = \sum_{k=0}^{M} h[k]x[n-k] \qquad (2)$$

It is important to emphasize that a system's behaviour may only be predicted using the above operation if it conforms to the laws of linearity. These may be briefly summarized as follows:

- Temporal and spatial invariance. The behaviour of a linear system does not change over time, nor is it dependent upon its position in space.
- Proportionality. If an input to a linear system produces a given output, then a weighted input will generate a similarly weighted output.
- Uniqueness. A linear system always produces a unique output in response to a unique input.
- Superposition. If a set of unique inputs are summed and then applied to the system, the response will be the sum, or superposition, of the unique outputs.
- Frequency preservation. The output signal produced by a linear system can only contain those frequencies present in the input signal. In other words, it cannot synthesize new frequencies. It can only modify the amplitude and phase of any frequencies present in the input.

From the above laws, the input/output signal relationship of a (discrete) linear system is encapsulated by the equation

$$\sum_{k=0}^{\infty} a_k x_k[n] \rightarrow h[n] \rightarrow \sum_{k=0}^{\infty} a_k y_k[n] \qquad (3)$$

2 The violin as a linear system

The body of a violin is, to a very close level of approximation, a linear system. Although its properties do alter over time (As the wood, varnish and adhesives age), these changes only become significant over years. Within any reasonable time frame, the body manifests the property of temporal invariance. Hence if the body is tapped at a particular position using an instrumented hammer, the sound that it produces will always retain the same spectral characteristics (although the amplitude may vary, depending on the strength of the strike). Non-linearities are often introduced during performance, but these are player-dependent and confined to manner in which the bow moves over the string, not the body. Although the near-field impulse response is spatially variable, in the far-field these variations are less significant; it the far-field which is of interest in this case.

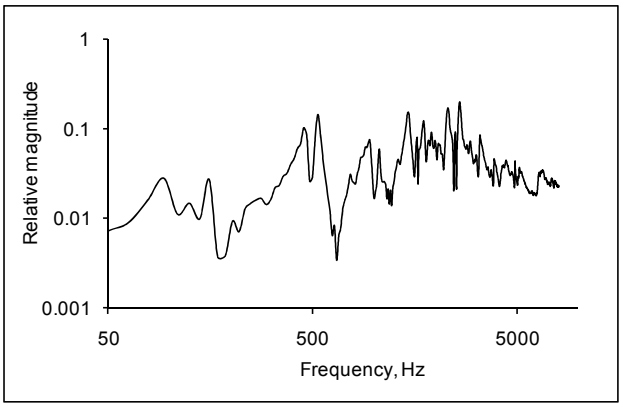

Figure 1. Violin body frequency response.

The characterization of a violin body as a linear system is pivotal since it allows the vibration behaviour to be characterized by the standard methods of linear acoustics, as has been explored by many researchers [1, 2, 3]. The most extensive attempts to date to use the linear model to explore the resonance characteristics of real stringed instruments have been conducted by Jansson and Dünnwald [4, 5, 6]. Dünnwald measured resonance characteristics of about 700 violins and found that certain resonance features (such as the presence of strong resonances in the region 190-650 Hz and 1300-4200 Hz relative to resonances in the regions 650-1300 Hz and 4200-6500 Hz) were characteristic of 'Old Italian' instruments; he concluded that these features were significant in determining the acceptability of violin sounds, but conducted no empirical

research to explore or support the perceptual validity of this claim.

When performing on stage, violinists often use a microphone to amplify the sound from the violin; this has its disadvantages. The voice of the instrument is often not reproduced with fidelity since the microphone is in the near-field radiation zone of the transfer function. Additionally, interference is often introduced. From a pragmatic perspective, acoustic instruments are often very expensive – a typical Stradivarius will cost upwards of $5M.

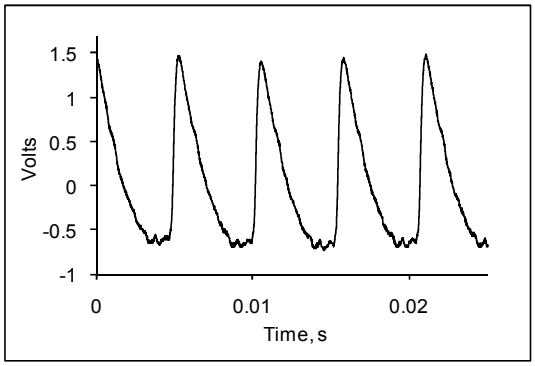

Figure 2. Force signal on bridge of violin.

For this reason, touring musicians, especially those who perform in bands, often resort to the use of an electric violin. They are cheap, robust and produce a reasonable sound. However, since they have no body, the voice of such instruments is quite unlike (and inferior) to that of a wooden equivalent. Our research indicates that violinists would be eager to use a digital system that would effectively convert the sound from an electric instrument to that of a wooden equivalent.

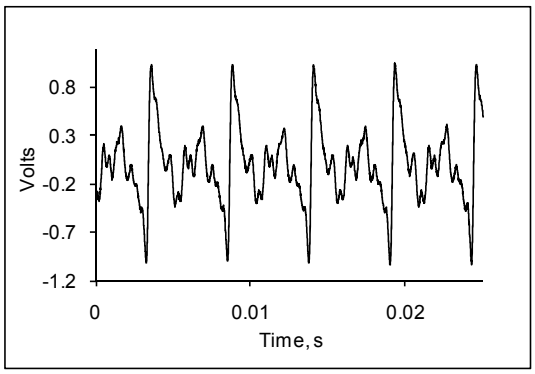

Figure 2. Force signal on bridge of violin mediated by body frequency response.

3 Impulse and Frequency response characterization

Regardless of the quality of the violin, when the bow is drawn across a string, it sticks to the hairs on the bow and is displaced. A single kink in the string travels towards the neck, is reflected, and as it passes under the bow on its return to the bridge it causes the string to slip back. The string action was first described by Helmholtz and is therefore called a Helmholtz wave. As a result of this slip-stick action, the force acting on the bridge is a simple saw tooth, which, when heard in isolation, has an unpleasant nasal quality. However, this waveform and its associated frequency response are mediated by the impulse / frequency responses of the bridge and body before being transmitted through the air; it is the contribution of these components that is responsible for bestowing to the violin its characteristic voice.

An approximate violin bridge/body impulse response can be obtained by tapping the bridge with a small instrumented hammer and using a microphone and an ADC to record the signal. This impulse response is then processed with an FFT algorithm to obtain the frequency response. A typical violin body frequency response is shown in Figure 1. The force signal from just a string may be obtained using miniature accelerometers mounted on the bridge; a typical signal is shown in Figure 2. This is then processed digitally with the bridge/body filter to synthesize a convincing violin sound; the resulting waveform appears in Figure 3 [7]. An accurate measurement of the impulse response is technically challenging, and many publications have discussed this subject [8, 9].

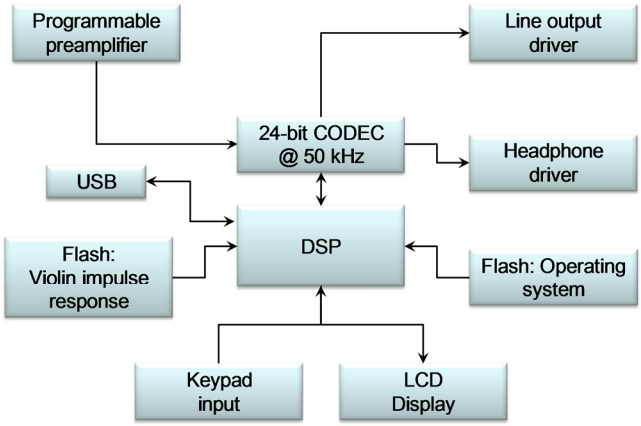

Figure 4. Principle components of DSP-based violin body response emulator.

4 Digital reproduction of the impulse response

Impulse response characterization has important implications for electronic music and instruments. Electric violins, for example, generally have no body, so in simple systems the sound produced is merely the amplified raw saw tooth. By feeding this into a DSP system programmed with the acoustic bridge/body impulse response, it is possible, in principle, for the electric violin to approximate the sound of acoustic counterpart at minimal cost. A hardware system has been designed to perform this operation in real time and is shown in schematic form in Figure 4. The output from the string pickup (normally a piezo-electric transducer) is fed to a high-impedance amplifier and then to the analogue-to-digital converter section of a 24-bit codec sampling at 50 kHz. The output from the codec is then fed to the DSP device, a Freescale DSP56321 [11], which convolves the string signal with a body impulse response stored in its memory. The result of this operation, the output signal, is fed back to the digital-to-analogue section of the codec and from there to appropriate buffers to drive both high power audio amplifiers and headphones. Other sub-systems include a

display, keypad and interface to allow the unit to be connected to and programmed by a computer. The final device is shown in Figure 5.

Figure 5. Violin body response emulator hardware.

5 Speed requirements

Convolution of signal with a long-duration impulse response is a compute-intensive operation. In the case of signals sampled within the audio band, it places a severe constraint on the specifications of the DSP device which is selected to perform the task. In this case, for example, the impulse response lasts for 0.25 s. As stated above, the sample rate is 50 kHz. The number of coefficients in the convolution kernel, the impulse response, is therefore 12500. With reference to Equation (2) therefore, the processor must perform 12500 × 50000 = 625 × 106 multiplications and additions per second (MMACs), or 625 MMACs. Modern DSP devices achieve such speeds with the use of Harvard architecture, hardware multipliers and enhanced filter coprocessors, which are optimized to perform high-speed multiplications and accumulations. Typically, such systems perform convolution at close to or equal 100% efficiency (i.e. one MMAC per clock cycle).

6 Conclusion

A prototype system has been described that is intended to approximate, in real-time, the far-field impulse and frequency response of an acoustic (wooden) violin. It comprises a high-speed DSP core and codec in combination with software that convolves the incoming signal with a measured far-field radiative response.

References

[1] L. Cremer, The physics of the violin: MIT Press, Cambridge, Mass. (1985)

[2] K. D. Marshall, Modal analysis of a violin: *J. Acoust. Soc. Amer.* **77**, 695–709 (1985)

[3] C. M. Hutchins, Research papers in violin acoustics 1975–1993: *Acoustical Society of America*, Woodbury NY. (1997)

[4] E. Jansson, B. Niewczyk, On the acoustics of the violin: bridge or body hill: *CAS Journal* Series 2, **3**, 23-27 (1999)

[5] E. Jansson, Admittance measurements of 25 high quality violins: *Acustica - Acta Acustica* **83**, 337–341 (1997)

[6] H. Dünnwald, Deduction of objective quality parameters on old and new violins: *J. Catgut Acoust. Soc.* Series 2, **1**, 1–5 (1991)

[7] P. Gaydecki J. Woodhouse I. Cross, Advances in audio signal enhancement and stringed instrument emulation using real-time DSP Proc. Forum Acusticum Sevilla 2002 (on CD; ISBN: 84-87985-06-8) (2002)

[8] P. Cook, D.Trueman, A database of measured musical instrument body radiation impulse responses, and computer applications for exploring and utilizing the measured filter functions, Proc. Int. Symp. Musical Acoust. (Acoustical Society of America, Woodbury, NY), 303–308 (1998)

[9] C. Fritz, I. Cross, B. Moore, J. Woodhouse, Perceptual thresholds for detecting modifications applied to the acoustical properties of a violin, *J. Acoust. Soc. Am.* **122**, 3640–3650 (2007)

[10] www.freescale.com