HAL
open science

# Concentrated Spectrogram of audio acoustic signals - a comparative study

Krzysztof Czarnecki, Marek Moszyński, Miroslaw Rojewski

## To cite this version:

Krzysztof Czarnecki, Marek Moszyński, Miroslaw Rojewski. Concentrated Spectrogram of audio acoustic signals - a comparative study. Acoustics 2012, Apr 2012, Nantes, France. hal-00810604

**HAL Id: hal-00810604**

**https://hal.science/hal-00810604v1**

Submitted on 23 Apr 2012

**HAL** is a multi-disciplinary open access archive for the deposit and dissemination of scientific research documents, whether they are published or not. The documents may come from teaching and research institutions in France or abroad, or from public or private research centers.

L'archive ouverte pluridisciplinaire **HAL**, est destinée au dépôt et à la diffusion de documents scientifiques de niveau recherche, publiés ou non, émanant des établissements d'enseignement et de recherche français ou étrangers, des laboratoires publics ou privés.

# Concentrated Spectrogram of audio acoustic signals - a comparative study

K. Czarnecki, M. Moszyński and M. Rojewski

Gdansk University of Technology, 11/12 Gabriela Narutowicza Street, 80-233 Gdańsk, Poland
krzycz@eti.pg.gda.pl

The paper presents results of time-frequency analysis of audio acoustic discrete-time signals using the method of Concentrated Spectrograph also known as "Reassignment method" or "Cross-spectral method". This approach involves signal's local group delay and channelized instantaneous frequency to relevantly redistribute all Short-time Fourier transform lines over time-frequency plain. The main intention of the paper is to compare various guitar playing techniques including legato, staccato, vibrato etc. Additionally, the advantages of Concentrated Spectrograms especially high energy concentration in comparison with classical spectrogram based directly on Short-time Fourier transform are presented. Moreover, the vibrato playing technique is considered also for another musical instruments including flute and violin.

# 1 Introduction

The time-frequency (TF) energy distribution referred to as Concentrated Spectrogram is employed to illustrate the decomposition of audio acoustic signals and investigate the unique features of various playing techniques. In the paper, zoomed fragments of spectrograms to emphasize some typical details such as local instantaneous frequency evolution, a way of birth and death of partials etc. are especially presented. The similar subject is reported in few papers including [6, 3].

The proposed method of TF analysis is one of the Gabor transforms that have many advantages. Firstly, they are linear, which simplifies interpretation of the transform and development of analysis systems. Secondly, cells (also referred to as: TF bins, Heisenberg boxes, Gabor atoms etc.) of time-frequency representation (TFR) have the same size in the whole domain (in contrast to scalograms). Specifically for Short-time Fourier transform (STFT), shapes of the cells are determined by a window function. Thirdly, there exists an inverse transformation, that ensures the possibility of the analysed signal reconstruction. Moreover, Gabor transformations do not cause so-called cross-terms – artefacts that are serious problem in many nonlinear transforms [1].

The method of calculating the concentrated spectrogram has been introduced by several authors under various names, including the modified moving window method published firstly in [4], the cross-spectral method [5], the time-frequency reassignment [2], method of reassignment, remapping, relocation, replacement, displacement etc. Kodera *et al.* proposed the usage of local group delay (LGD) and channelized instantaneous frequency (CIF) to redistribute energy of STFT in TF plain. In case of discrete signals and its transforms, both LGD and CIF perform new TF coordinates of STFT lines. Similarly to STFT, imaging obtained in this way is subject to the Heisenberg-Gabor uncertainty principle, but new locations are more precise compared to those obtained by classical STFT. It is mainly caused by the reduction of DFT leakage effect for discrete transforms [1].

# 2 Concentrated Spectrogram

The concentrated spectrogram is calculated using the modified moving window method (MMWM). Firstly, STFT of the causal time-dependent and discrete-time signal $x[n]$ is obtained using following formula:

$$X[l,k] := \sum_{m=0}^{M-1} x[lD+m] \exp\left(j2\pi m(k/K - 1/2)\right) \quad (1)$$

where $k = 0, 1, ..., K-1; l = 0, 1, ..., L-1; n = 0, 1, ..., N-1; D, K, L, M, N \in \mathbf{I}$. $M$ is the width of the window $h[m]$ (single frame) and the obtained transform $X[l,k]$ has size of $L \times K$. $L$ depends on the entire signal length $N$, and $K$ is the length of the single running DFT which is contained in each column of the transform. Each single DFT carries information about negative and positive frequencies: $(-F_s/2, F_s/2)$, where $F_s$ means the sampling rate (in Sa/s) of discrete-time signal. $D$ is the time step (in Sa) between neighbouring frames.

The next step of MMWM is calculation of relocated TF coordinates for each STFT line. The new locations are obtained by calculating of local group delay as:

$$T[l,k] := \frac{K}{2\pi F_s} \mathrm{Arg}(X[l,k]X^*[l,k-1]) \quad (2)$$

and channelized instantaneous frequency as:

$$F[l,k] := \frac{F_s}{2\pi} \mathrm{Arg}(X[l,k]X^*[l-1,k]) \quad (3)$$

where $X^*[l,k]$ is the complex conjugation of $X[l,k]$ and Arg means the principal argument of a complex number. The relocated coordinates are obtained by:

$$(t_l, \omega_k) \rightarrow (t_l - T[l,k], F[l,k]) \quad (4)$$

where $t_l$ is delay of $l$-th frame and $\omega_k$ is center frequency of $k$-th channel.

Simultaneously, the energy of each STFT line is calculated as follows:

$$E[l,k] = |X[l,k]|^2 \quad (5)$$

The general signal processing scheme is presented below in the fig. 1, where POW means estimation of the transform energy according to the formula (5).

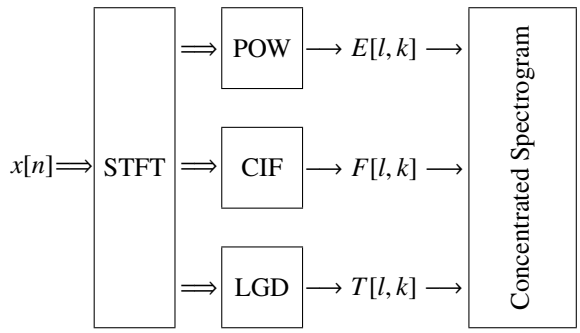


Figure 1: The processing scheme. Double line arrows represent complex signals, single line arrows - real signals.

# 3 Analysis of acoustic records

Spectrograms presented in the paper originate mainly from the sound of acoustic guitar when different playing techniques are applied such us: legato, staccato, bending slide, glissando and vibrato. Moreover, the vibrato technique is presented also for flute and violin.

### 3.1 Legato

Legato is a form of a musical articulation, where notes are played fluently and smoothly. A listener should have an impression that sounds are connected. There are various techniques of legato playing on the acoustic guitar, e.g. hammering, pull-off, tapping. On the whole a player can achieve this effect by rapid changes of the strings pressing on the fingerboard and simultaneously by the coherent synchronised strings striking by fingers or by guitar pick. Intervals between the sounds should be as short as possible. The important factor in legato techniques is also proper damping of strings oscillation. The spectrograms of the legato articulation sample is presented in the fig. 2.

### 3.2 Staccato

Staccato, like legato, is a kind of musical articulation. However, as opposed to legato technique, sounds are played clearly separately. Additionally, in staccato technique, duration of sounds is visibly reduced in order to emphasize a distinct changes of pitch. Guitar player can force such effect by sudden suppression of strings vibration by fingers soon after hitting the strings. The separation of sounds is well visible on the spectrogram in the fig. 3, where staccato technique analysed is presented.

### 3.3 Glissando

Glissando is a kind of a smooth transition from one pitch to another playing all sounds between. When playing the guitar, this effect is produced pushing all frets by sliding finger along fingerboard after the single hit in the string. In slang this effect is referred to as glis. The record spectrogram of such effect is presented in the fig. 3.

### 3.4 Bending

Bending is a kind of guitar lick. However, it can be played also on another string instruments. Banding can be produced by pulling or pushing the string across the fingerboard. Thus player raises the tension in the vibrating string and as a result always raises the pitch of a note. This is clearly visible in the fig. 4, where concentrated and classical spectrograms are compared.

### 3.5 Slide

Smooth transition of pitch obtained by using so-called bottleneck (or another flat and hard items) is referred to as the slide. It is applied by raising and lowering of instantaneous frequency of sound. The bottleneck is fluently moved during the performance along the guitar fingerboard touching the strings. This effect is used mainly as some kind of musical ornament. Slides whose spectrograms are presented in the paper in the fig. 5, were produce using a plastic bottleneck.

### 3.6 Vibrato

Vibrato is a technique of playing musical instruments. For violin, vibrato is created by the rhythmic motion of performer's wrist across the fingerboard. This causes change of the strings tension and, consequently, the modulation of both amplitude and frequency of the sound. Similarly for guitar, the player can produce the vibrato by turns push and pull strings across the fretboard simultaneously pressing the string to the fret. However for flute, the vibrato is obtained due to a proper pulsation of the windstream controlled by player's muscles in the throat and diaphragm. The comparison of vibrato effect records spectrograms is presented in fig. 6.

## 4 Conclusion

The presented method of analysis is precise and it can be applied for careful identification of sounds, melody, instruments and various techniques or effects. Characteristic features of various playing techniques and effects contained in the analysed records are clearly visible on presented spectrograms. For staccato musical articulations, energy on the spectrogram is distributed vertically over time-frequency plain in the initial stage of sounds duration, that indicates rapid escalation of sound intensity. Similarly, suppressions of sounds are fairly determined that makes signal emission interruptions. That is in opposed to legato musical articulations, where the signal seems to be continuous. On the other hand, for bending, slide and vibrato effects, the spectrograms present unambiguously modulation depth and deviation of signal instantaneous frequency.

## Acknowledgments

The sincere thanks from the authors to Łukasz Lazer and Joanna Czarnecka for providing professional records of acoustic guitar and another musical instruments.

## References

[1] K. Czarnecki, M. Kaniewska, M. Moszyński, M. Rojewski, "Concentrated Spectrogram of Acoustic Signals", *Archives of Acoustics* (in review)

[2] P. Flandrin, F. Auger, E. Chassande-Mottin, *Time-frequency reassignment: From principles to algorithms*, *Applications in Time-Frequency Signal Processing*, A. Papandreou-Suppappola [Ed.], 179-203, CRC Press. (2003)

[3] P. Guillemain, R. Kronland-Martinet, "Characterization of acoustic signals through continuous linear time-frequency representations", *Proceedings of the IEEE* **84**(9), 1216-1230, (1996)

[4] K. Kodera, C. De Villedary, R. Gendrin, "A new method for the numerical analysis of non-stationary signals", *Physics of The Earth and Planetary Interiors*, **12**(2-3), 142-150, (1976).

[5] D.J. Nelson, "Cross-spectral methods for processing speech", *J. Acoust. Soc. Am.*, **110**(5), 2575-2592, (2001)

[6] W.J. Pielemeier, G.H. Wakefield, "A high-resolution time-frequency representation for musical instrument signals", *J. Acoust. Soc. Am.* **99**(4), 2382-2396 (1996)

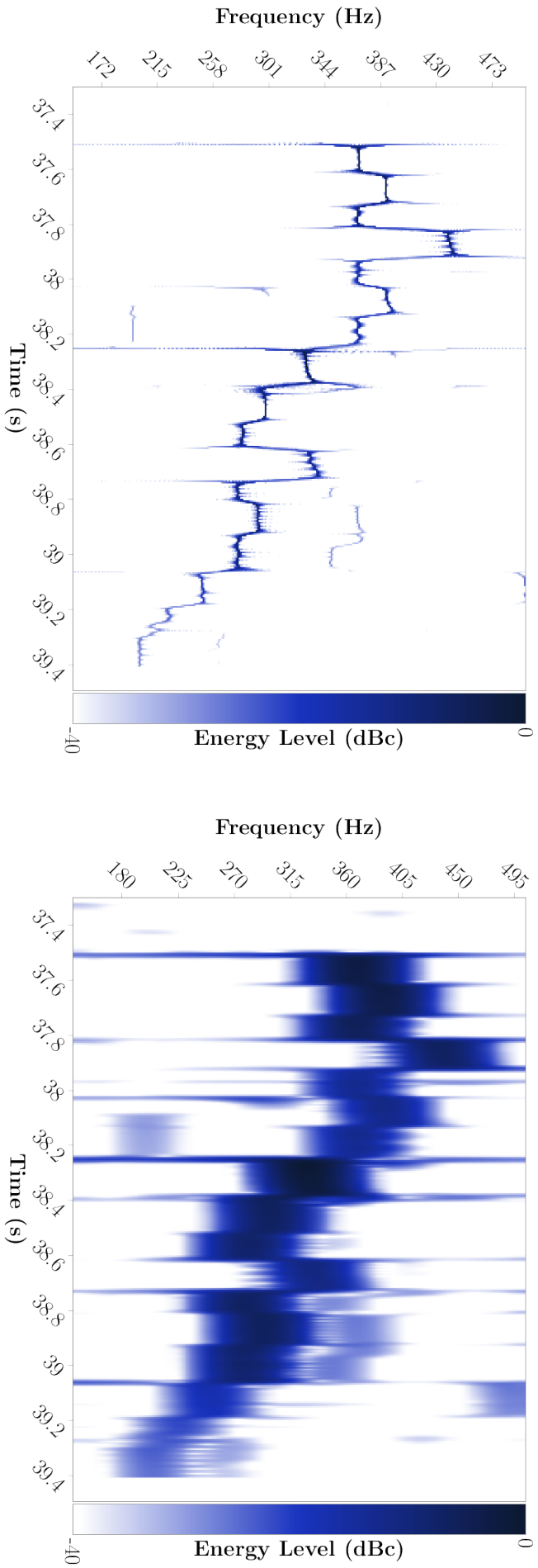


Figure 2: Concentrated spectrogram (upper) and classical spectrogram (lower) of record playing in legato articulation.

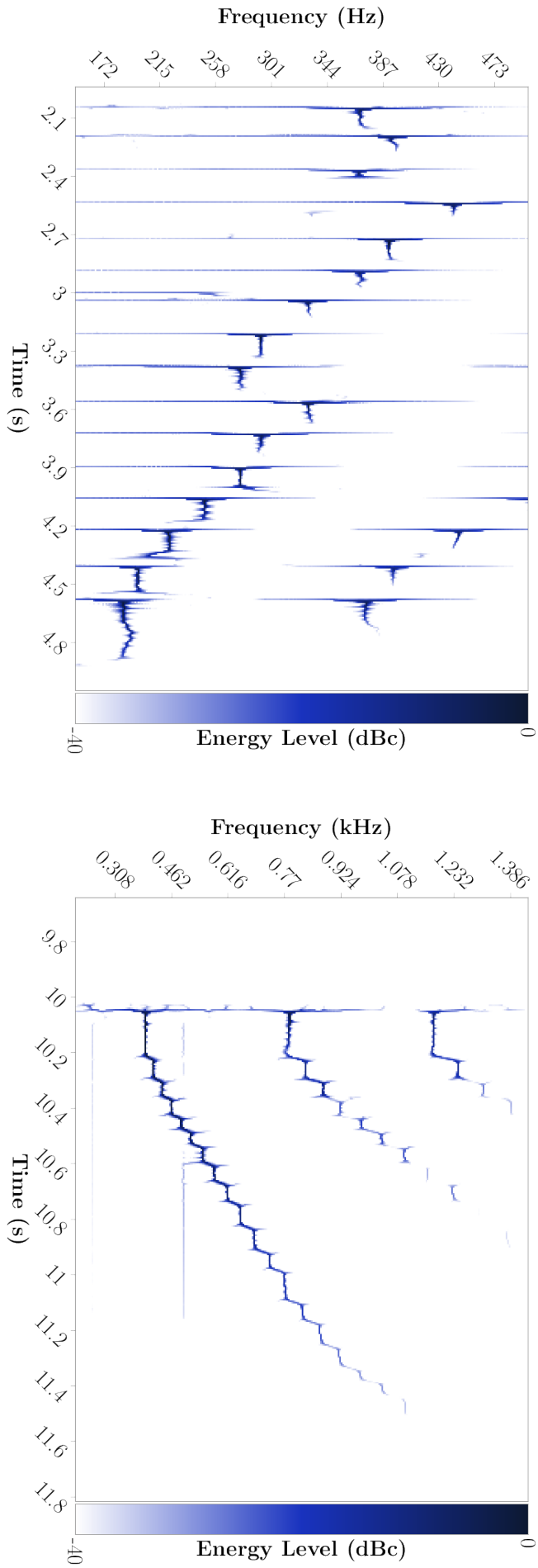


Figure 3: Concentrated spectrograms of staccato articulation record (upper) and glis effect record (lower).

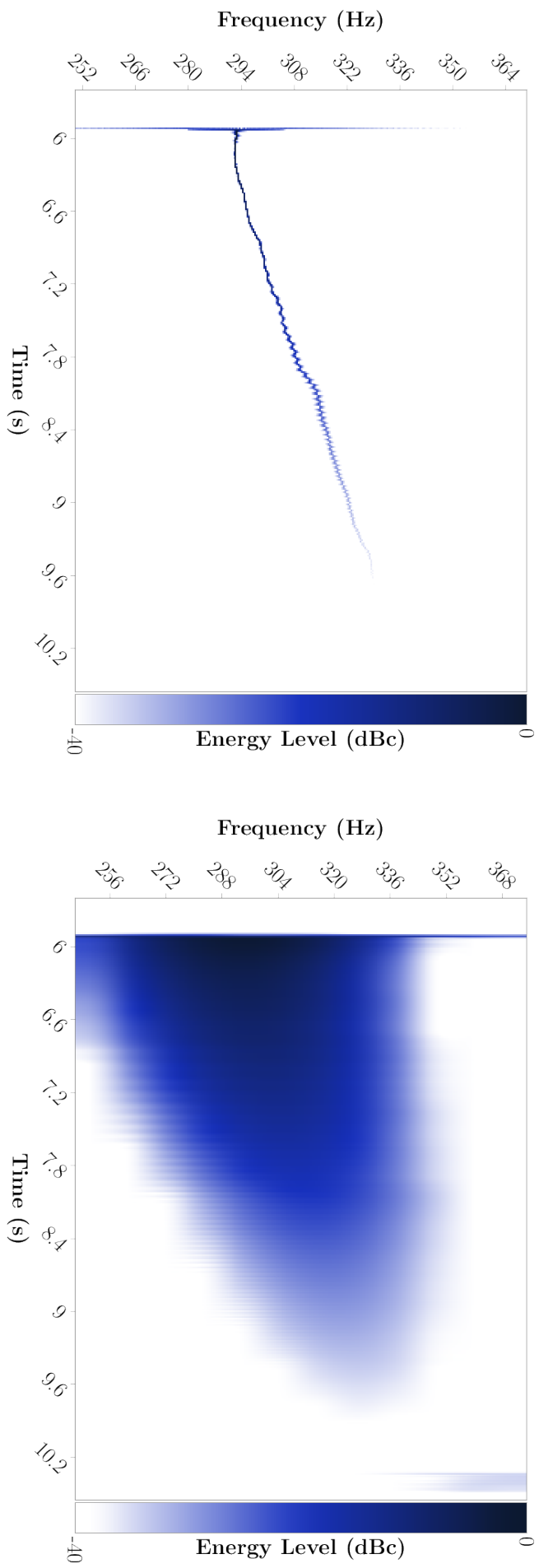


Figure 4: Concentrated spectrogram (upper) and classical spectrogram (lower) of bending effect record.

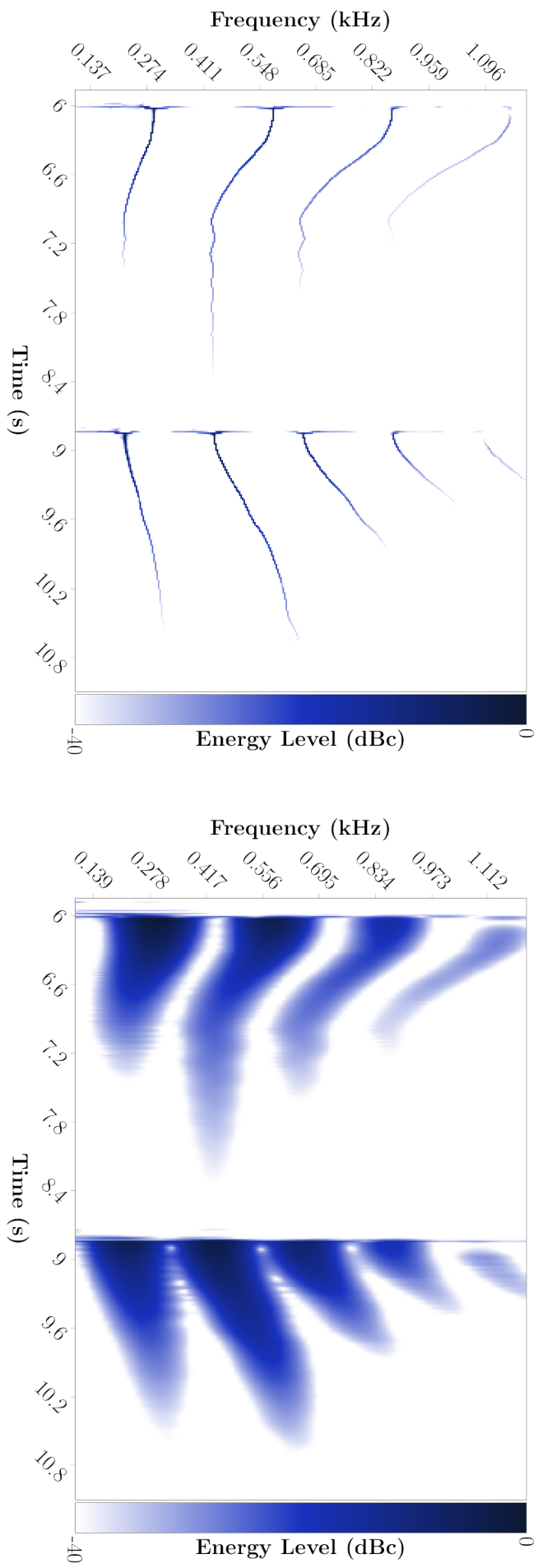


Figure 5: Concentrated spectrogram (upper) and classical spectrogram (lower) of slide playing technique.

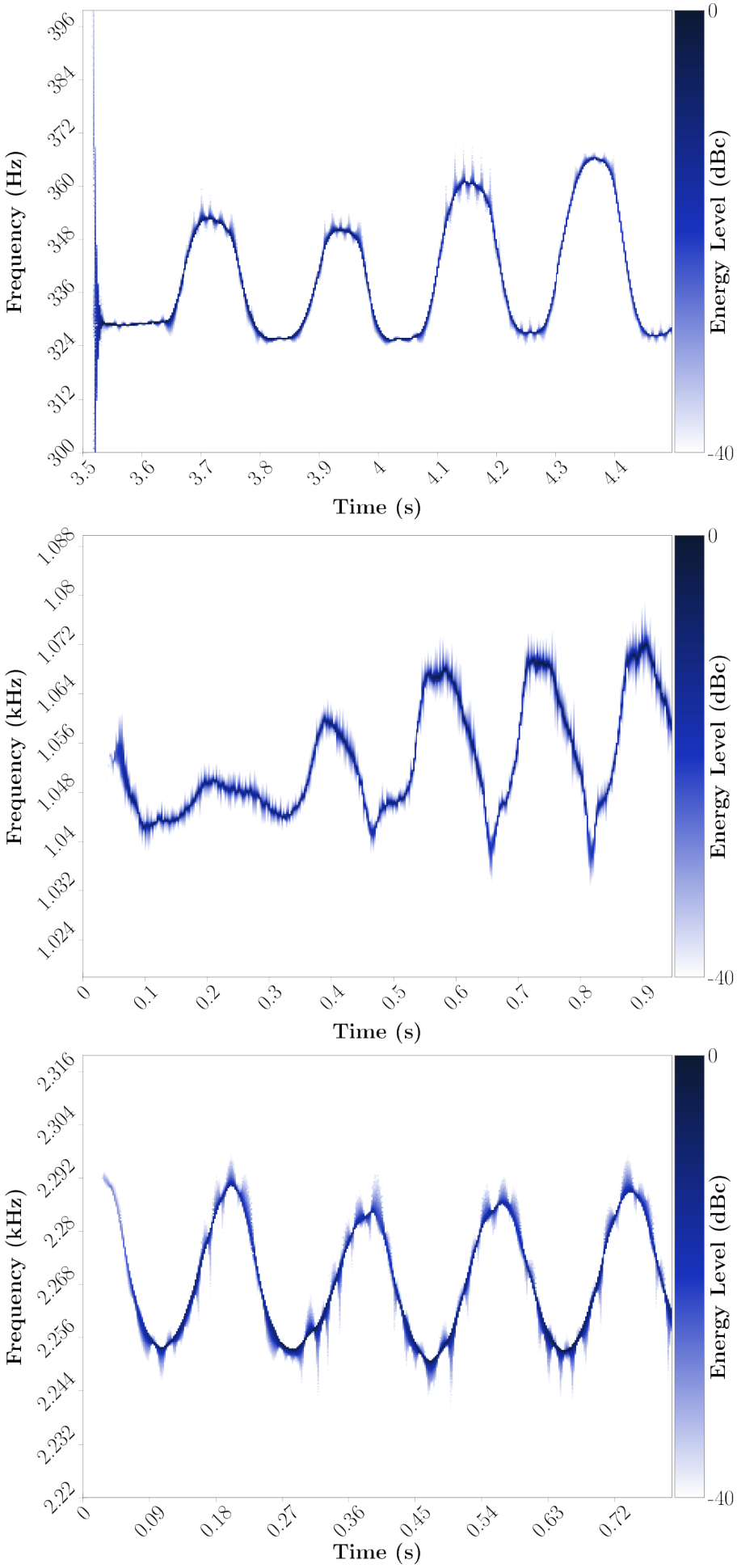


Figure 6: Concentrated spectrograms of vibrato effect record played on an acoustic guitar (upper), flute (in the middle) and violin (lower).