HAL
open science

Combining H∞ approach and interval tools to design a low order and robust controller for systems with parametric uncertainties : application to piezoelectric actuators.

Sofiane Khadraoui, Micky Rakotondrabe, Philippe Lutz

To cite this version:

Sofiane Khadraoui, Micky Rakotondrabe, Philippe Lutz. Combining H∞ approach and interval tools to design a low order and robust controller for systems with parametric uncertainties : application to piezoelectric actuators.. International Journal of Control, 2012, 85 (1-3), pp.251-259. 10.1080/00207179.2011.644582 . hal-00799338

HAL Id: hal-00799338

https://hal.science/hal-00799338v1

Submitted on 18 Mar 2013

HAL is a multi-disciplinary open access archive for the deposit and dissemination of scientific research documents, whether they are published or not. The documents may come from teaching and research institutions in France or abroad, or from public or private research centers.

L'archive ouverte pluridisciplinaire **HAL**, est destinée au dépôt et à la diffusion de documents scientifiques de niveau recherche, publiés ou non, émanant des établissements d'enseignement et de recherche français ou étrangers, des laboratoires publics ou privés.

RESEARCH ARTICLE

Combining H_∞ approach and interval tools to design a low order and robust controller for systems with parametric uncertainties: application to piezoelectric actuators

Sofiane Khadraoui, Micky Rakotondrabe* and Philippe Lutz

Automatic and MicroMechatronic Systems (AS2M) department
FEMTO-ST Institute
CNRS, UFC, ENSMM, UTBM
Besançon France
()

This paper presents the design of a robust controller for uncertain systems whose the parameters are bounded by intervals. For that, we propose to combine the standard H_∞ approach with interval tools in order to ensure robust performances. The main advantantages of the proposed approach are: 1) the natural and ease of modeling of the uncertain parameters thanks to intervals, 2) and the derivation of a low order controller since its structure can be fixed *a priori* and since the order is lower than the system order. In particular, we demonstrate that a PID-structure can be used to control a nth order interval system. The approach is afterwards applied to design a robust controller for a piezoelectric actuator and the experimental results effectively show its efficiency.

Keywords: Interval systems, parametric uncertainties, robust control design, robust performances, standard H_∞, piezoelectric actuators

1 INTRODUCTION

Since the formalisation of intervals in the works of Moore in 1966 (1), these tools have been used in various applications in the field of the control theory: modeling, algorithms and computation, signals and parameters estimation, stability analysis and control design. Concerning the modeling, intervals are used to bound the uncertain parameters in the state-space, transfer-functions or differential representation. This representation called interval system allows an ease, natural and certified characterization of the uncertainties. The objective of the control design consists therefore to find a controller that ensures the stability for a given interval system, i.e. to find a controller that stabilizes the set of systems bounded by the interval system. Such robust stability synthesis has involved several works (2, 3, 4). However, more than the robust stability, the synthesis of controllers that ensure robust performances has also attracted the attention within these ten last years. For instance, *Chen* and *Wang* (5) proposed a method to design the robust performances controller for interval systems in the state-space representation. Two interval controllers synthesis were therefore necessary: a robust controller for stabilization which is in the feedback, and a pre-filter to ensure the wanted performances. In (6), the performances inclusion of two interval systems - themselves enclosed each-other - was stated. In (7), *Bondia et al.* design a PID controller that ensures robust performances for parametric uncertain transfer functions that have low order. However, its numerical application becomes difficult when the

*Corresponding author. Email: mrakoton@femto-st.fr

orders of the interval systems become high. In fact, numerically, it is limited to second order models. In (8), the authors suggested a control algorithm prediction-based interval model that was efficiently applied to a welding process. Finally, in our previous works, we proposed to design robust controllers to ensure some performances for piezoelectric actuators used for precise positioning (9) or for precise manipulation with controlled force (10). Further in (11), we demonstrated *a posteriori* the robustness of the designed controllers. These piezoelectric actuators used in precise positioning and precise manipulation (micropositioning and micromanipulation) are characterized by a high sensitivity to the environment (ambiant temperature varition, manipulated objects, etc.) and exhibit a behavior variation during their use. These characteristics lead to a variation or an uncertainty on the parameters of their models and robust control laws were therefore necessary.

Prior to intervals methods to synthesis robust controllers for piezoelectric actuators, H_2, H_∞ and μ*-synthesis* approaches were efficiently used (12, 13, 14). These methods provide a precise formulation and solution of the controllers synthesis problem for which the H_∞-norm of a prescribed transfer function is minimized. However, the derived controllers (even reduced) are of high-order comparatively to the available implementation setup: controllers orders are more than 10 whilst the setup is a classical PIC microcontroller with a sampling time of $0.2ms$. Due to the time consuming of the controllers, an unstability of the closed-loop often occurs when experimentally tested. The previous works based on intervals (9, 10, 11) have therefore allowed the derivation of robust controllers with low orders and which are suitable for the available implementation setup. It is reminded that the principle of the control design consisted in combining interval analysis with a classical control design technique. These works demonstrate the feature and promise that offers interval control design for piezoelectric actuators based micropositioning and micromanipulation.

This paper presents the design of robust controllers for piezoelectric actuators dedicated to precise positioning. For that we combine the interval technique with the standard H_∞ to ensure robust performances for the closed-loop. The main advantage relative to the previous works on interval control design is that the specifications are not only limited to tracking performances only but can be more general: tracking performances, input control limitation, disturbance rejection, noises reduction, etc. This generalization of the specifications is possible thanks to the use of weighting functions as proposed by the standard H_∞ approach. Furthermore, the interval systems considered in this paper is of nth-order and the proposed control design is not therefore limited to low order systems. The derived controllers are also of low orders since the latter can be inferior to the systems orders. Additionally, under some conditions to be respected, the structure of the controllers are fixed *a priori*. In this paper, we particularly focus on the design of a PID-structured robust controller for n^{th}-order interval systems.

The paper is organized as follows. In section-II, preliminaries on interval analysis and systems are first presented. Section III is dedicated to the design of a PID control for interval systems. In section IV, we apply the proposed method to design a controller for piezocantilevers. Finally, we present in section V the controller implementation and some discussions relative to the experimental results.

2 Preliminaries on intervals

2.1 *Basic Terms and Concepts on intervals*

A closed interval number denoted by $[x]$ is a closed bound such as:

$$[x] = [x^-, x^+] = \left\{x \in R / x^- \leq x \leq x^+\right\} \tag{1}$$

where x^- and x^+ are the left and right endpoints of $[x]$ respectively.

We say that $[x]$ is degenerate if $x^- = x^+$. By convention, a degenerate interval $[a, a]$ can be described with the real number a.

The width of an interval $[x]$ is given by $w([x]) = x^+ - x^-$. The midpoint of $[x]$ is given by $mid([x]) = \frac{x^+ + x^-}{2}$ and the radius of $[x]$ is defined by $rad([x]) = \frac{x^+ - x^-}{2}$.

2.2 *Operations on intervals*

The elementary mathematical operations can be extended to intervals. Let $[x] = [x^-, x^+]$ and $[y] = [y^-, y^+]$ be two intervals and let $\circ \in \{+, -, *, /\}$ be a law. Thus, We have:

$$[x] \circ [y] = \{x \circ y \,|x \in [x], y \in [y]\} \tag{2}$$

Table 1 gives the details of the above interval operations.

Table 1. Classical arithmetic operations on intervals (2, 1).

Operation	Definition
$+$	$[x] + [y] = [x^- + y^-, x^+ + y+]$
$-$	$[x] - [y] = [x^- - y^+, x^+ - y-]$
$*$	$[x] * [y] = [min\{x^- * y^-, x^+ * y^-, x^- * y^+, x^+ * y^+\},$ $max\{x^- * y^-, x^+ * y^-, x^- * y^+, x^+ * y^+\}]$
$/$	$[x]/[y] = [x] * [1/y^+, 1/y^-], 0 \notin [y]$

2.3 *Interval systems*

Definition 2.1: An interval model denoted by $[G](s, [\mathbf{a}], [\mathbf{b}])$ represents a family of systems:

$$[G](s, [\mathbf{a}], [\mathbf{b}]) = \frac{[N](s, [\mathbf{b}])}{[D](s, [\mathbf{a}])} = \frac{\sum_{j=0}^{m} [b_j] s^j}{\sum_{i=0}^{n} [a_i] s^i} \tag{3}$$

such as: $[\mathbf{b}] = [[b_0], ..., [b_m]]$ and $[\mathbf{a}] = [[a_0], ..., [a_n]]$ are two boxes (vectors of intervals) and s the Laplace variable. The system above [G] generally represents a model with uncertain parameters bounded by intervals.

2.4 *Vertex polynomials and vertex systems*

Given an interval system $[G](s, [\mathbf{a}], [\mathbf{b}])$ defined as in Definition 2.1 such that:

$$\begin{cases} [N](s, [\mathbf{b}]) = [b_0] + [b_1]s + [b_2]s^2 + ... + [b_m]s^m \\ [D](s, [\mathbf{a}]) = [a_0] + [a_1]s + [a_2]s^2 + ... + [a_n]s^n \end{cases} \tag{4}$$

Thus, the four Kharitonov vertex polynomials corresponding to $[N](s, [\mathbf{b}])$ and $[D](s, [\mathbf{a}])$ are:

$$\begin{array}{l} N^{(1)}(s) = b_0^- + b_1^- s + b_2^+ s^2 + b_3^+ s^3 + b_4^- s^4 + b_5^- s^5 + ... \\ N^{(2)}(s) = b_0^- + b_1^+ s + b_2^+ s^2 + b_3^- s^3 + b_4^- s^4 + b_5^+ s^5 + ... \\ N^{(3)}(s) = b_0^+ + b_1^- s + b_2^- s^2 + b_3^+ s^3 + b_4^+ s^4 + b_5^- s^5 + ... \\ N^{(4)}(s) = b_0^+ + b_1^+ s + b_2^- s^2 + b_3^- s^3 + b_4^+ s^4 + b_5^+ s^5 + ... \end{array} \tag{5}$$

and

$$\begin{array}{l} D^{(1)}(s) = a_0^- + a_1^- s + a_2^+ s^2 + a_3^+ s^3 + a_4^- s^4 + a_5^- s^5 + ... \\ D^{(2)}(s) = a_0^- + a_1^+ s + a_2^+ s^2 + a_3^- s^3 + a_4^- s^4 + a_5^+ s^5 + ... \\ D^{(3)}(s) = a_0^+ + a_1^- s + a_2^- s^2 + a_3^+ s^3 + a_4^+ s^4 + a_5^- s^5 + ... \\ D^{(4)}(s) = a_0^+ + a_1^+ s + a_2^- s^2 + a_3^- s^3 + a_4^+ s^4 + a_5^+ s^5 + ... \end{array} \tag{6}$$

respectively.

The sixteen Kharitonov (point) systems that corresponds to the interval system $[G]$ are the combination of these vertex polynomials. These sixteen Kharitonov systems are called vertex of $[G]$. We denote these sixteen Kharitonov vertex by $G^{(i)}$, with $i = 1 \rightarrow 16$.

2.5 *H_∞-norm of an interval system*

Theorem 2.2 Consider the interval system $[G](s, [\mathbf{a}], [\mathbf{b}])$ defined in Definition 2.1. The H_∞-norm of $[G]$ is the maximal among the H_∞-norm of the sixteen vertex, i.e.:

$$\|[G]\|_\infty = \max_{i=1\rightarrow 16} \left\| G^{(i)} \right\|_\infty \tag{7}$$

Proof see (15, 16). □

When the interval system $[G]$ is weighted by a weigthing function $W(s)$ which is a point, it is not advised to compute the multiplication $W[G]$ first and compute the H_∞-norm of the resulting interval plant afterwards. Indeed, developping the multiplication of the intervals polynomials produces a multi-occurance of the parameters and therefore a surestimation of the resulting intervals. Thus, the H_∞-norm of $W[G]$ is defined as follows:

$$\|W\,[G]\|_\infty = \max_{i=1\rightarrow 16} \left\| W G^{(i)} \right\|_\infty \tag{8}$$

In *Long-Wang* (17), the H_∞-norm of the sensitivity function of an interval system $[G](s, [\mathbf{a}], [\mathbf{b}])$ is proposed. The sensitivity of $[G]$ is defined by $[S] = \frac{1}{1+[G]} = \frac{[D]}{[N]+[D]}$, where $[N]$ and $[D]$ are the numerator and denominator defined in Definition 2.1. It has been then demonstrated that the sensitivity $[S]$ has only twelve vertex instead of sixteen vertex and thus its H_∞-norm is the maximal among the twelve norms:

$$\|[S]\|_\infty = \left\| \frac{[D]}{[N]+[D]} \right\|_\infty = \max_{i=1\rightarrow 12} \left\| S^{(i)} \right\|_\infty \tag{9}$$

3 Controller design method

In this section, we propose to design robust PID controllers for interval systems. The robust performances are achieved by combining the standard H_∞ and interval tools. While the specifications and wanted performances are transcribed in term of weightings and the standard H_∞ is used to formulate the objective or problem, interval tools are used to compute the controllers.

3.1 *Problem formulation*

Consider the closed-loop pictured in Fig. 1, where $[G](s,[\mathbf{a}],[\mathbf{b}])$ is a SISO interval system to be controlled. $[C](s)$ is the controller to be designed. $[\mathbf{a}]$ and $[\mathbf{b}]$ are the interval parameters of the system. $y_c(t)$ is the reference input, $y(t)$ is the output signal and $u(t)$ is the input control signal.

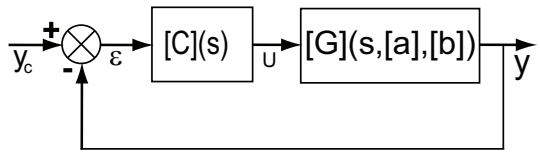

Figure 1. Closed-loop control system.

We assume that the system $[G](s,[\mathbf{a}],[\mathbf{b}])$ is a general n^{th}-order system defined by:

$$[G](s,[\mathbf{a}],[\mathbf{b}]) = \frac{\sum_{j=0}^{m}[b_j]s^j}{\sum_{i=0}^{n}[a_i]s^i} \tag{10}$$

such as: $[\mathbf{a}] = [[a_0],...,[a_n]]$ and $[\mathbf{b}] = [[b_0],...,[b_m]]$, and $m \leq n$.

In the proposed approach, the structure of the controller can be *a priori* fixed. For that, consider the example of a PID structure with adjustable parameters $[\theta] = [[K_p],[K_i],[K_d]]$:

$$[C](s,[\theta]) = [K_p] + [K_d]s + [K_i]\frac{1}{s} \tag{11}$$

The objective is to find the set solution of PID parameters so that the closed-loop system respect some given performances whatever the parameters a_i and b_j ranging in the intervals $[a_i]$ and $[b_j]$ respectively. For that, the PID parameters will be adjusted using of H_∞-criterion. Such criterion is defined as the H_∞-norm of some weighted transfer functions of the closed-loop to be less than or equal to one.

3.2 *Remind of the H_∞-standard principle*

The H_∞-standard that considers the tracking performances and the input control limitation (18, 19) uses the standard block as pictured in Fig. 2-b where $P(s)$ is called the augmented system. This standard scheme is derived from the weighted closed-loop in Fig. 2-a. While the weighting $W_1(s)$ is used to transcribe the tracking performances, the weighting $W_2(s)$ is used to transcribe the input control limitation.

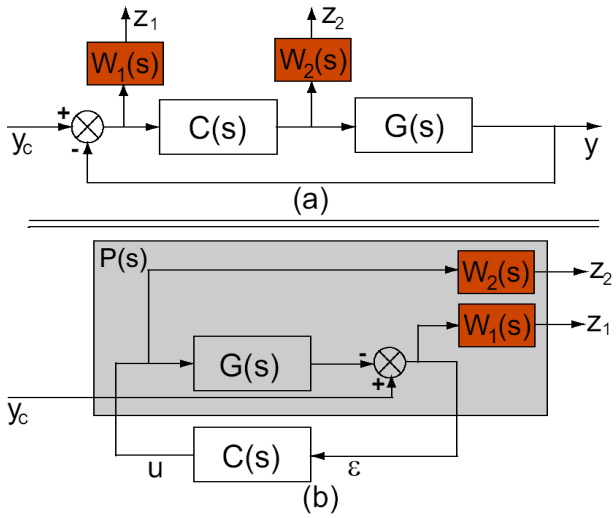

Figure 2. Standard H_∞ control scheme.

Thus, the H_∞ problem consists to find a controller stabilizing the closed-loop and achieving the following H_∞-criterion:

$$\|F_l(P(s), C(s))\|_\infty \leq \gamma \tag{12}$$

where γ is a positive scalar. If $\gamma \leq 1$, the nominal (specified) performances are achieved.

The linear fractionar transformation $F_l(P(s), C(s))$ is the transfer between the weighted outputs and the exogenous inputs of Fig. 2-b. That is:

$$F_l(P(s), C(s)) = z(s).y_c^{-1}(s) \tag{13}$$

with $z = \begin{pmatrix} z_1 \\ z_2 \end{pmatrix}$

From Fig. 2-a $F_l(P(s), C(s))$ is given by:

$$F_l(P(s), C(s)) = \begin{pmatrix} W_1(s)S(s) \\ W_2(s)C(s)S(s) \end{pmatrix} \tag{14}$$

Applying the H_∞ standard problem in (Eq.12) to (Eq.13) and (Eq.14), we obtain the following conditions to be satisfied:

$$\begin{cases} \|W_1(s)S(s)\|_\infty \leq \gamma \\ \|W_2(s)C(s)S(s)\|_\infty \leq \gamma \end{cases} \tag{15}$$

3.3 *H_∞ approach for interval systems*

In our case the system is an interval model $[G](s, [\mathbf{a}], [\mathbf{b}])$, the controller to be designed is a PID controller (Eq.11). Since the system is interval, the augmented plant will also be interval: $[P](s, [\mathbf{a}], [\mathbf{b}])$. Moreover, the H_∞-criterion $\|F_l([P](s, [\mathbf{a}], [\mathbf{b}]), [C](s, [\theta]))\|_\infty \leq \gamma$ is given by:

$$\begin{cases} \|W_1(s)[S](s)\|_\infty \leq \gamma \\ \|W_2(s)[C](s,[\theta])[S](s)\|_\infty \leq \gamma \end{cases} \tag{16}$$

In this case, if $\gamma \leq 1$, the robust performances are achieved.

The problem of finding the PID controller with tunable parameters $[\theta]$ can be formulated as follows:

Find the set Θ of PID parameter vector for which H_∞ performance holds for any positive number $\gamma \leq 1$, i.e.,

$$\Theta := \left\{ \theta \in [\theta] \left| \begin{cases} \|W_1(s)[S](s)\|_\infty \leq \gamma \\ \|W_2(s)[C](s,[\theta])[S](s)\|_\infty \leq \gamma \end{cases} \right. \right\} \tag{17}$$

where $[S](s)$ depends on the PID parameters $[\theta]$ and of the boxes $[\boldsymbol{a}]$ and $[\boldsymbol{b}]$.

The problem given in (Eq.17) is known as a set-inversion problem which can be solved using set inversion algorithms. The set inversion operation consists to search the reciprocal image called subpaving of a compact set. One algorithm used to solve a set-inversion problem is the SIVIA algorithm ((20, 2)). By using SIVIA, it is possible to approximate with subpavings the set solution Θ described in (Eq.17). The subpaving Θ corresponds to the controller parameters for which the problem (Eq.17) is fulfilled. Table 2 presents the recursive SIVIA algorithm. It requires a search box $[\theta_0]$ also called initial box. The subpavings Θ is initially empty. ϵ represents the wanted accuracy of computation.

Table 2. SIVIA Algorithm used to solve the set-inversion problem (Eq.17).

	SIVIA(in: $\|F_l([P](s,[\mathbf{a}],[\mathbf{b}]),[C](s,[\theta]))\|_\infty$, γ, $[\theta]$, ϵ; inout: Θ)
1	if $\|F_l([P](s,[\mathbf{a}],[\mathbf{b}]),[C](s,[\theta]))\|_\infty \leq \gamma$ then $\{\Theta := \Theta \bigcup [\theta]\}$ return;
2	if $width([\theta]) < \epsilon$ then $\{\Theta := \Theta\}$; return;
3	bisect $[\theta]$ into $L([\theta])$ and $R([\theta])$;
4	SIVIA($\|F_l([P](s,[\mathbf{a}],[\mathbf{b}]),[C](s,L([\theta])))\|_\infty$, γ, $L([\theta])$, ϵ; Θ); SIVIA($\|F_l([P](s,[\mathbf{a}],[\mathbf{b}]),[C](s,R([\theta])))\|_\infty$, γ, $R([\theta])$, ϵ; Θ).

However, the previous resolution requires the computation of the H_∞-norm of each term in (Eq.17) which are interval transfers. This computation can be done by using the preliminaries in section-II. The H_∞-norm $\|W_1(s)[S](s)\|_\infty$ is obtained by applying the definition in (Eq.8) and (Eq.9). We have:

$$\|W_1[S]\|_\infty = \max_{i=1\to 12} \left\| W_1 S^{(i)} \right\|_\infty \tag{18}$$

On the other hand, the H_∞-norm $\|W_1(s)[C](s,[\theta])[S](s)\|_\infty$ is obtained by applying the definition in (Eq.8) only, i.e.:

$$\|W_1[C][S]\|_\infty = \max_{i=1\to 16} \left\| W_1 M^{(i)} \right\|_\infty \tag{19}$$

where $[M] = [C][S]$ and $M^{(i)}$ $(i = 1 \to 16)$ are the sixteen vertex of $[M]$.

Finally, contrary to the standard H_∞ problem (for point systems) where the optimal value of γ is found by dichotomy, we directly impose in this paper its value equal to one: $\gamma = 1$. The

objective is to find directly the controller parameters with which the specified performances are respected.

4 Application to a piezoelectric actuator

The objective of this section is to apply the proposed method to control the deflection (position) of a piezoelectric actuator with a cantilever structure and which are widely used in the development of manipulators able to position or manipulate small parts very precisely (21, 22). The used actuator, also called unimorph piezoelectric cantilever (or piezocantilever), is composed of two layers: a piezoelectric layer (piezolayer) based on lead-zirconate-titanate (PZT) material and a passive layer based on nickel material. When a voltage is applied to the piezolayer, it expands/contracts which finally results a global deflection of the cantilever (Fig. 3). The deflection of the actuator is denoted δ.

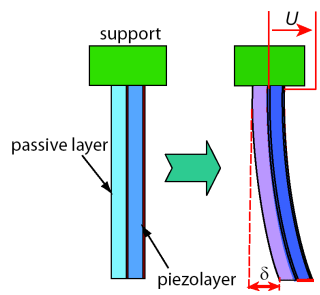

Figure 3. A unimorph piezoelectric actuator.

4.1 *Presentation of the setup*

The experimental setup used to identify and control the system is pictured in Fig. 4 and is based on:

- a unimorph piezocantilever having dimensions of $16mm \times 1mm \times 0.45mm$ (length, width and thickness),
- an optical sensors (Keyence LC-2420) with $10nm$ of resolution used to measure the deflection,
- a computer-DSpace hardware and the Matlab-Simulink software for the data-acquisition and control,
- and a high voltage (HV: $\pm 200V$) amplifier.

4.2 *Modeling and identification*

The linear relation between the deflection at the tip of the actuator and the applied input voltage U is:

$$\delta = G(s)U \tag{20}$$

Where $G(s)$ is a transfer function. During a micromanipulation or a micropositioning task, the parameters in $G(s)$ are subjected to variation due to the environment (small thermal variation, manipulated object, etc.). In fact, these characteristics come from the relatively small sizes of the

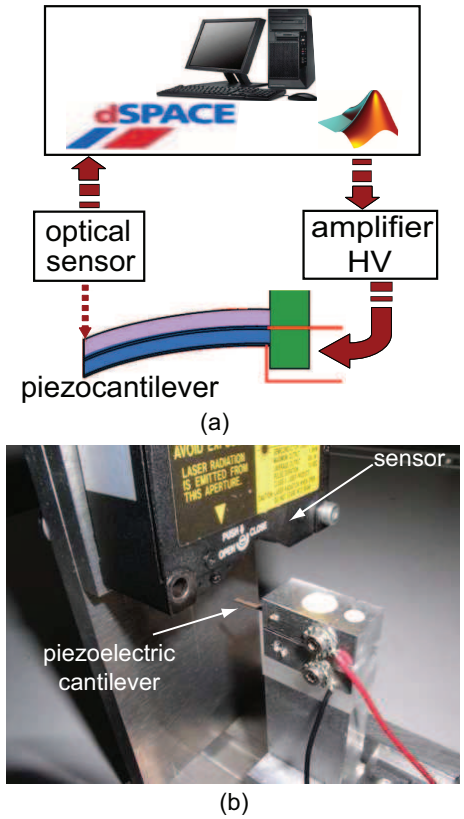

Figure 4. The experimental setup.

piezoelectric actuators used in micromanipulation and micropositiong applications which finally make them very sensitive to any minor variation. The model parameters can be considered as uncertain and thus bounded by intervals within its range of variation in order to further design a robust controller.

However, for an ease of identification in this example, we will not characterize the parameter variations of the piezoelectric actuator during a micropositioning or a micromanipulation task. We will use two piezoelectric actuators each one identified without performing these tasks. Then, the interval model is deduced by using the two point models. The first piezocantilever being presented above, the second piezocantilever has dimensions of $14mm \times 1mm \times 0.45mm$ (length, width and thickness). The difference in their lengths will lead to a difference in their model parameters.

To identify the two models $G_1(s)$ and $G_2(s)$ corresponding to the two piezocantilevers, a step response is used. As the first mode is often sufficient for micromanipulation and micropositioning tasks, a second order model was chosen for each model. Using the output error method and the matlab software, we obtain:

$$\begin{aligned} G_1(s) &= 0.6587\frac{3.533 \times 10^{-8}s^2 + 2.152 \times 10^{-4}s + 1}{3.374 \times 10^{-8}s^2 + 8.171 \times 10^{-6}s + 1} \\ G_2(s) &= 0.45\frac{3.336 \times 10^{-8}s^2 + 1.679 \times 10^{-4}s + 1}{2.119 \times 10^{-8}s^2 + 4.607 \times 10^{-6}s + 1} \end{aligned} \tag{21}$$

Let us rewrite each model $G_i(s)$ for $i = 1, 2$ as follows:

$$G_i(s) = k_i\frac{b_{2i}s^2 + b_{1i}s + 1}{a_{2i}s^2 + a_{1i}s + 1} \tag{22}$$

such as: k_i and $\frac{b_{2i}s^2+b_{1i}s+1}{s^2+a_{1i}s+1}$ are the static gain and dynamic part of the piezocantilever with length l_i $(i = 1, 2)$.

4.3 *Derivation of the interval model*

The interval model $[G](s, [\mathbf{a}], [\mathbf{b}])$ that represents a family of models is derived using the two point models $G_i(s)$. Considering each parameter of $G_1(s)$ and $G_2(s)$ as an endpoint of the interval parameter in $[G](s, [\mathbf{a}], [\mathbf{b}])$, we have:

$$[G](s, [\mathbf{a}], [\mathbf{b}]) = [K]\frac{[b_2]s^2 + [b_1]s + 1}{[a_2]s^2 + [a_1]s + 1} \tag{23}$$

such as:

$$\begin{array}{l} [K] = [min(k_1, k_2), max(k_1, k_2)] \\ [b_1] = [min(b_{11}, b_{12}), max(b_{11}, b_{12})] \\ [b_2] = [min(b_{21}, b_{22}), max(b_{21}, b_{22})] \\ [a_2] = [min(a_{21}, a_{22}), max(a_{21}, a_{22})] \\ [a_1] = [min(a_{11}, a_{12}), max(a_{11}, a_{12})] \end{array} \tag{24}$$

After computation, we obtain:

$$\begin{array}{l} [K] = [0.45, 0.6587] \\ [b_2] = [3.336, 3.533] \times 10^{-8} \\ [b_1] = [1.679, 2.152] \times 10^{-4} \\ [a_2] = [2.119, 3.374] \times 10^{-8} \\ [a_1] = [4.607, 8.171] \times 10^{-6} \end{array} \tag{25}$$

In order to increase the stability margin and in order to ensure that the interval model really contains the models of the two piezocantilevers, we propose to extend by 10% the width of each interval parameter in $[G](s, [\mathbf{a}], [\mathbf{b}])$. This choice is a compromise. If the widths are too large, it is difficult to find a controller that respects both the stability and performances of the closed-loop. After extension, the extended parameters finally used to compute the controller are:

$$\begin{array}{l} [K] = [0.4395, 0.6691] \\ [b_2] = [3.326, 3.542] \times 10^{-8} \\ [b_1] = [1.655, 2.175] \times 10^{-4} \\ [a_2] = [2.056, 3.436] \times 10^{-8} \\ [a_1] = [4.428, 8.349] \times 10^{-6} \end{array} \tag{26}$$

4.4 *Specifications*

Piezocantilevers are very resonant (more than 90% of overshoot). Such overshoot is not desirable in micromanipulation and microassembly tasks. Moreover, it is necessary to limit the applied voltage in order to avoid any damage of the actuators. The following specifications are therefore considered:

- closed-loop behavior with negligible (or without) overshoot,
- settling time $tr \leq 8ms$,

- static error $|\epsilon| \leq 1\%$,
- limited input voltage U. We particularly choose a maximal voltage $U^{max} = 2.5V$ for each $1\mu m$ of reference.

4.5 *Computation of the controller*

Wethout loss of generality, we consider a PI (proportional-Integral), i.e. K_d is set to zero in the PID structure:

$$[C](s,[\theta]) = [K_p] + \frac{[K_i]}{s} \tag{27}$$

where the tunable parameters are $[\theta] = [[K_p],[K_i]]$.

Fig. 5-a presents the closed-loop scheme for the controller design, where the weighting function $W_1(s)$ is for the tracking performances and $W_2(s)$ for the input control limitation.

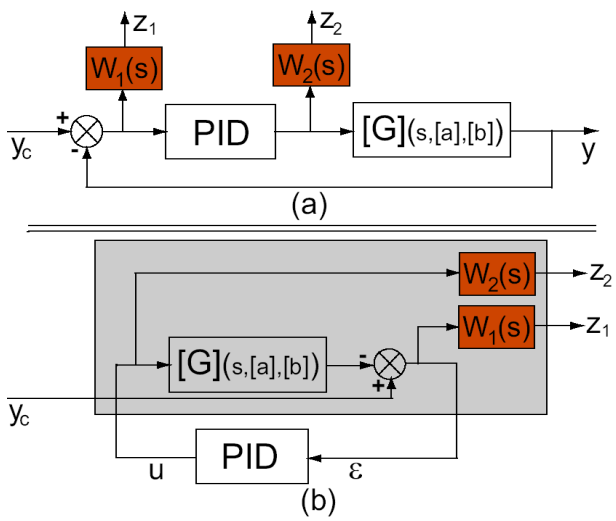

Figure 5. a) The closed-loop scheme with the weighting functions. b) The standard scheme.

From Fig. 5-a, we have:

$$\begin{cases} z_1 = W_1(s)[S](s)y_c \\ z_2 = W_2(s)[C](s,[\theta])[S](s)y_c \end{cases} \tag{28}$$

where as $[S](s) = (1 + [C](s,[\theta])[G](s,[\mathbf{a}],[\mathbf{b}]))^{-1}$ is the sensitivity function.

From (Eq.28), the H_∞ standard problem becomes:

$$\begin{array}{l} |[S](s)| \leq \left|\frac{\gamma}{W_1(s)}\right| \\ |[C](s)[S](s)| \leq \left|\frac{\gamma}{W_2(s)}\right| \end{array} \Leftrightarrow \begin{array}{l} \|W_1(s)[S](s)\|_\infty \leq \gamma \\ \|W_2(s)[C](s)[S](s)\|_\infty \leq \gamma \end{array} \tag{29}$$

where the aim consists to find the set-solution Θ of the PID parameters that ensures the H_∞ performance in (Eq.29), i.e.:

$$\Theta := \left\{ \theta \in [\theta] \left| \begin{cases} \|W_1(s)[S](s)\|_\infty \leq \gamma \\ \|W_2(s)[C](s,[\theta])[S](s)\|_\infty \leq \gamma \end{cases} \right. \right\} \tag{30}$$

The weighting functions were chosen accordingly to the specifications (see Section 4.4). We choose:

$$\begin{cases} W_1(s) = \frac{0.002667s+1}{0.002667s+0.01} \\ \\ W_2(s) = \frac{1}{2.5} \end{cases} \tag{31}$$

Now we set $\gamma = 1$ and we solve the set-inversion problem in (Eq.30).

As described above, the problem (Eq.30) can be easily solved using the recursive algorithm presented in the Table 2. Matlab-Software is used to implement the SIVIA algorithm. We choose an initial box for the controller parameters $[K_{p0}] \times [K_{i0}] = [0.4, 1.2] \times [400, 1200]$. The resulting subpaving is presented in Fig. 6. The dark colored subpaving Θ corresponds to the set parameters $[K_p]$ and $[K_i]$ of the controller (Eq.27) that ensures the performances defined by the H_∞-criterion (Eq.30).

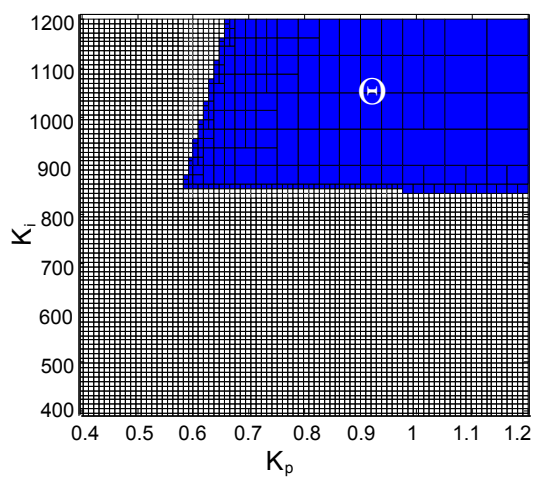

Figure 6. Set-solution of the parameters $[K_p]$ and $[K_i]$ ensuring the wanted performances.

Remark 1 : Any choice of the parameters $[K_p]$ and $[K_i]$ within the dark colored subpaving Θ (see Fig. 6) satisfies the conditions (Eq.30) and consequently ensures the required performances.

Remark 2 : If $\Theta = \emptyset$ (i.e. no solution), the initial box of the parameters $[K_{p0}] \times [K_{i0}]$ must be changed and/or the specifications must be modified (degrade the specifications) and/or the structure of the controller must be modified (increase the order for example).

5 Implementation and experimental tests

The controller $C(s)$ to be implemented is chosen by taking any point parameters K_p and K_i within the set-solution Θ. In this example, we test two point controllers. We choose:

$$C_1(s) = \frac{0.8s+900}{s}$$
$$C_2(s) = \frac{s+1000}{s} \tag{32}$$

In order to prove that the inequalities (Eq.29) is satisfied, the magnitudes of the bounds $\left|\frac{1}{W_1(s)}\right|$ and $\left|\frac{1}{W_2(s)}\right|$ are compared to the magnitudes of the sensitivity function $|[S](s)|$ and of the transfer $|C(s)[S](s)|$ respectively (see Fig. 7) when using the implemented controllers (Eq.32).

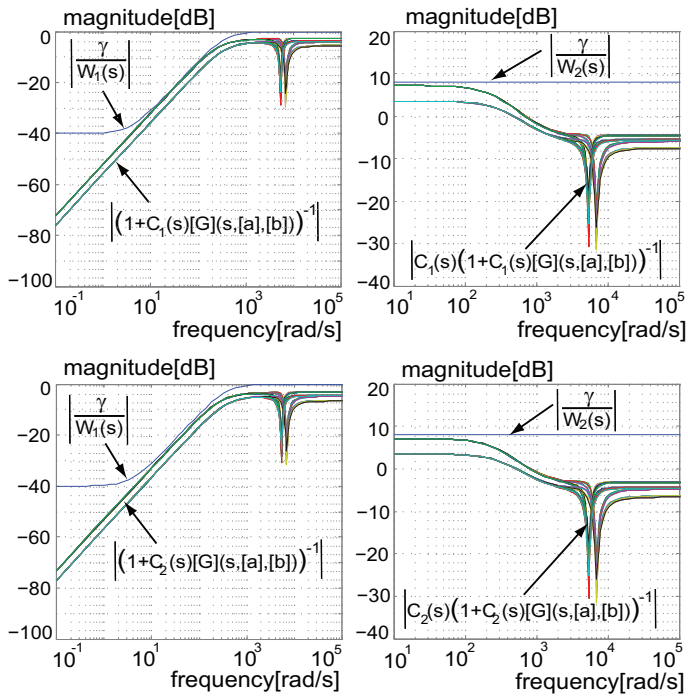

Figure 7. Magnitudes of the bounds compared to the sensitivity $[S](s)$ and to the input transfer $C(s)[S](s)$.

The obtained results in Fig. 7 prove that the magnitudes of $[S](s)$ and $C(s)[S](s)$ are effectively bounded by that of $\frac{1}{W_1(s)}$ and $\frac{1}{W_2(s)}$ respectively when using the two controllers $C_i(s)$ $(i = 1, 2)$. This fact confirms that the specified performances are effectively ensured.

Now, we apply each controller $C_i(s)$ $(i = 1, 2)$ to the piezocantilever when its lengths $l = 16mm$ and when $l = 14mm$. Fig. 8 shows the experimental results when a step reference of $40\mu m$ is applied. As shown on the Fig. 8, the controllers (Eq.32) have played their roles since the closed-loop piezocantilevers satisfy the specifications. Indeed, experimental settling times obtained with $C_1(s)$ and $C_2(s)$ are about $tr_1 = 5.2ms$ when $l = l_1 = 16mm$ (Fig. 8-a) and $tr_2 = 7ms$ when $l = l_2 = 14mm$ (Fig. 8-b). The overshoots and static errors are neglected ($D_{1,2} \approx 0$, $\varepsilon_{1,2} \approx 0 < 1\%$). Furthermore, the maximal voltages U applied to the both piezocantilevers are less than $40 \times 2.5 = 100V$, which should be the limit for a displacement of $40\mu m$. Indeed, the experiments shows that the maximal input voltage is $U^{max} = 97V$.

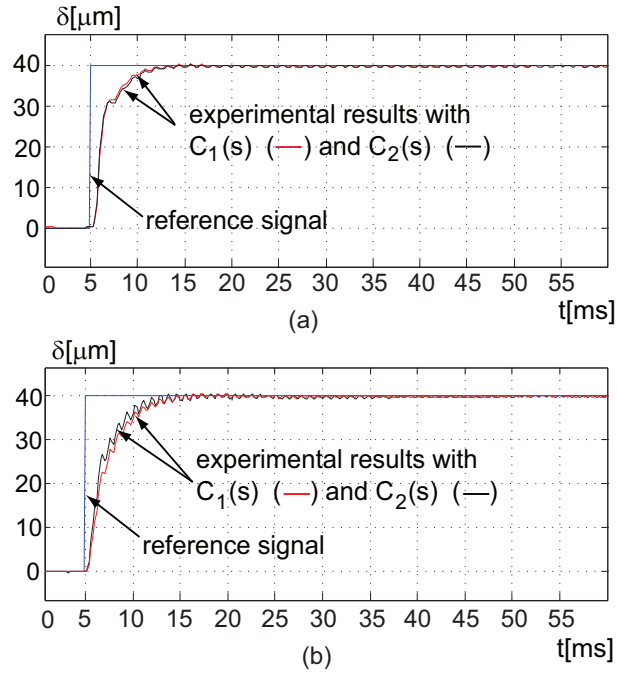

Figure 8. Experimental step responses of the piezocantilever using $C_1(s)$ and $C_2(s)$. a: Piezocantilever with length $l = l_1 = 16mm$. b: Piezocantilever with length $l = l_2 = 14mm$.

6 Conclusion

In this paper, interval techniques have been used to model the parametric uncertainties in piezoelectric actuators. Its main advantage is the ease and natural way to bound these uncertainties. For that, we proposed to combine the H_∞-standard method with interval techniques to derive PID controllers that ensure the performances for the interval model. The main advantage of the proposed control design is the possibility to derive low-order controllers for robust performances objective. The proposed approach was applied to design a robust controller for piezoelectric actuators. The obtained experimental results proved the efficiency of the approach.

The results proposed in this paper were devoted to SISO systems. Future works will include the extension of the proposed approach to multivariable (MIMO) aspect. Indeed, several systems, including piezoelectric actuators, are concerned by multiple degrees of freedom and require MIMO controllers.

References

[1] R. E. Moore, *Interval Analysis*, Prentice-Hall, Englewood Cliffs N. J., 1966.

[2] L. Jaulin, M. Kieffer, O. Didrit, and E. Walter, *Applied Interval Analysis*. Springer, 2001.

[3] E. Walter, L. Jaulin, Guaranteed characterization of stability domains via set inversion, *IEEE Trans. on Autom. Control*, 39(4), 886-889, 1994.

[4] Ye. Smaginaa, Irina Brewerb, Using interval arithmetic for robust state feedback design, *Systems and Control Letters*, 46, 187-194, 2002.

[5] C.-T. Chen, M.-D. Wang, A two-degrees-of-freedom design methodology for interval process systems, *Computers and Chimical Engineering*, 23,1745-1751, 2000.

[6] Micky Rakotondrabe, "Performances inclusion for stable interval systems", ACC, (American Control Conference), pp.4367-4372, San Francisco CA USA, June-July 2011.

[7] J. Bondia, M. Kieffer, E. Walter, J. Monreal and J. Pict'o, "Guaranteed tuning of PID controllers for parametric uncertain systems", *IEEE Conference on Decision and Control*, 2948-2953, 2004

[8] K. Li, Y. Zhang, Interval Model Control of Consumable Double-Electrode Gas Metal Arc Welding Process, *IEEE - Transactions on Automation Science and Engineering (T-ASE)*, 10.1109/TASE, 2009.

[9] S. Khadraoui, M. Rakotondrabe and P. Lutz, "PID-Structured Controller Design for Interval Systems: Application to Piezoelectric Microactuators", *IEEE - ACC, (American Control Conference)*, accepted, San Francisco, California USA, June-July 2011.

[10] S. Khadraoui, M. Rakotondrabe and P. Lutz, "Robust control for a class of interval model: application to the force control of piezoelectric cantilevers", *IEEE - CDC, (Conference on Decision and Control)*, accepted, Atlanta Georgia USA, December 2010.

[11] S. Khadraoui, M. Rakotondrabe and P. Lutz, "Interval Modeling and Robust Control of Piezoelectric Microactuators", *IEEE Transactions on Control System and technology (T-CST)*, DOI.10.1109/TCST.2011.2116789, 2011.

[12] A. Sebastian, A. Pantazi, S. O. R. Moheimani, H. Pozidis, E. Eleftheriou, Achieving Sub-nanometer Precision in a MEMS-Based Storage Device During Self-Servo Write Process, *IEEE Transactions on Nanotechnology*, Volume 7, Number 5, 586-595, 2008.

[13] Micky Rakotondrabe, Cédric Clévy and Philippe Lutz, "Modelling and robust position/force control of a piezoelectric microgripper", *IEEE - CASE, (International Conference on Automation Science and Engineering)*, pp:39-44, Scottsdale AZ USA, Sept 2007.

[14] Micky Rakotondrabe, Yassine Haddab and Philippe Lutz, 'Quadrilateral modelling and robust control of a nonlinear piezoelectric cantilever', IEEE - Transactions on Control Systems Technology (T-CST), Vol.17, Issue 3, pp:528-539, May 2009.

[15] Sen-Jian An, Lin Huang, Enping Wang, On the parametric H_∞ problems of weighted interval plants, *IEEE Transactions on Automatic Control*, Vol.45, 332-335, 2000.

[16] Sen-Jian An, Xiheng Hu, Branka Vucetic, Wanquan Liu, "Vertex results for parametric shifted H_∞ performance of weighted interval plants", *IEEE Conference on Decision and Control*, Vol.5, 4195-4196, 2000.

[17] Wang, L., H_∞ Performance of Interval Systems, *eprint arXiv:math/0211013*, Vol.1, 1-8, 2002.

[18] K. Zhou, J. Doyle, and K. Glover, *Robust and optimal control*, Prentice-Hall, 1996.

[19] Balas, G. J., Doyle, J. C., Glover, K., Packard, A. and Smith, R., μ *-synthesis and synthesis toolbox*, The Mathworks User's Guide-3, 2001.

[20] L. Jaulin and E. Walter, Set inversion via interval analysis for nonlinear bounded-error estimation, *Automatica*, 29(4), 1053-1064, 1993.

[21] Y. Haddab, N. Chaillet and A. Bourjault, "A microgripper using smart piezoelectric actuators", *IEEE/RSJ International Conference on Intelligent Robot and Systems (IROS)*, Takamatsu - Japan, 2000.

[22] J. Agnus, J. M. Breguet, N. Chaillet, O. Cois, P. de Lit, A. Ferreira, P. Melchior, C. Pellet and J. Sabatier, "A smart microrobot on chip: design, identification and modeling", *IEEE/ASME AIM*, Kobe Japan, pp.685-690, 2003.