HAL
open science

Extended component importance measures considering aleatory and epistemic uncertainties

Mohamed Sallak, Walter Schon, Felipe Aguirre

To cite this version:

Mohamed Sallak, Walter Schon, Felipe Aguirre. Extended component importance measures considering aleatory and epistemic uncertainties. IEEE Transactions on Reliability, 2013, 62 (1), pp.49-65. 10.1109/TR.2013.2240888 . hal-00749618

HAL Id: hal-00749618
https://hal.science/hal-00749618v1

Submitted on 8 Nov 2012

HAL is a multi-disciplinary open access archive for the deposit and dissemination of scientific research documents, whether they are published or not. The documents may come from teaching and research institutions in France or abroad, or from public or private research centers.

L'archive ouverte pluridisciplinaire **HAL**, est destinée au dépôt et à la diffusion de documents scientifiques de niveau recherche, publiés ou non, émanant des établissements d'enseignement et de recherche français ou étrangers, des laboratoires publics ou privés.

Extended component importance measures considering aleatory and epistemic uncertainties

Mohamed Sallak, Walter Schön, and Felipe Aguirre

Abstract

In this paper, extended component importance measures (Birnbaum importance, RAW, RRW and Criticality importance) considering aleatory and epistemic uncertainties are introduced. The D-S theory which is considered to be a less restricted extension of probability theory is proposed as a framework for taking into account both aleatory and epistemic uncertainties. The epistemic uncertainty defined in this paper is the total lack of knowledge of the component state. The objective is to translate this epistemic uncertainty to the epistemic uncertainty of system state and to the epistemic uncertainty of importance measures of components. The Affine Arithmetic allows us to provide much tighter bounds in the computing process of interval bounds of importance measures avoiding the error explosion problem. The efficiency of the proposed measures is demonstrated using a bridge system with different types of reliability data (aleatory uncertainty, epistemic uncertainty and experts' judgments). The influence of the epistemic uncertainty on the components' rankings is described. Finally, a case study of a fire-detector system located in a production room is provided. A comparison between the proposed measures and the probabilistic importance measures using two-stage Monte Carlo simulations is also made.

Index Terms

Importance measures, Epistemic uncertainty, Dempster-Shafer theory, Experts' judgments, Affine Arithmetic, Pignistic reliability.

Acronyms

TBM Transferable Belief Model

D-S Dempster-Shafer

RAW Risk Achievement Worth

RRW Risk Reduction Worth

CR Criticality importance

M. Sallak, W. Schön and F. Aguirre are with the Computer Engineering Department, Compiegne University of Technology, Heudiasyc Laboratory, UMR 6599, CNRS, Research Center of Royallieu, France (e-mail: sallakmo@utc.fr).

BBA	Basic Belief Assignment

Notation

Bel	Belief measure
Pl	Plausibility measure
m^X	BBA on the frame of discernment X
F_i	Failure state of component i
W_i	Working state of component i
R_S	System's reliability
$BetR_S$	Pignistic system's reliability
Q_S	System's unreliability
$BetQ_S$	Pignistic system's unreliability
I^B	Birnbaum importance measure
I^B_{Bet}	Birnbaum pignistic importance measure
I^{RAW}	RAW importance measure
I^{RAW}_{Bet}	RAW pignistic importance measure
I^{RRW}	RRW importance measure
I^{RRW}_{Bet}	RRW pignistic importance measure
I^{CR}	CR importance measure
I^{CR}_{Bet}	CR pignistic importance measure
k	Conflict factor between BBAs
d	Distance between BBAs
S	Similarity function
$S_i(t)$	Survival function of the ith component
n	Number of components
β_{i}	Shape parameter in $S_i(t)$
η_{i}	Scale parameter in $S_i(t)$

I. Introduction

AN important problem in reliability theory is to identify components within the system that more significantly influence the system's behavior with respect to reliability or availability. As we can not improve all components at one time to improve system's reliability, priority should be given to components that are more important. In that way, reliability managers can prioritize where investments should be made to guarantee the maximum increase of reliability considering the whole system.

Historically, Birnbaum [1] was the first to quantify the contributions of components' reliability to binary coherent systems' reliability. A weakness of Birnbaum importance measure is that it does not depend on the component's reliability. Therefore, two components may have a similar measure value, although their current levels of reliability could differ substantially. The Criticality importance measure (CR) is another widely used measure [2]. This is a natural extension of the Birnbaum measure which includes the component's unreliability. Two other measures that are widely used for ranking the components' importance are the Risk Achievement Worth (RAW) and the Risk Reduction Worth (RRW) [3]. Andrews and Beeson [4] extended the Birnbaum importance measure to promote the importance measures of components in non-coherent systems. However, these traditional importance measures were only defined for crisp values of components' reliability data. This is why several uncertainty importance measures were introduced. Borgonovo [5], and Modarres and Aggarwal [6] studied the influence of uncertainty in importance measures results. Borgonovo [7] proposed also a common categorization of uncertainty measures based on variance and moment indicators. The first family of measures is based on the correlation between input variables and the output. The second category of measures is based on the variance of the probability distribution. The third category of measure is the moment-independent sensitivity indicators. However, these measures assume a choice of probability density functions which can make the results imprecise or even erroneous if there is not enough reliability data. Recently, Borgonovo and Smith [8] proposed an epistemic RAW and studied its properties for series and parallel systems. In fuzzy set theory, fuzzy importance measures based on structural importance were introduced by Furuta and Shiraishi [9]. Liang and Wang [10] developed a fuzzy measure based on the use of triangular fuzzy numbers with maximal and minimal sets. Guimarees *et al.* [11] presented a fuzzy measure using the Euclidean distance between two fuzzy sets. Sallak *et al.* [12] proposed a fuzzy uncertainty measure based on the use of fuzzy triangular numbers in order to reduce uncertainty in the evaluation of Safety Integrity Levels (SILs). We should note that, in the case of no prior information about components reliabilities, we can use the structural importance which is not take into account the reliabilities of the system components because the importance of a component is measured by the number of times it appears in the reliability models [13], [14]. To our knowledge, there is no work treating the use of importance measures in D-S theory.

In this paper, importance measures such as Birnbaum, RAW, RRW and CR are extended to make them

compatible with D-S theory for taking into aleatory and epistemic uncertainties. The use of D-S theory is due to the fact that during the last years, the reliability assessment community recognized that the distinction between different types of uncertainties plays an important role in reliability evaluation [15], [16]. Uncertainty can be considered essentially of two types: aleatory uncertainty which arises from natural stochasticity or environmental variation across space or through time and epistemic uncertainty which arises from incompleteness of knowledge or data [17]. The distinction is useful because epistemic uncertainty can be reduced by acquiring knowledge on the studied system. Furthermore, it has been proved that uncertainties in reliability and risk assessments are mainly epistemic [18].

In case of large amount of reliability data, the classical probabilistic approach was widely used to manage uncertainties in risk and reliability assessments [19]. This approach was based on the definition given by Laplace of the probability of an event as the ratio of the number of cases favorable to it, to the number of all possible cases when all cases are equally possible [20]. The frequentist probabilistic approach introduced by Venn [21] which defined the event probability as the limit of its relative frequency in a large number of trials was also widely used. However, in the case of components that fail only rarely (nuclear systems, chemical processes, railway systems, etc.) or components that have not been operated long enough to generate a sufficient quantity of reliability data, expert judgment is required. Several methods were proposed to manage uncertainties in expert judgment such as Bayesian approach, interval approach, evidence theory, possibility theory, etc. In the framework of probabilities, De Finetti [22] introduced the subjective probabilities of an event to indicate the degree to which the expert believes it. Kaplan and Garrik [23] introduced the concept of probability of frequency to expand their definition of risk. Pate-Cornell [24] used the level six of its uncertainty analysis to obtain a family of risk curves in presence of both aleatory and epistemic uncertainties. The Bayesian approach proposed the use of subjective probabilities to represent expert judgment. The probability distributions representing the aleatory uncertainties are first proposed. The epistemic uncertainties about the parameter values of the distributions are then represented by prior subjective probability distributions [23]. The equation of Bayes is used to compute the new epistemic uncertainties in terms of the posterior distributions in case of new reliability data. Finally, the predictive distributions of the quantities of interest are derived by using the total probability law. The predictive distributions are subjective but they also take into account the aleatory uncertainties represented by the prior probability models [25]. However, There are some critics about the Bayesian approach and representing epistemic uncertainties using probabilities. These critics was exposed particularly by Walley [26], and Caselton and Luo [27]. When there is few information about the value of a parameter α, the choice of probability distribution may not be appropriate. For example, there is a difference between saying that all that is known about the parameter α is that its value is located somewhere in an

interval $[x, y]$ and saying that a uniform distribution on [x,y] characterizes degrees of belief with respect to where the value of this parameter is located in the interval $[x, y]$ [28], [19]. Furthermore, in a situation of ignorance a Bayesian approach must equally allocate subjective probabilities over the frame of discernment. Thus there is no distinction between uncertainty and ignorance.

A number of alternatives theories based on different notions of uncertainty were proposed. The evidence theory also known as the Dempster-Shafer or belief functions theory is a generalization of the Bayesian theory of subjective probability. Whereas the Bayesian theory requires probabilities for each question of interest, belief functions allow us to base degrees of belief for one question on probabilities for a related question [29]. To illustrate the idea of obtaining degrees of belief for one question from subjective probabilities for another, we propose an example in risk assessment inspired from the example of limb given by Shafer. Suppose we have subjective probabilities for the reliability of a risk expert A. The probability that A is reliable is 0.75, and the probability that A is not reliable is 0.25. The risk expert A reports us that a component i is failed. This information which must be true if A is reliable, is not necessarily false if A is not reliable. The risk expert testimony justifies a 0.75 degree of belief that the component i is failed, but only a 0 degree of belief (not a 0.25 degree of belief) that the component i is not failed. This value does not mean that we are sure that the component i is failed, as a zero probability would. It means that the risk expert's testimony gives us no reason to believe that the component i is failed. The 0.75 and the 0 constitute a belief function. Thus there is no requirement that belief not committed to a given proposition should be committed to its negation. The second point of evidence theory is that belief measures of uncertainty may be assigned to overlapping sets and subsets of hypotheses, events or propositions as well as to individual hypothesis. D-S theory which can be considered as an alternative approach to represent uncertainties has gained an increasing amount of attention both from the theoretical and the applied point of view [30], [31], [32], [33]. In a finite discrete space, D-S theory is a generalization of probability theory where probabilities are assigned to sets instead of mutually exclusive singletons. This theory is still a young field compared to other theories and its main application is data fusion.

II. D-S and reliability assessment

D-S is a theory of uncertainty that was first developed by Dempster [34] and extended by Shafer [35]. The idea of using D-S theory in reliability assessment was introduced by Dempster and Kong [36]. The D-S theory which is considered to be a less restricted extension of probability theory is proposed in this paper as a framework for taking into account both aleatory and epistemic uncertainties.

A. Basic concepts

The frame of discernment X is the set of all hypotheses for which the information sources can provide evidence. A Basic Belief Assignment (BBA) on a frame of discernment X is a function $m^X : 2^X \rightarrow [0,1]$ which maps beliefs masses on subsets of events as follows:

$$\sum_{A \in 2^X} m^X(A) = 1 \tag{1}$$

A focal element is a subset X of the frame of discernment, such that $m(X) > 0$. If all the focal elements are singletons (i.e. one-element subsets of the frame of discernment), then we speak about a Bayesian belief function. The two important measures of uncertainty provided by D-S theory are called belief and plausibility functions. They are defined by:

$$Bel(A) = \sum_{B \subseteq A} m^X(B), \quad Pl(A) = \sum_{B \cap A \neq \emptyset} m^X(B) \quad \forall\, A \subseteq X,\ \forall\, B \subseteq X \tag{2}$$

The interval $[Bel(A), Pl(A)]$ represents the uncertainty of A.

For BBAs defined on the Cartesian product $\Omega_x \Omega_y$. The formulas of marginal BBA $m^{\Omega_x \Omega_y \downarrow \Omega_x}$ defined on a frame of discernment Ω_x and the vacuous extension defined on the Cartesian product $\Omega_x \Omega_y$ are given in Appendices. The two most known rules of combination are the conjunctive $\textcircled{\cap}$ and disjunctive $\textcircled{\cup}$ rules [35]. The Dempster rule is a widely used rule calculated from the conjunctive combination of two BBAs followed by normalization. The formulas of these three rules are given in Appendices. Depending on the reliability of experts and the conflict between them, several other combination rules were defined in D-S theory (Yager rule [37], Dubois and Prade rule [38], Cautious rule [39], etc.). For more details, see [34], [35], [40], [39].

B. Reliability assessment

In our reliability model, the frame of discernment X_i of a component i is defined by: $X_i = \{F_i, W_i\}$ where F_i and W_i denote the failure and the working states of the component i. An expert α should use an interval $[Bel(W_A), Pl(W_A)]$ to represent its interval belief that the component A is in the working state at time t. From this, we can say that the values of $Bel(\{W_A\})$ and $Pl(\{W_A\})$ are going to bound the correct value to be in the working state which represents the aleatory uncertainty concerning the functioning state of the component A. Moreover, the epistemic uncertainty is equal to $Pl(\{W_A\}) - Bel(\{W_A\})$ which represents the length of the interval $[Bel(W_A), Pl(W_A)]$. It represents the part of the belief expert allocated to the lack of knowledge concerning the state of the component A. Thus we can say that aleatory and epistemic uncertainty

are treated separately in our approach. The BBAs about component A are computed as follows

$$m_{\alpha}^{X_A}(\{W_A\}) = Bel(\{W_A\})$$
$$m_{\alpha}^{X_A}(\{F_A\}) = 1 - Pl(\{W_A\})$$
$$m_{\alpha}^{X_A}(\Omega_A) = Pl(\{W_A\}) - Bel(\{F_A\})$$

Thus, unlike the probabilistic relationship between a set and its complement, the belief assigned to a set does not uniquely determine the belief assigned to its complement. Similarly, the plausibility assigned to a set does not uniquely determine the plausibility assigned to its complement [28].

In order to evaluate the whole reliability of a system S composed of n components $\{1, 2, ..., n\}$ in a given configuration, we use the BBA defined as follows:

$$m^{X_S} = (m^{X_1\uparrow X_1\times X_2...\times X_n\times X_S} \oplus m^{X_2\uparrow X_1\times X_2...\times X_n\times X_S} \oplus ... \oplus m^{X_n\uparrow X_1\times X_2...\times X_n\times X_S} \oplus m_{Config}^{X_1\times X_2...\times X_S})^{\downarrow X_S} \quad (3)$$

The BBA $m_{Config}^{X_1\times X_2...\times X_n\times X_S}$ represents the relation between the system S and its components (structure function). Then, belief and plausibility measures are obtained from m^{X_S}. The reliability of the system R_S is obtained by:

$$R_S = [\underline{R_S}, \overline{R_S}] = [Bel(\{W_S\}), Pl(\{W_S\})] \quad (4)$$

For example, let us consider a system S with two components 1 and 2 in parallel. For simplicity we consider that the system S and its components have two states 0_i and 1_i. Let us suppose that Expert 1 asserts an interval belief $[0.3, 0.9]$ that component 1 is working at time t. Expert 2 asserts an interval belief [0.4,1] that component 1 is working at time t. Dempster's rule of combination applied to the BBAs from experts 1 and 2 gives the new BBAs shown in Table I. Also, since BBAs have been combined the level of conflict k can be gauged. In this case $k = 0.04$ indicating a minor conflict in the evidence from the two experts. The same reasoning is done to obtain BBA of component 2. Then, we use the vacuous extension to extend m^{X_1} and m^{X_2} to the product space $X_1 \times X_2 \times X_S$ and we combine the obtained BBAs using the Dempster rule. The resulting BBAs are combined with $m_{Config}^{X_1\times X_2\times X_S}$. For parallel configuration we have $m_{Parallel}^{L_1\times L_2\times L_S}(\{(1_1, 1_2, 1_S), (0_1, 0_2, 0_S), (0_1, 1_2, 1_S), (1_1, 0_2, 1_S)\}) = 1$. To obtain the BBAs of the system S the final result is marginalized on L_S. Belief and plausibility functions are then computed to obtain upper and lower bounds of system's reliability.

C. Construction of BBAs

Within the framework of DS theory, the construction of BBAs remains an important problem which can considerably influence final results. Nevertheless, there is very few works concerning the construction of BBAs

	$\{0_1\}$	$\{1_1\}$	$\{0_1, 1_1\}$
Expert 1	0.1	0.3	0.6
Expert 2	0	0.4	0.6
Expert 1 $\oplus$ Expert 2	0.0625	0.5625	0.3750

TABLE I: Dempster combination of BBAs concerning component 1

from reliability data [41], [33]. The problem of elicitation of experts' judgments has long been addressed in the probability theory framework related to reliability and risk assessments. In [42], Ouchi reviews the literature on the use of expert opinion in probabilistic risk analysis. However, these elicitation techniques are not suited to other uncertainty theories (possibility theory, D-S theory, etc.). This section is mainly dealing with the elicitation process of experts' judgments in D-S theory. The integration of experts' reliability will be presented. The dependence of BBAs on the number of components' failures will also be discussed.

1) Expert elicitation using reliability parameters: Let us consider a component i with a constant failure rate λ. The reliability expert 1 tells us that $\lambda \in \left[\underline{\lambda}, \overline{\lambda}\right]$ [41]. t represents the amount of time that the components must function for the system to succeed and w is the lifetime of the component. Because, the failure rate is constant, w has an exponential distribution with scale parameter $\frac{1}{\lambda}$. The component will fail when $w \leq t$ or $\lambda \geq \frac{1}{t}$. If $\frac{1}{t} \leq \underline{\lambda}$, the component will certainly fail, thus, the proposition totally agrees with the event F_i so we represent it by $Bel_1(\{F_i\}) = 1 - e^{-\underline{\lambda}t}$. Similarly if $\frac{1}{t} \leq \overline{\lambda}$, the component may fail, thus, the proposition totally or partially agrees with the event F_i so we represent it by $Pl_1(\{F_i\}) = 1 - e^{-\overline{\lambda}t}$. Finally, the obtained BBAs are:

$$m_1^{X_i}(\{W_i\}) = e^{-\overline{\lambda}t}$$

$$m_1^{X_i}(\{F_i\}) = 1 - e^{-\underline{\lambda}t}$$

$$m_1^{X_i}(\{W_i, F_i\}) = e^{-\underline{\lambda}t} - e^{-\overline{\lambda}t}$$

2) Discounting: It sometimes occurs that an expert (or a source of information) induces a BBA m^{Ω}, but there is some doubt regarding the reliability of that expert. It may be useful to discount this BBA m^{Ω} by some factor $\delta \in [0, 1]$. When the BBA is discounted, the remaining assignment is applied to the combination of all options in the frame of discernment Ω. This discounting operation was introduced by Shafer [35]. The details of this operation are given in the Appendix.

3) Dependence of BBAs on the number of components' failures: This subsection describes how to build belief function models for situations with unknown parameter of probability distribution.

Kozine and Filimonov [43] asked how to model the dependence of beliefs functions on the number of occurrences that have happened and how to embed this dependence on the number of occurrences in the

BBA m. Dempster proposed a model for an unknown parameter of binomial distribution [44]. Let us consider the observations $(X_1, ..., X_n)$ which come from a binomial process with an unknown failure rate λ. X_i is equal to 1 if the component failed on the ith demand. Consider a_i be a series of independent pivotal random values which have a uniform distribution on the interval $[0, 1]$, and consider the equation hold:

$$X_i = 1 \Leftrightarrow a_i \leq \lambda \tag{5}$$

This equation presents a logical restriction on the possible values of the triples (X_i, a_i, λ). When the a_i's are marginalized out, the result is a binomial model over the X_i's.

To find the margin over λ, first arrange the pivotal variables in order, $a_0 \leq a_1 \leq ... \leq a_{n+1}$ where $a_0 = 0$ and $a_{n+1} = 1$. Let X be the total number of failures observer in the n demand. It must be true that $\underline{a} = a_X \leq \lambda \leq \overline{a} = a_{X+1}$. The order statistics from a uniform distribution follow a beta distribution. Then the joint belief function over λ is the mass density function:

$$m(\underline{a}, \overline{a}) = \frac{n!}{(k-1)!(n-k-1)!}\underline{a}^{k-1}(1-\overline{a})^{n-k-1} \qquad 0 < k < n; \tag{6}$$

$$m(0, \overline{a}) = n(1-\overline{a})^{n-1} \qquad k = 0;$$

$$m(\underline{a}, 1) = n\underline{a}^{n-1} \qquad k = n;$$

For any set B we can get the Bel and Pl functions that $\lambda \in B$ by:

$$Bel(B) = \int\int_{[a,b]\subseteq B} m(a,b)dadb \tag{7}$$

$$Pl(B) = \int\int_{[a,b]\cap B\neq\emptyset} m(a,b)dadb$$

Under consideration that B is an interval we obtain:

$$Bel(B) = \frac{k}{n+1} \tag{8}$$

$$Pl(B) = \frac{k+1}{n+1}$$

This method was also applied in the case of Poisson processes, the uniform pivotal variables a_i become γ waiting time distributions. Almond has applied Dempster's works in some reliability problems [41]. For more details see [44], [41].

D. Computational complexity

The computational complexity of reasoning within the D-S theory of evidence is one of the main points of criticism this formalism has to face. In the proposed reliability model, the computational cost of the model grows exponentially with the size of the studied system. Three operations are used: extension, projection and combination. Dempster's rule of combination requires significantly large computational cost with the increasing of the focal elements cardinality. In the case of binary systems, for each component, there are two elements in the frame of discernment (working and failure: n=2 is the cardinality of the frame of discernment), thus the BBA has $nf = 2^n - 1 = 3$ focal elements (empty-set here is excluded). Furthermore, the combination of two BBAs requires the computation of up to $2^{nf+1} - 2$ operations (intersections). Then the total number of combination operations for nc components (we add also the BBA of the system configuration) is $N_{comb} = (2^{nf+1} - 2) * C^2_{nc+1}$. The total number of extensions is $N_{ext} = (nc+1) * (2^{nf+1} - 2)$. The total number of projection is $N_{ext} = N_{comb} * nf$. Finally, the total number of operation is $N_{Op} = N_{comb} + N_{ext} + N_{proj}$. Thus, the DS approach can be applied on large binary coherent systems and the maximum number of system'components to be analyzed in a reasonable time is about 100 components.

However, the DS approach can be more time consuming when used to study reliability of multi-state systems. In order to optimize the D-S operations and saving time and space, some computation algorithms were given in [45], [41]. The idea of these algorithms lies in doing local calculations in smaller product spaces so as to reduce the exponential growth of the D-S. On the other hand, Smets [29] introduced a different approach that propagates conditional belief functions over a directed acyclical network called belief network. The advantage is that the edges of the graphs are weighted by conditional belief functions and not by joint belief functions over a product space, thus, it's a more optimal method in terms of computational cost. The approach is less general but, the loss of generality does not affect the reliability analysis. Smets [46] introduced matrix calculus using the Möbius transformation to the D-S. This approach simplifies greatly the development of software and optimizes the computational time. Reducing the number of focal elements of the BBAs under consideration while retaining the essence of the information they represent is also an other way to overcome the computational complexity.

III. Interval and Affine Arithmetics

A. Interval Arithmetic (IA)

In order to define importance measures based on upper and lower values of reliability defined in Eq. 4, we need to use interval arithmetic operations. Interval Arithmetic (IA) was first proposed by Moore [47]. An

interval number $[\underline{x}, \overline{x}]$ is the set of real numbers x such that $\underline{x} \leq x \leq \overline{x}$ where $\underline{x}$ and $\overline{x}$ are elements of the set of real numbers $\mathbb{R}$ with $\underline{x} \leq \overline{x}$. Addition, subtraction, multiplication, and division of intervals are defined in Appendices. However, when a given variable occurs more than once in an interval computation, it is treated as a different variable in each occurrence. This effect is called the dependency problem. Therefore, standard interval arithmetic provides guaranteed bounds but they are often too conservative [48]. Several techniques have been developed to avoid the dependence problems and hence reduce the overestimation: Quadratic approximation and Gauss Transformation, Deconvolution, Generalized Interval Arithmetic, Modal Interval, Central Forms and Affine Arithmetics.

B. Affine Arithmetic (AA)

Affine arithmetic (AA) was introduced in 1993 by Comba and Stolfi [49] and developed by De Figueiredo and Stolfi in [50]. AA is an extension of IA obtained by considering affine forms in place of intervals. This method is similar to standard IA but, in addition, it keeps track of correlations between quantities during the computations. This extra information allows us to provide much tighter bounds in the computing process avoiding the error explosion problem. In AA, each quantity x is represented by an affine form $\hat{x}$, which is a first-degree polynomial:

$$\hat{x} = x_0 + x_1\epsilon_1 + ... + x_n\epsilon_n \tag{9}$$

Each noise symbol ϵ_i is a symbolic real variable whose value is only known to lie in the interval $U = [-1, +1]$ and is independent from the other noise symbols. The coefficients x_i are known real values. The coefficient x_0 is called the central value of $\hat{x}$. The coefficients $x_1, ..., x_n$ are called the partial deviations associated with the noise symbols $\epsilon_1, ..., \epsilon_n$ in x. Conversions between affine forms and intervals are performed as follows:

- Affine Form $\rightarrow$ Interval:

$$\hat{x} = x_0 + \sum_{i=1}^{n} x_i\epsilon_i \quad \rightarrow x = [x_0 - \sum_{i=1}^{n} |x_i|, x_0 + \sum_{i=1}^{n} |x_i|] \tag{10}$$

- Interval $\rightarrow$ Affine Form:

$$x = [\underline{x}, \overline{x}] \rightarrow \hat{x} = \frac{\underline{x} + \overline{x}}{2} + \frac{\overline{x} - \underline{x}}{2}\epsilon \tag{11}$$

where ϵ is a new variable.

Extending non-affine operations requires that we use good affine approximation to the exact result and append an extra term to bound the error of this approximation. Different approximation methods can be used for the affine forms of several functions: Optimal (Chebyshev), Min-range and Interval approximation. All these techniques assume that the function is at least bounded on the argument interval. The Chebyshev

approximation provides the best approximation result. However, its computation is prohibitive expensive [51].

IV. Importance measures using the D-S theory

The aim of this section is to introduce importance measures using the D-S theory. This will be done by introducing new definitions of usual probabilistic importance measures. These new measures will be first used to rank the importance of components in presence of only aleatory uncertainty, both aleatory and epistemic uncertainties, and in the case when many experts' judgments must be taken into account. Then, the measures will be used to reflect to what degree the epistemic uncertainties on the components' reliability influence the components' rankings. In this work, the following key assumptions are taken into account:

- System and components are allowed to take only two possible states: either working or failed.
- Component failures are statistically independent. Failure of one component does not impact the failures of the other components.
- The structure function is coherent. That is, improvement of component states cannot damage the system.
- The components are not repairable.

A. Interval Definitions

In 1969, Birnbaum first introduced the concept of components' reliability importance [1]. This measure was defined as the probability that a component i is critical to system failure, *i.e.* when component i fails it causes the system to move from a working to a failed state. The Birnbaum's importance measure of a component i can be interpreted as the rate at which the system's reliability improves as the reliability of component i is improved. Analytically, Birnbaum's importance interval measure of a component i can be defined using D-S theory by:

$$\begin{aligned}[I^B(i)] &= [Bel(\{W_S\}|\{W_i\}), Pl(\{W_S\}|\{W_i\})] - [Bel(\{W_S\}|\{F_i\}), Pl(\{W_S\}|\{F_i\})] \\ &= [\underline{R}_{S|W_i}, \overline{R}_{S|W_i}] - [\underline{R}_{S|F_i}, \overline{R}_{S|F_i}]\end{aligned}$$

Where $Bel(\{W_S\}|\{W_i\})$ and $Pl(\{W_S\}|\{W_i\})$ denote respectively the belief and plausibility measures that the system is functioning when it is known that component i is in a working state. Whereas $Bel(\{W_S\}|\{F_i\})$ and $Pl(\{W_S\}|\{F_i\})$ denote respectively the belief and plausibility measures that the system is functioning when component i is in a failed state.

In order to evaluate $[I^B(i)]$ using AA, we first need to define the affine form $\hat{I}^B(i)$ of the quantity $I^B(i)$. This will be done by writing the affine forms of the quantities $R_{S|W_i}$ and $R_{S|F_i}$, and then evaluating the affine form of their difference.

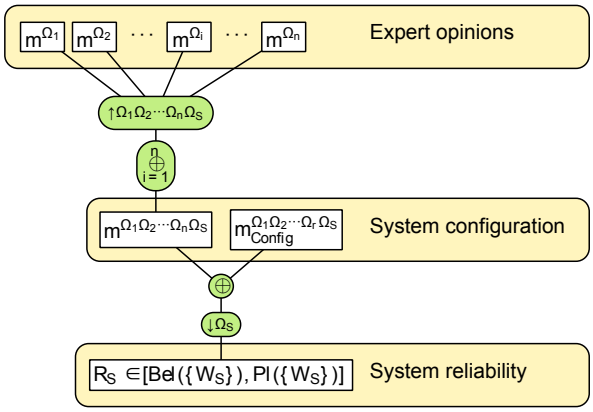

Fig. 1: Algorithm to compute reliability of systems

The affine forms of the quantities $R_{S|W_i}$ and $R_{S|F_i}$ are respectively: $\hat{R}_{S|W_i} = R_{S|W_i,0} + R_{S|W_i,1}\epsilon_1$ and $\hat{R}_{S|F_i} = R_{S|F_i,0} + R_{S|F_i,2}\epsilon_2$ where $R_{S|W_i,0} = \frac{\underline{R}_{S|W_i}+\overline{R}_{S|W_i}}{2}$, $R_{S|W_i,1} = \frac{\overline{R}_{S|W_i}-\underline{R}_{S|W_i}}{2}$, $R_{S|F_i,0} = \frac{\underline{R}_{S|F_i}+\overline{R}_{S|F_i}}{2}$ and $R_{S|F_i,2} = \frac{\overline{R}_{S|F_i}-\underline{R}_{S|F_i}}{2}$. It follows that, the affine form of the quantity $I^B(i)$ is defined by:

$$\begin{aligned} \hat{I}^B(i) &= \hat{R}_{S|W_i} - \hat{R}_{S|F_i} \\ &= I_0^B(i) + I_1^B(i)\epsilon_1 + I_2^B(i)\epsilon_2 \end{aligned} \tag{12}$$

where

$I_0^B(i) = R_{S|W_i,0} - R_{S|F_i,0}$

$I_1^B(i) = R_{S|W_i,1}$

$I_2^B(i) = R_{S|F_i,2}$

The Birnbaum's importance measures obtained using AA and IA methods are expressed in table II. Note that in the case of Birnbaum measures, AA and IA give the same results because we use only subtraction operations. In order to compute for example the Birnbaum measure of component k, we first assume that $m(\{W_k\}) = 1$. Then all the masses are combined so as to obtain at the end the system's reliability. First, each BBA on Ω_k must be extended to the product space $\Omega_1\Omega_2\cdots\Omega_n\Omega_S$. Then, all of the components' reliability masses and the system's configuration mass m^{Ω}_{Config} are combined using combination rule. Finally, the obtained mass is projected to the frame of discernment of the system's states Ω_s. This process is represented by Figure 1 and repeated for the hypothesis $m(\{W_k\}) = 0$. Then, using AA operations we compute the difference between system's reliability in the two cases in order to obtain the importance measure of component k.

The RAW is defined as the ratio of the conditional system's unreliability if component i is failed with the system's unreliability. This measure quantifies the maximum possible percentage increase in system unreliability generated by a particular component. Using the D-S theory, the RAW of a component i can be defined

TABLE II: Interval and pignistic importance measures

	Interval form using AI	Interval form using AA	Pignistic form
Birnbaum	$[\underline{R}_{S\|W_i}, \overline{R}_{S\|W_i}] - [\underline{R}_{S\|F_i}, \overline{R}_{S\|F_i}]$	$[I_0^B(i) - h_i^B, I_0^B(i) + h_i^B]$ $h_i^B = \|I_1^B(i)\| + \|I_2^B(i)\|$ $I_0^B(i) = R_{S\|W_i,0} - R_{S\|F_i,0}$ $I_1^B(i) = R_{S\|W_i,1}$ $I_2^B(i) = R_{S\|F_i,2}$	$\|Bet(R_S\|\{W_i\}) - Bet(R_S\|\{F_i\})\|$
RAW	$\frac{[\underline{Q}_{S\|F_i}, \overline{Q}_{S\|F_i}]}{[\underline{Q}_S, \overline{Q}_S]}$	$[I_0^{RAW}(i) - h_i^{RAW}, I_0^{RAW}(i) + h_i^{RAW}]$ $h_i^{RAW} = \|I_1^{RAW}(i)\| + \|I_2^{RAW}(i)\|$ $+\|I_3^{RAW}(i)\| + \|I_4^{RAW}(i)\|$ $I_0^{RAW}(i) = \alpha Q_{S\|F_i,0} Q_{S,0} + \beta Q_{S\|F_i,0}$ $I_1^{RAW}(i) = Q_{S\|F_i,1}(\alpha Q_{S,0} + \beta)$ $I_2^{RAW}(i) = \alpha Q_{S,2} Q_{S\|F_i,0}$ $I_3^{RAW}(i) = \delta Q_{S\|F_i,0}$ $I_4^{RAW}(i) = \alpha Q_{S,2} Q_{S\|F_i,1} + \delta Q_{S\|F_i,1}$ $\alpha = -1/\underline{Q}_S \overline{Q}_S$ $\delta = \|(\beta_1 - \beta_2)/2\|$ $\beta_1 = 1/\underline{Q}_S - \alpha \underline{Q}_S$ $\beta_2 = 1/\overline{x'} - \alpha \overline{x'}$ $x' = \sqrt{-1/\alpha}$ $\beta = (\beta_1 + \beta_2)/2$	$\frac{Bet(Q_S\|\{F_i\})}{BetQ_S}$
RRW	$\frac{[\underline{Q}_S, \overline{Q}_S]}{[\underline{Q}_{S\|W_i}, \overline{Q}_{S\|W_i}]}$	$[I_0^{RRW}(i) - h_i^{RRW}, I_0^{RRW}(i) + h_i^{RRW}]$ $h_i^{RRW} = \|I_1^{RRW}(i)\| + \|I_2^{RRW}(i)\|$ $+\|I_3^{RRW}(i)\| + \|I_4^{RRW}(i)\|$ $I_0^{RRAW}(i) = \alpha Q_{S,0} Q_{S\|W_i,0} + \beta Q_{S,0}$ $I_1^{RRW}(i) = Q_{S,0}(\alpha Q_{S\|W_i,0} + \beta)$ $I_2^{RRW}(i) = \alpha Q_{S\|W_i,2} Q_{S,0}$ $I_3^{RRW}(i) = \delta Q_{S,0}$ $I_4^{RRW}(i) = \alpha Q_{S\|W_i,2} Q_{S,1} + \delta Q_{S,1}$	$\frac{BetQ_S}{Bet(Q_S\|\{W_i\})}$
CR	$[I^B(i)] \frac{[\underline{Q}_i, \overline{Q}_i]}{[\underline{Q}_S, \overline{Q}_S]}$	$[I_0^{'}(i) I_0^B(i) - h_i^{CR}, I_0^{'}(i) I_0^B(i) + h_i^{CR}]$ $h_i^{CR} = \|I_0^{'}(i)\| \sum_{j=5}^{6} \|I_j^B(i)\| + \|I_0^B(i)\| \sum_{j=1}^{4} \|I_j^{'}(i)\|$ $+(\sum_{j=1}^{4} \|I_j^{'}(i)\|)(\sum_{j=1}^{2} \|I_j^B(i)\|)$ $I_0^{'}(i) = \alpha Q_{i,0} Q_{S,0} + \beta Q_{i,0}$ $I_1^{'}(i) = Q_{i,0}(\alpha Q_{S,0} + \beta)$ $I_2^{'}(i) = \alpha Q_{S,2} Q_{i,0}$ $I_3^{'}(i) = \delta Q_{i,0}$ $I_4^{'}(i) = \alpha Q_{S,2} Q_{i,1} + \delta Q_{i,1}$	$I^B(i) \frac{BetQ_i}{BetQ_S}$

by:

$$\begin{aligned}[I^{RAW}(i)] &= \frac{[Bel(\{F_S\}|\{F_i\}), Pl(\{F_S\}|\{F_i\})]}{[Bel(\{F_S\}), Pl(\{F_S\})]} \\ &= \frac{[\underline{Q}_{S|F_i}, \overline{Q}_{S|F_i}]}{[\underline{Q}_S, \overline{Q}_S]}\end{aligned}$$

where $Bel(\{F_S\}|\{F_i\})$ and $Pl(\{F_S\}|\{F_i\})$ denote the belief and plausibility measures that the system is in a failed state when it is known that component i is in a failed state.

The RRW is the ratio of the system's unreliability with the conditional system's unreliability if component i is replaced by a perfect component [52], [53], [16]. Using D-S theory, the RRW of a component i is defined by:

$$\begin{aligned}[I^{RRW}(i)] &= \frac{[Bel(\{F_S\}), Pl(\{F_S\})]}{[Bel(\{F_S\}|\{W_i\}), Pl(\{F_S\}|\{W_i\})]} \\ &= \frac{[\underline{Q}_S, \overline{Q}_S]}{[\underline{Q}_{S|W_i}, \overline{Q}_{S|W_i}]}\end{aligned}$$

Whereas the Birnbaum importance provided the probability that a given component would be responsible for the failure at time t, CR (also called the Criticality measure of Lambert) is another well-known measure used to determine the probability that the given component was responsible for system failure before time t [2]. Thus the CR measure is suitable for prioritizing maintenance actions. As compared to Birnbaum's measure, the components' reliability is integrated into the measure. Using the TBM, the CR measure can be defined by:

$$\begin{aligned}[I^{CR}(i)] &= [I^B(i)]\frac{[Bel(\{F_i\}), Pl(\{F_i\})]}{[Bel(\{F_S\}), Pl(\{F_S\})]} \\ &= [I^B(i)]\frac{[\underline{Q}_i, \overline{Q}_i]}{[\underline{Q}_S, \overline{Q}_S]}\end{aligned}$$

Similarly to the way interval form using AA of Birnbaum measures was obtained, the interval forms of $I^{RAW}(i)$, $I^{RRW}(i)$, and $I^{CR}(i)$ are computed and represented in Table II.

B. Pignistic Definitions

In Table II, we give interval values of Birnbaum importance measures. However, these interval values are not sufficient to rank components. To do this, we have to convert these interval values to a probability measure. Such a transformation is called a probabilistic transformation. We define the probabilistic transformation as a mapping $f : m \to P$ where P denotes the probability distribution and m the BBA function [54]. A probabilistic transformation f is:

- *ulb*-consistent (upper and lower bound consistent): if $Bel(A) \leq f(A) \leq Pl(A)$ for any $A \subseteq X$.
- *p*-consistent (or probabilistically consistent): if $f(m) = m$ for any Bayesian BBA m.

- α-consistent: if $f(\alpha m_1 + (1-\alpha)m_2) = \alpha f(m_1) + (1-\alpha)f(m_2)$ for any BBAs m_1 and m_2.

The most known probabilistic transformation is the pignistic transformation $BetP$. It was introduced by Smets and Kennes [55] and corresponds to the generalized insufficient reason principle: a BBA assigned to the union of n atomic sets is split equally among these n sets. It is defined for any set $B \subseteq X$ and $B \neq \emptyset$ by the following:

$$BetP(B) = \sum_{A \neq \emptyset | A \subseteq X} \frac{|A \cap B|}{|A|} \frac{m(A)}{1 - m(\emptyset)} \tag{13}$$

Where $|A|$ denotes the cardinality of $A \subseteq X$. We should note that in the case of binary systems and closed world hypothesis (*i.e.* $m(\emptyset) = 0$), the pignistic system's reliability $BetR_S$ is given by: $BetR_S = m^{X_S}(\{W_S\}) + \frac{m^{X_S}(\{W_S, F_S\})}{2}$.

The formula of the normalized plausibility probabilistic transformation PlP and the normalized belief probabilistic transformation $BelP$ are given in Appendices.

Other probabilistic transformations were also defined using different kinds of mappings either proportional to the plausibility, to the normalized plausibility, to all plausibilities, to the belief or a hybrid mapping. For more details, see [56].

Then, based on the pignistic transformation, we propose to define our pignistic Birnbaum measure as follows:

$$I^B_{Bet}(i) = |Bet(R_S|\{W_i\}) - Bet(R_S|\{F_i\})| \tag{14}$$

where $Bet(R_S|\{W_i\})$ is the system's pignistic reliability when component i is functioning, and $Bet(R_S|\{F_i\})$ is the system's pignistic reliability when component i is in a failed state. In the case of coherent systems, we can write: $I^B_{Bet}(i) = Bet(R_S|\{W_i\}) - Bet(R_S|\{F_i\})$. We also note that the pignistic Birnbaum measure $I^B_{Bet}(i)$ is the midpoint of the interval $[I^B(i)] = [I^B_0(i) - h^B_i, I^B_0(i) + h^B_i]$. The other pignistic measures are given in Table II. Furthermore, this pignistic Birnbaum measure can be defined using some other distances instead of substraction operation. In [57], Tessem aimed to assess the quality of Bayesian approximation algorithms of belief functions by proposing an error measure between two pignistic values of BBAs m and m' based on the Minkowski family and defined as follows: $d(m, m') = max_{\theta_l \subseteq X} |BetP(\theta_l) - BetP'(\theta_l)|$. In our reliability model, the parameter θ_l belongs to $\{F_S, W_S, \{F_S, W_S\}\}$. $BetP$ is the system's pignistic reliability when component i is functioning, and $BetP'$ is the system's pignistic reliability when component i is in a failed state. When θ_l is equal to W_S the Tessem distance is equivalent to our proposed measure. We can also use the extension of the Euclidean measure between two BBAs from the probability theory to the D-S theory proposed by Cuzzolin [58] as follows: $d(m, m') = \sqrt{\sum_{A \subseteq X_S} (m(A) - m'(A))^2}$. Jousselme *et al.* [59] proposed a distance based on similarity function and defined by: $d(m, m') = \sqrt{\frac{d_{11}}{2} - d_{12} + \frac{d_{22}}{2}}$ where $d_{ij} = \sum_{A \subseteq X} \sum_{B \subseteq X} m_i(A) m_j(B) S(A, B)$

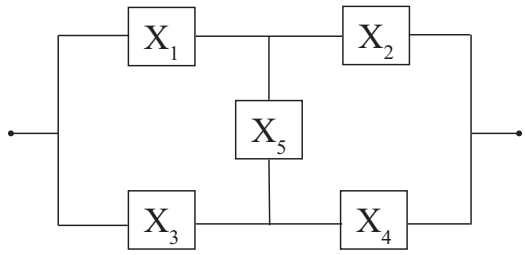

Fig. 2: Reliability block diagram of a bridge system

and $S(A,B)$ is the similarity function given by: $S(A,B) = \frac{|A \cap B|}{|A \cup B|}$. For more details about distances defined in D-S theory see [59], [60], [61], [58].

According to Dubois *et al.* [62], the pignistic transformation is mathematically equivalent to changing each piece of partial ignorance E_i into a uniform probability P_i on E_i representing a Bayesian uninformed prior, and $BetP$ is then the convex mixture of the P_i's with weights m_i. Hence the pignistic transformation approach to decision with belief functions is consistent with the higher-order probability approach, viewing the weights m_i as meta-probabilities. It is thus a generalized indifference Laplacean principle. Furtheremore, the pignistic transformation is the only probabilistic transformation in the belief framework which have the three properties of consistency [63], [54]. Moreover if we consider the set of probability distributions $\mathcal{P} = \{P | P \geq Pl\}$ where P is a probability distribution and Pl is the plausibility function induced by the BBA m_i, then it was proved [64], [65] that the pignistic probability coincides with the center of gravity of $\mathcal{P}$. That's why we advise users to use the pignistic transformation in the absence of total order of components importance measures or to get new information to have a direct total order on components ranking.

V. Numerical example

To examine the general applicability of the importance measures definitions, a system with a bridge configuration is studied (cf. Figure 2). The bridge system is composed of five components X_1, X_2, X_3, X_4 and X_5. Depending on the cases, the components have reliability data presented in Tables III, IV, V and VII. Four different cases are considered. The first case corresponds to the case when there is no epistemic uncertainty about reliability data of components. The second one corresponds to the presence of both aleatory and epistemic uncertainties. The third one consists of treating many experts' judgments. The last case corresponds to reliability data with variable epistemic uncertainty.

A. Case I: Reliability data with only aleatory uncertainty

We consider only aleatory uncertainties ($m^{X_i}(\{F_i, W_i\}) = 0$) for components X_1, X_2, X_3, X_4 and X_5 as shown in Table III. Importance measures are computed by using equations presented in Table II. The

TABLE III: Case I - BBAs of components

Components	$m^{X_i}(\{F_i\})$	$m^{X_i}(\{W_i\})$	$m^{X_i}(\{F_i, W_i\})$
X_1	0.21	0.79	0
X_2	0.26	0.74	0
X_3	0.22	0.78	0
X_4	0.31	0.69	0
X_5	0.28	0.72	0

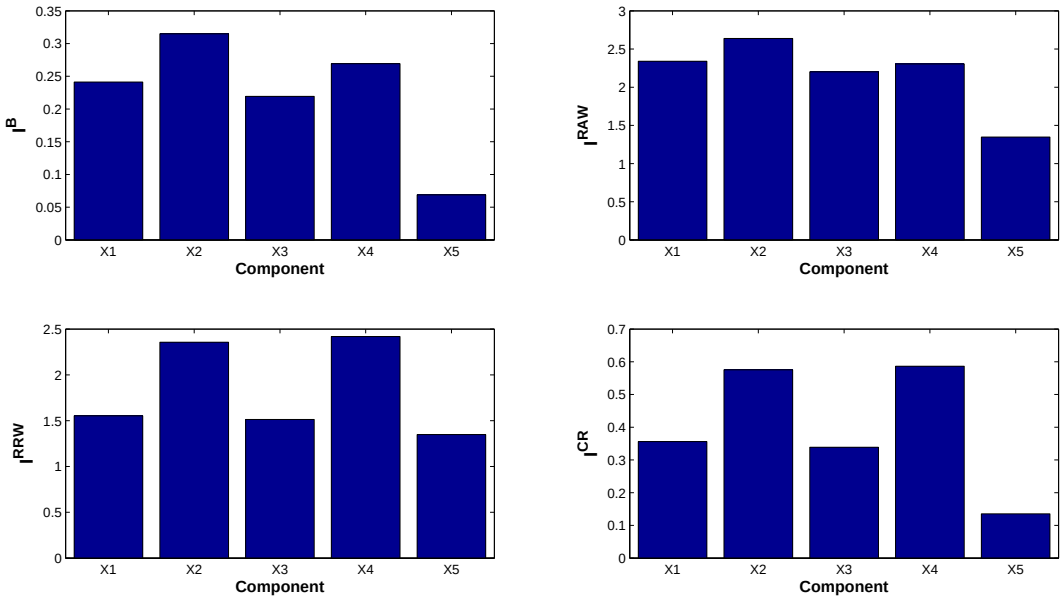

Fig. 3: Case I - Importance measures of components

obtained importance measures (cf. Figure 3) are precise values because there is no epistemic uncertainty related to components' reliability data and in this case the belief measures are equals to the plausibility measures. Additionally, we can see that RRW and CR measures give the same rankings for all components ($I^{RRW}(X_5) < I^{RRW}(X_3) < I^{RRW}(X_1) < I^{RRW}(X_2) < I^{RRW}(X_4)$ and $I^{CR}(X_5) < I^{CR}(X_3) < I^{CR}(X_1) < I^{CR}(X_2) < I^{CR}(X_4)$). Birnbaum and RAW measures give the same most important component X_2. Therefore, we can only consider the two measures RAW and RRW because their definitions are easier to understand. If we have the potential to upgrade components, RAW measure indicates that the component X_2 is the most important in the system. Whereas if no upgrades or improvements are possible, RRW measure indicates that the deterioration of component X_4 is the most critical in the system and thus inspections must be first done on X_4.

TABLE IV: Case II - BBAs of components

Components	$m^{X_i}(\{F_i\})$	$m^{X_i}(\{W_i\})$	$m^{X_i}(\{F_i, W_i\})$
X_1	0.18	0.72	0.10
X_2	0.23	0.71	0.06
X_3	0.22	0.68	0.10
X_4	0.20	0.66	0.14
X_5	0.27	0.62	0.11

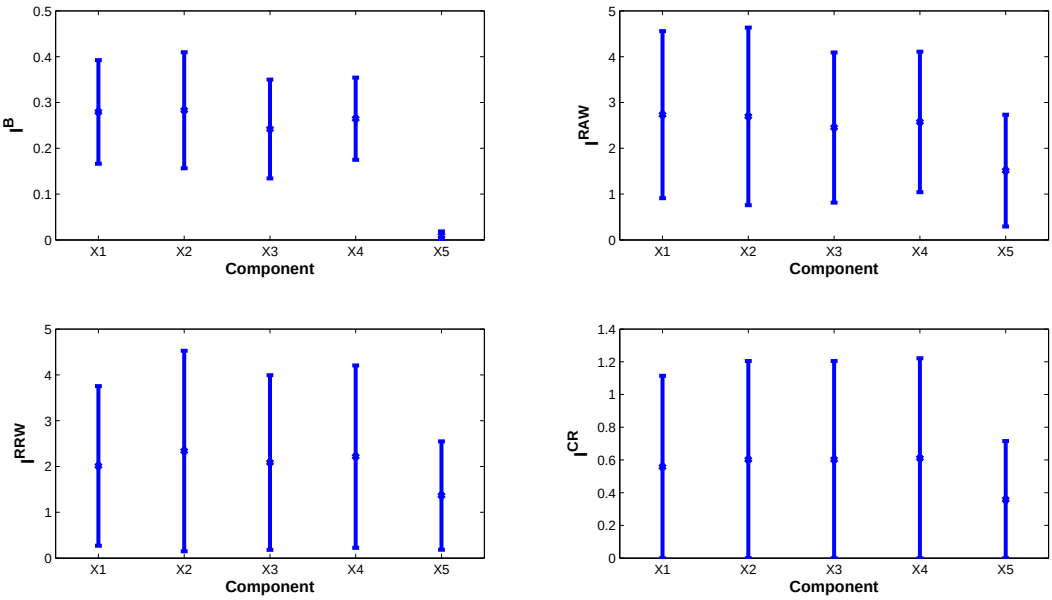

Fig. 4: Case II - Pignistic importance measures of components

B. Case II: Reliability data with both aleatory and epistemic uncertainties

Let us consider epistemic uncertainties ($m^{X_i}(\{F_i, W_i\}) > 0$) for components X_1, X_2, X_3, X_4 and X_5 as shown in Table IV. Using equations presented in Table II, we compute importance measures of system's components. The obtained importance measures (cf. Figure 4) are interval values because in the presence of epistemic uncertainties the belief measures are not equal to the plausibility measures. However, within these interval values of importance measures, it is very difficult to rank components' importance. This is why we compute the pignistic values of importance measures. As we can see in Figure 5, within the pignistic values, it is easy to rank components' importance. For example, according to RRW, we have: $I^{RRW}(X_5) < I^{RRW}(X_1) < I^{RRW}(X_3) < I^{RRW}(X_4) < I^{RRW}(X_2)$.

Another interesting idea is to compare the results obtained by the distances defined in subsection IV-B and our proposed distance in the computation of the Birnbaum importance measures. According to results presented in Figure 6, we obtain the same ranking of components in all distances ($I^B(X_5) < I^B(X_3) <$

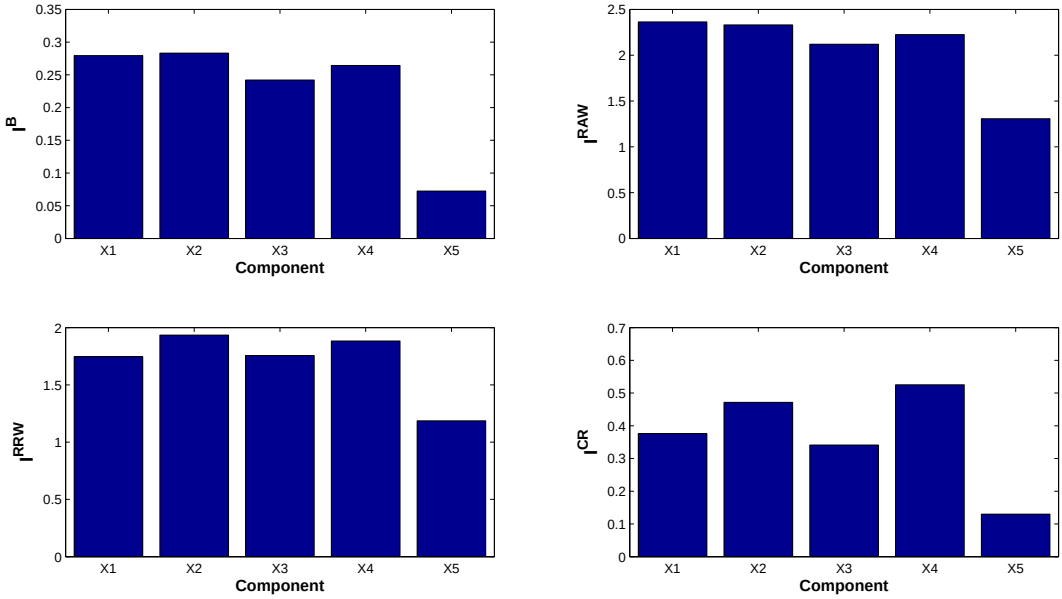

Fig. 5: Case II - Importance measures of components

$I^B(X_4) < I^B(X_1) < I^B(X_2)$). Particularly, the importance measures values obtained by our proposed distance are identical to those obtained by Tessem distance and are very close to those obtained by Jousselme distance. This example shows that, in this case study, the distance choice does not influence the components' rankings. Additionnaly, we propose also to compare the results obtained for probability transformations presented in Table XI. As we can see in Figure 7, the pignistic and the plausibility transformations give the same ranking: $I^B_{pignistic}(X_5) < I^B_{pignistic}(X_3) < I^B_{pignistic}(X_4) < I^B_{pignistic}(X_1) < I^B_{pignistic}(X_2)$ and $I^B_{plausibility}(X_5) < I^B_{plausibility}(X_3) < I^B_{plausibility}(X_4) < I^B_{plausibility}(X_1) < I^B_{plausibility}(X_2)$. The belief transformation give the same ranking except for components X_1 and X_2: $I^B_{belief}(X_5) < I^B_{belief}(X_3) < I^B_{belief}(X_4) < I^B_{belief}(X_2) < I^B_{belief}(X_1)$.

C. Case III: Reliability data based on several experts' judgments

Let us consider three experts' judgments about components X_1, X_2, X_3, X_4 and X_5 as shown in Table V. In order to aggregate the experts' judgments, we use three combination rules: Dempster rule, Cautious rule and Yager rule. Table VI shows the results of reliability data related to the use of each rule between BBAs. Note that the conflict factor k between BBAs is not high ($k = \sum_{A\cap B=\emptyset,\forall A,B\subseteq X} m_i^X(A)m_j^X(B) < 0.6$). Thus Dempster rule does not lead to obvious contradictions in combination results. The Dempster rule considers that the three experts are equally reliable and independent. The Cautious rule considers that the experts are not independent. Instead of normalizing out the conflict, as in the Dempster rule, the Yager rule is based on the attribution of the conflict to the frame of discernment X. Then, we use equations presented in Table II to compute and rank the components' importance. According to results presented in Figure 8, we obtain the same

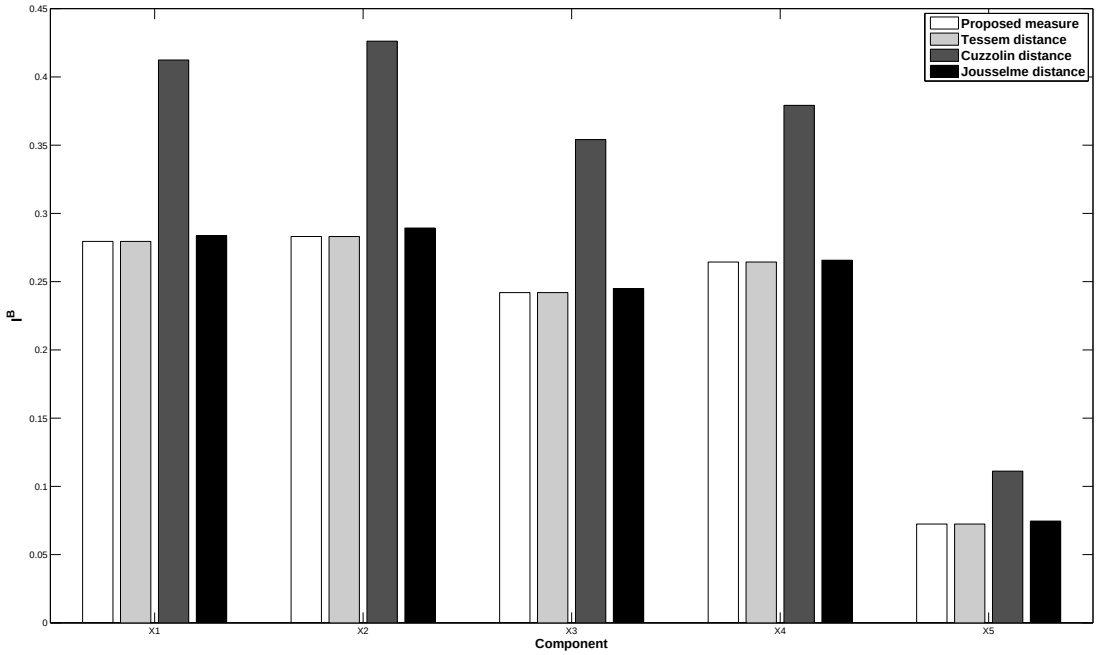

Fig. 6: Case II - Birnbaum pignistic measures based on several distances

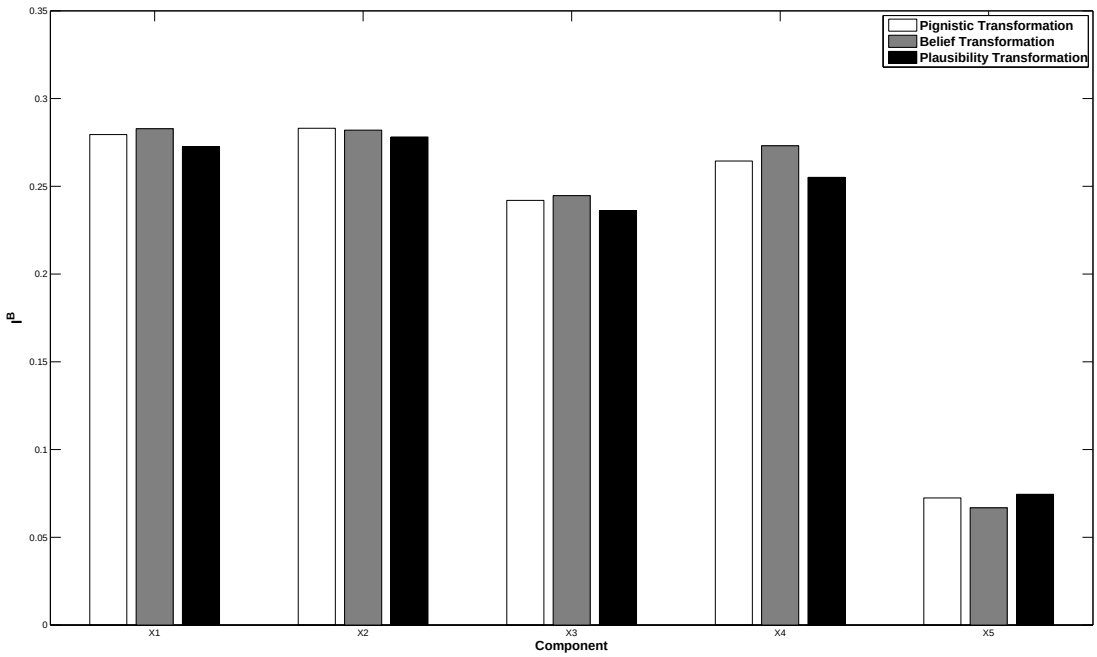

Fig. 7: Case II - Birnbaum measures based on several probability transformations

TABLE V: Case III - BBAs of components X_1, X_2, X_3, X_4 and X_5

	Expert I		Expert II		Expert III	
Components	$m^{X_i}(\{F_i\})$	$m^{X_i}(\{W_i\})$	$m^{X_i}(\{F_i\})$	$m^{X_i}(\{W_i\})$	$m^{X_i}(\{F_i\})$	$m^{X_i}(\{W_i\})$
X_1	0.10	0.80	0.15	0.82	0.15	0.75
X_2	0.20	0.75	0.20	0.77	0.22	0.68
X_3	0.18	0.79	0.10	0.85	0.30	0.60
X_4	0.20	0.70	0.22	0.68	0.25	0.65
X_5	0.16	0.75	0.16	0.77	0.18	0.72

TABLE VI: Case III - The obtained BBAs based on several combination rules

	Dempster rule		Cautious rule		Yager rule	
Components	$m^{X_i}(\{F_i\})$	$m^{X_i}(\{W_i\})$	$m^{X_i}(\{F_i\})$	$m^{X_i}(\{W_i\})$	$m^{X_i}(\{F_i\})$	$m^{X_i}(\{W_i\})$
X_1	0.0159	0.9841	0.0459	0.8214	0.0022	0.4920
X_2	0.0273	0.9727	0.1990	0.7690	0.0088	0.3927
X_3	0.0206	0.9794	0.1809	0.7915	0.0054	0.4029
X_4	0.0630	0.9370	0.2378	0.6667	0.0110	0.3094
X_5	0.0392	0.9608	0.1599	0.7704	0.0046	0.4158

ranking of components X_3 and X_5 in Dempster, Cautious and Yager rules (Rank($X_3 = 4$) and Rank($X_5 = 5$)). Whereas, the ranks of other components change depending on the combination rule. For example, according to RRW measure, the rank of component X_2 is 2 when using Dempster rule, and 1 when using Cautious or Yager rule. This why it is very important to choose the combination rule which has hypothesis (independence, conflict, etc.) corresponding to our case study. For example, if the experts are not independent we have to choose the Cautious rule. Whereas, if there is a high conflict between experts, we have to choose the Yager rule.

D. Case IV: Reliability data with variable epistemic uncertainty

We aim to study the influence of the epistemic uncertainty on the components' rankings. Therefore, we consider that there is no epistemic uncertainty with only one component in each case a, b, c, d and e (cf. Table VII). For example, the case c corresponds to $m^{X_3}(\{F_3, W_3\}) = 0$ (there is no epistemic uncertainty about reliability data of component X_3). For simplicity, we choose to evaluate only Birnbaum pignistic measures. The same analysis can be done for other importance measures. Figure 9 shows that components X_1, X_2, X_3 and X_4 change ranks depending on the cases. For example, component X_4 changes rank between case a (Rank(X_4)=3), b (Rank(X_4)=1) and d (Rank(X_4)=2). That means that an element which is the most important with respect to a value of epistemic uncertainty can be less important for a different value of epistemic uncertainty. This

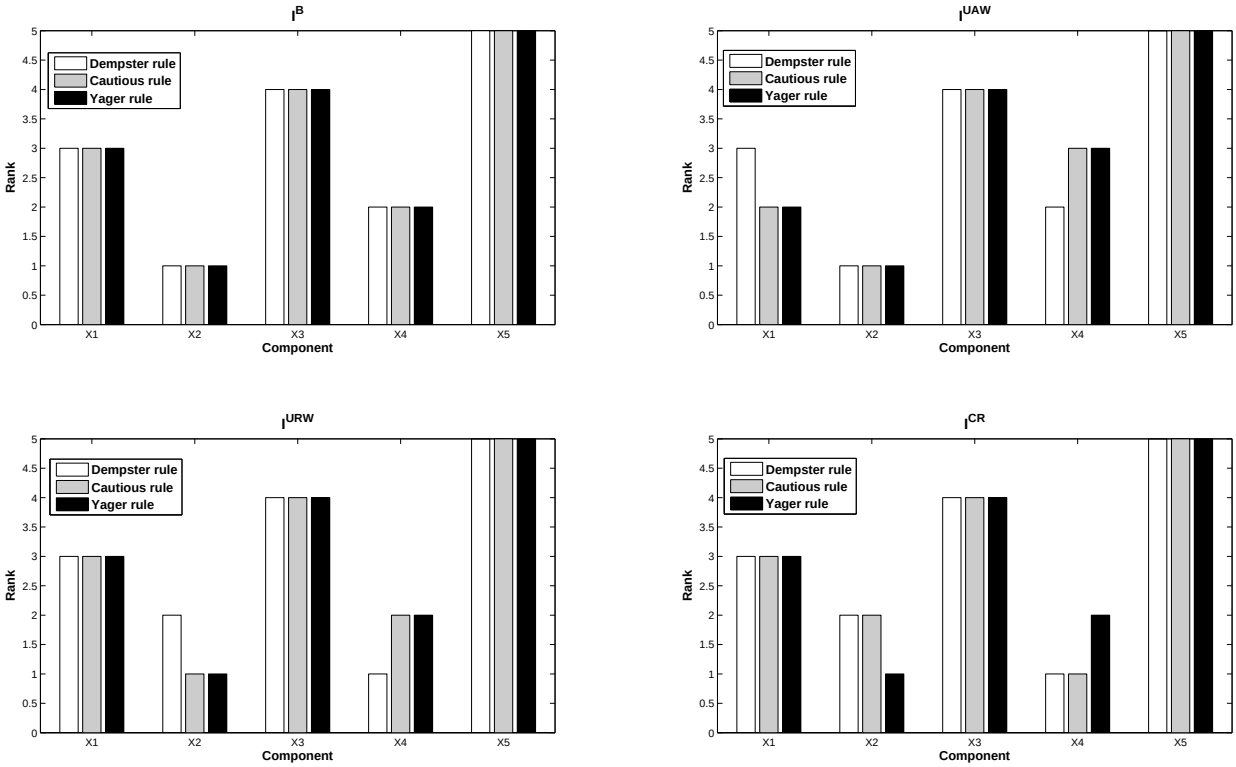

Fig. 8: Case III - Components' ranking

TABLE VII: Case IV - BBAs of components X_1, X_2, X_3, X_4 and X_5

	Case a		Case b		Case c		Case d		Case e	
Comp.	$m^{X_i}(\{F_i\})$	$m^{X_i}(\{W_i\})$	$m^{X_i}(\{F_i\})$	$m^{X_i}(\{W_i\})$	$m^{X_i}(\{F_i\})$	$m^{X_i}(\{W_i\})$	$m^{X_i}(\{F_i\})$	$m^{X_i}(\{W_i\})$	$m^{X_i}(\{F_i\})$	$m^{X_i}(\{W_i\})$
X_1	$\boxed{0.13}$	$\boxed{0.87}$	0.05	0.79	0.05	0.79	0.05	0.79	0.05	0.79
X_2	0.10	0.74	$\boxed{0.18}$	$\boxed{0.82}$	0.10	0.74	0.10	0.74	0.10	0.74
X_3	0.07	0.78	0.07	0.78	$\boxed{0.15}$	$\boxed{0.85}$	0.07	0.78	0.07	0.78
X_4	0.15	0.69	0.15	0.69	0.15	0.69	$\boxed{0.23}$	$\boxed{0.77}$	0.15	0.69
X_5	0.13	0.72	0.13	0.72	0.13	0.72	0.13	0.72	$\boxed{0.8}$	$\boxed{0.2}$

case clearly shows that, in some systems' configurations, the change of epistemic uncertainty's amount gives a greatest impact on the components' rankings.

VI. Case study : Fire-Detector System

Nowadays, fire detection systems are used worldwide in order to protect life and goods. The function of a fire detection system is to detect fire at the earliest practicable moment, and to give signals and indications so that appropriate action can be taken [66]. In order to increase the overall detectors' reliability, these systems must be tested periodically to detect dormant failures, *i.e.* to check that they will respond if there is an actual demand. European standard EN 54 specifies requirements, test methods and performance criteria against

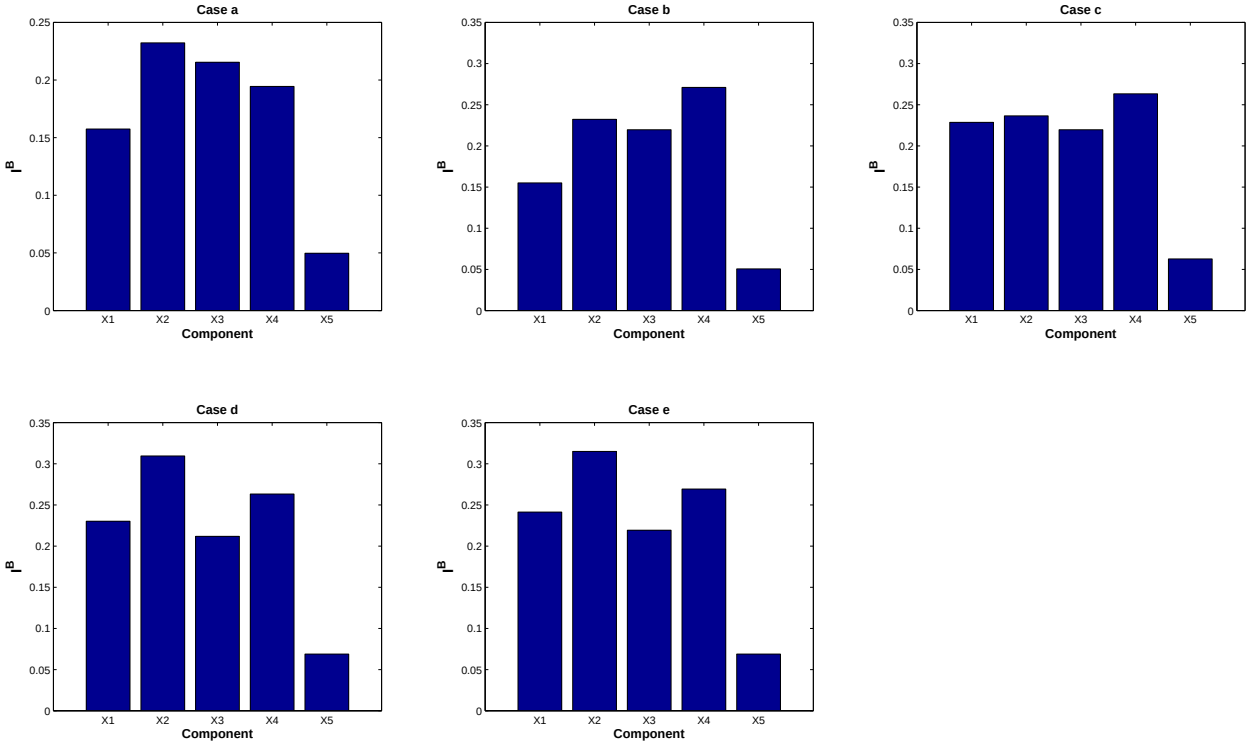

Fig. 9: Case IV - Birnbaum importance measure results

which the effectiveness and reliability of the component parts of fire detection can be assessed [66]. This is why industrials need methods to rank fire detector components for tests and maintenance. This can be carried out by identifying components which have the greatest impact on the overall system's reliability.

The system considered here is a fire detector located in a production room taken from Hoyland and Rausand [53]. It falls into two sections, heat and smoke detection sections with a manually alarm button. The configuration of the fire detector is represented in Figure 10. In the heat detection part, there is a one circuit with four identical fuse plugs FP1, FP2, FP3, and FP4. If the temperature is more than $72°C$, the fuse plugs force the air out of the circuit. This circuit is connected to a pressure switch (PS). The PS is in a working state if at least one of the fuse plugs is in a working state. Then, it transmits a signal to a start relay (SR) in order to activate an alarm and to cause a shutdown of the system. The smoke-detection part is composed of three smoke detectors SD1, SD2, and SD3. These smoke-detectors are connected to a voting unit (VU) with a two out of three voting configuration. The DC source must be in a working state for the successful transmission of a signal from heat-detector or smoke-detector. In the case of manual activation of this part, an operator OP must be always present. If the operator observes a fire, he has to turn on the manual-switch (MS) in order to relieve pressure in the circuit of the heat-detection part. This activates the PS, which in turn gives an electric

TABLE VIII: Components information for the fire-detector system

Components number	Abbreviation	Description	Interval bounds of β (epistemic uncertainty)	η
1	DC	Current source	[0.9, 1.85]	1
2	SR	Start relay	[1.4, 1.75]	1
3	PS	Power switch	[1.2, 1.8]	1
4	OP	Operator	[1.2, 1.8]	1
5	MS	Manual switch	[1.7, 1.9]	1
6	VU	Voting	[1.7, 1.9]	1
7-10	FP1-4	Melt plugs	[2, 2.4]	1
11-13	SD1-3	Smoke detectors	[1.1, 2.15]	1

signal to SR. The system has 13 independent Weibull components with survival functions (two-parameter Weibull distribution) given by:

$$S_i(t) = exp^{-(t/\beta_i)^{\eta_i}} \qquad (i = 1, ..., 13)$$

The values of β_i and η_i given by experts are shown in Table VIII. This case study was used by Chaudhuri *et al.* [67] to compute Birnbaum importance of components based on a new representation of the structure function in presence of precise values of β_i. In this study, we are in presence of both aleatory uncertainties (Weibull components with survival functions) and epistemic uncertainties (interval values of β_i). We aim:

1) To compare the components' rankings obtained in presence of epistemic uncertainty and those obtained when using precise values of β_i ($\beta_i = \frac{\beta_{imin}+\beta_{imax}}{2}$) (Comparison I).
2) To compare the components' rankings obtained obtained by D-S approach and those obtained by two-stages nested Monte-Carlo simulations approach (Comparison II).

A. Comparison I

The measures $I^B_{average}$, $I^{RAW}_{average}$, $I^{RRW}_{average}$, and $I^{CR}_{average}$ denote respectively the Birnbaum, RAW, RRW and CR importance measures obtained when using average values of β_i. The reliability block diagram of the system is given in Figure 11. There are 8 minimal path sets:
$\{\{1,4,5,3,2\},\{1,11,12,6,2\},\{1,11,13,6,2\},\{1,12,13,6,2\},\{1,7,3,2\},\{1,8,3,2\},\{1,9,3,2\},\{1,10,3,2\}\}$.
The BBAs of components at time t are obtained as follows:

$$m(\{W_i\}) = exp^{-(t/\beta_{imin})^{\eta}}; \quad m(\{F_i\}) = 1 - exp^{-(t/\beta_{imax})^{\eta}} \qquad (i = 1, ..., 13)$$

Using minimal paths method, we compute the BBA m_{Config} which represents the system's configuration and then we evaluate the reliability of system using our method given in section II-B. Finally, the importance measures are computed over the time using equations presented in Table II. Figure 12 reports the importance measures results at time $t = 1.6$. Looking at the importance measures obtained at time $t = 1.6$ one may

observe that, in RRW importance measure, DC is more important than FP when using precise values of β_i ($I^{RRW}_{average}(DC) > I^{RRW}_{average}(FP)$), contrarily to what would be happen if the components' ranking is based on the use of uncertainty values of β_i ($I^{RRW}_{Bet}(DC) < I^{RRW}_{Bet}(FP)$). Thus, reliability engineers can consider that the deterioration of component DC is more critical than FP and inspections will be done first on DC instead of FP. The same remarks hold for components VU and FP according to the Birnbaum measure and engineers can consider that the reliability of fire detector system is mostly perturbed by changes in the states of FP instead of VU. We can do the same analysis using CR measures. The drawback of the use of average values of β_i lies in the loss of epistemic uncertainty information whereas D-S theory takes into account this information. This case study clearly shows the importance of taking into account epistemic uncertainty in the evaluation of importance measures and the efficiency of D-S importance measures to address this problem.

B. Comparison II

We propose also to compare these results with importance measures obtained using probabilistic approach based on Monte-Carlo simulations. The probabilistic approach is based on a two-stage nested Monte Carlo simulation: sampling of values of the probability distribution representing the epistemic uncertainty about the parameter β (outer loop) and nested sampling of values of the aleatory variables representing the failure probabilities (inner loop) of components. These aleatory uncertainties were quantified by a Weibull distribution. The parameter β of these random laws has been considered as subject to epistemic uncertainty. Its state of knowledge was expressed by a uniform and normal probability distributions. In probability theory, when a probability distribution function for an uncertain variable is not available, the uniform distribution function is often used, justified by Laplace's Principle of Insufficient Reason [26]. This principle can be interpreted to mean that all simple events for which a probability distribution function is unknown have equal probabilities. The software MATLAB has been used for generating minimal cut sets and reliability estimation. The resulting number of model runs to be performed is $n * m$ with n and m being the sample sizes of the epistemic outer and the aleatory inner simulation loop respectively. The sampling of epistemic and aleatory uncertainties simultaneously with sample size n=10000 give the results presented in Table IX for 99 percentile.

From the results of the present analysis (cf. Table IX), it is seen that both approaches can obtain interval bounds of importance measures and provide decision-makers useful information about the importance of each components. The interval obtained from D-S theory is wider than that from the probabilistic approach. This is to be expected since the D-S approach only uses the information of the confidence bounds on the unknown parameter β, while in the probabilistic approach prior information (uniform and normal distributions) is assumed and incorporated in analysis. However, by assuming a probability distribution for epistemic uncertainty

TABLE IX: Case Study - Interval values of Birnbaum measure: Comparison with MC simulations

	MC simulations approach		D-S approach
	Normal distribution	Uniform distribution	
Components	99 percentile	99 percentile	
DC	[0,0.0048]	[0,0.0063]	[0,0.0098]
OP	[0,0.0007]	[0,0.0012]	[0,0.0022]
MS	[0,0.0007]	[0,0.0011]	[0,0.0021]
PS	[0.0001,0.0056]	[0,0.0078]	[0,0.0121]
SR	[0.0005,0.0083]	[0,0.0119]	[0,0.0196]
SD1-3	[0,0.00076]	[0,0.00115]	[0,0.0022]
VU	[0,0.0008]	[0,0.0012]	[0,0.0023]
FP1-4	[0,0.0017]	[0,0.0026]	[0,0.0039]

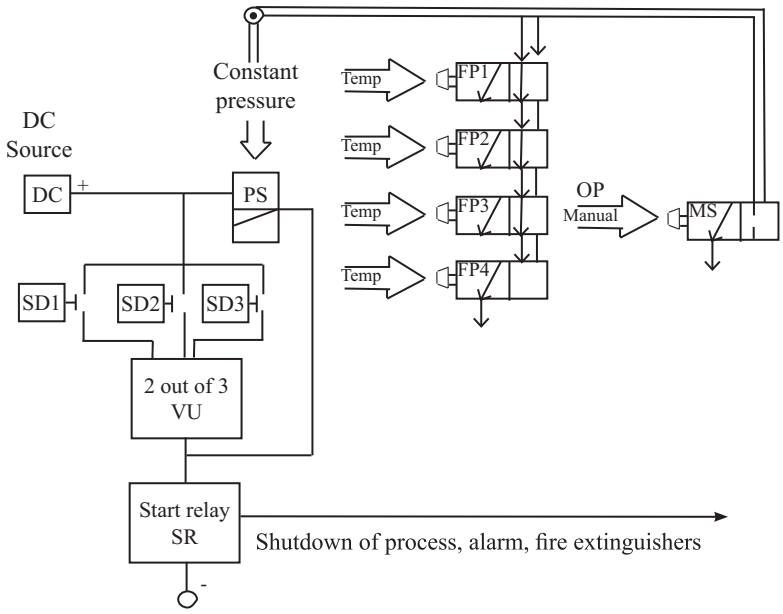

Fig. 10: The configuration of the fire-detector system [53].

we are introducing once more uncertainty in the probabilistic approach. The experts state their uncertainty assessment of the value of β in terms of a range of possible values, this does not justify the allocation of a specific distribution (uniform or normal).

On the other hand, in this case study, we offer two solutions to the reliability experts: The first solution is to obtain interval values of importance measures as represented in Table IX. In the case of $I_g^B = [a, b]$ and $I_h^B = [c, d]$ with $a > c$ and $b > d$, the component g is more important than component h. But in the case that $a > c$ and $b < d$ we can not take a decision, in this case we have to use pignistic values of importance measures. This is why we give pignistic importance measures of components in Table X.

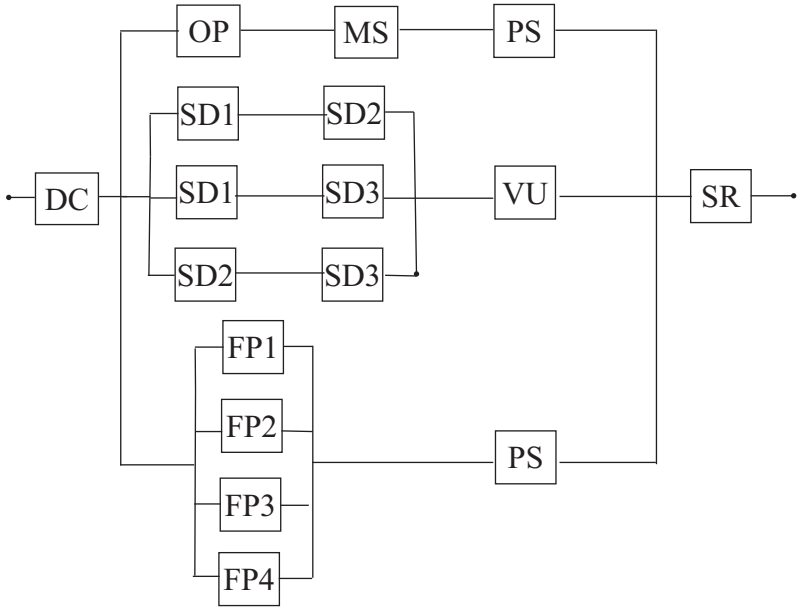

Fig. 11: Reliability block diagram of the fire-detector system.

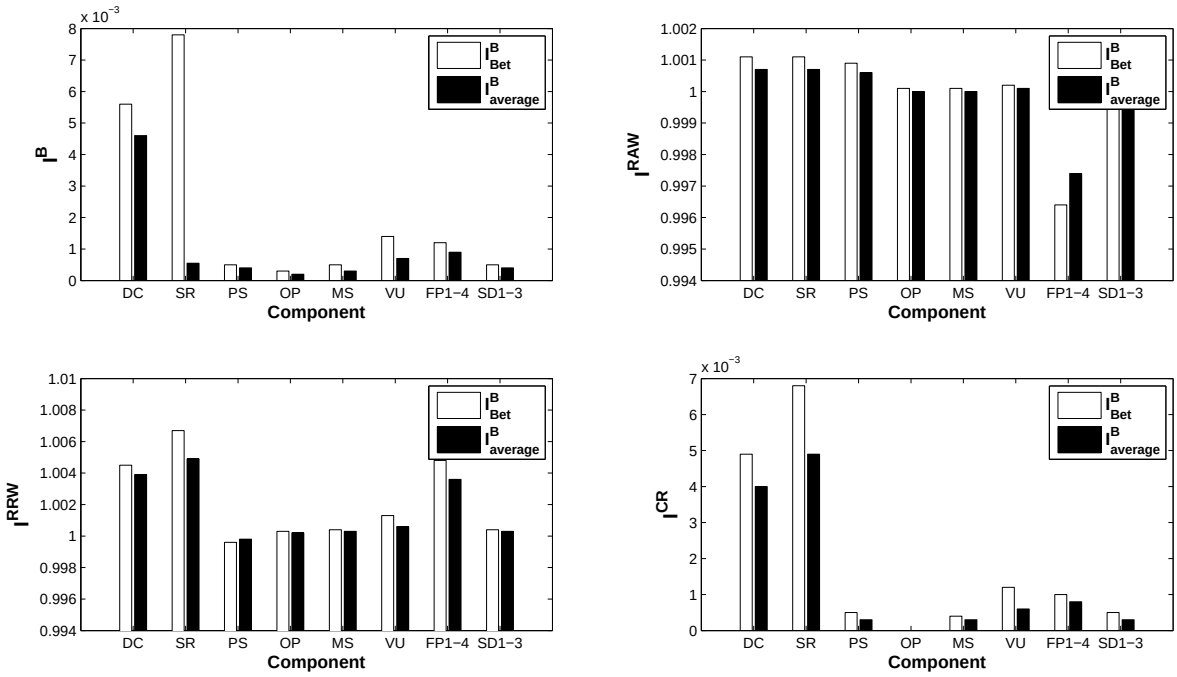

Fig. 12: Case study - Importance measures of components at $t = 1.6$

TABLE X: Case Study - Pignistic values of Birnbaum measure: Comparison with MC simulations

	MC simulations approach		D-S approach
	Normal distribution	Uniform distribution	
Components	99 percentile	99 percentile	
DC	0.0024	0.0032	0.0049
OP	0.0003	0.0006	0.0011
MS	0.0003	0.0006	0.0010
PS	0.0028	0.0038	0.0060
SR	0.0043	0.0058	0.0098
SD1-3	0.0003	0.0005	0.0011
VU	0.0004	0.0006	0.0011
FP1-4	0.0008	0.0013	0.0019

VII. Summary and conclusions

It is an important task to identify the components in a system, which have the greatest impact on system's reliability. In this paper, we introduced extended measures of component importance in presence of both aleatory and epistemic uncertainties. These measures were based on D-S reliability analysis approach and Affine Arithmetic. A classical system was studied and four cases representing different types of reliability data were analyzed. We finally proposed a comparison with hybrid probabilistic approaches. Future research will focus on extending the D-S approach to other importance measures that also account for interactions such as joint reliability [68], [69] and total order reliability importance measures [70], [71].

Appendix

A. Formula of marginalization

Consider a BBA $m^{\Omega_x\Omega_y}$ defined on the Cartesian product $\Omega_x\Omega_y$. The marginal BBA $m^{\Omega_x\Omega_y\downarrow\Omega_x}$ on Ω_x is defined by:

$$m^{\Omega_x\Omega_y\downarrow\Omega_x}(A) = \sum_{B\subseteq\Omega_x\Omega_y/Proj(B\downarrow\Omega_x)=A} m^{\Omega_x\Omega_y}(B) \tag{15}$$

$$\forall A \subseteq \Omega_x$$

Where $Proj(B \downarrow \Omega_x) = \{x \in \Omega_x / \exists y \in \Omega_y, (x, y) \in B\}$.

B. Formula of vacuous extension

Consider a BBA m^{Ω_x} defined on Ω_x. Its vacuous extension on $\Omega_x\Omega_y$ is defined by:

$$m^{\Omega_x\uparrow\Omega_x\Omega_y}(B) = \begin{cases} m^{\Omega_x}(A) & \text{if} \quad B = A \times \Omega_y \\ 0 & \text{otherwise.} \end{cases} \tag{16}$$

$$\forall\ A \subseteq \Omega_x$$

C. Formulas of combination rules

The Conjunctive $\textcircled{\cap}$ and Disjunctive $\textcircled{\cup}$ rules are defined by:

$$m^{\Omega}_{i\textcircled{\cap}j}(H) = \sum_{A\cap B=H,\forall A,B\subseteq\Omega} m^{\Omega}_i(A)m^{\Omega}_j(B), \forall H \subseteq \Omega \tag{17}$$

$$m^{\Omega}_{i\textcircled{\cup}j}(H) = \sum_{A\cup B=H,\forall A,B\subseteq\Omega} m^{\Omega}_i(A)m^{\Omega}_j(B), \forall H \subseteq \Omega \tag{18}$$

The Dempster's rule is given by:

$$m^{X}_{i\oplus j}(H) = \frac{\sum_{A\cap B=H,\forall A,B\subseteq X} m^X_i(A)m^X_j(B)}{1-\sum_{A\cap B=\emptyset,\forall A,B\subseteq X} m^X_i(A)m^X_j(B)} \tag{19}$$

D. AI operations

In AI, addition, subtraction, multiplication, and division of intervals are defined as:

$$\begin{aligned} x+y &= [\underline{x}+\underline{y}, \overline{x}+\overline{y}] \\ x-y &= [\underline{x}-\overline{y}, \overline{x}-\underline{y}] \\ x*y &= [min(\underline{x}\underline{y}, \underline{x}\overline{y}, \overline{x}\underline{y}, \overline{x}\overline{y}), max(\underline{x}\underline{y}, \underline{x}\overline{y}, \overline{x}\underline{y}, \overline{x}\overline{y})] \\ \frac{x}{y} &= [\underline{x}, \overline{x}] * [\frac{1}{\overline{y}}, \frac{1}{\underline{y}}] \quad if \quad 0 \notin [\underline{y}, \overline{y}] \end{aligned}$$

E. Normalized plausibility probabilistic transformation PlP

The formula of the normalized plausibility probabilistic transformation PlP is given by:

$$PlP(B) = \frac{Pl(B)}{\sum_{A\in X} Pl(A)} = \frac{\sum_{C|C\cap B\neq\emptyset} m(C)}{\sum_{A\in X}\sum_{C|C\cap A\neq\emptyset} m(C)}$$

F. Normalized belief probabilistic transformation BelP

The formula of the normalized belief probabilistic transformation PlP is given by:

$$BelP(B) = \frac{m(B)}{\sum_{A\in X} Bel(A)} = \frac{m(B)}{\sum_{A\in X}\sum_{C\neq\emptyset|C\subseteq A} m(C)} \tag{20}$$

TABLE XI: Consistencies of some probabilistic transformations

	α-consistency	p-consistency	ulb-consistency
$BetP$	Yes	Yes	Yes
$BelP$	No	Yes	No
PlP	No	Yes	No

G. Consistencies of some probabilistic transformations

The consistencies of some probabilistic transformations is given in Table XI.

H. Discounting approach

Let suppose that we have to discount a BBA m^Ω by some factor $\delta \in [0,1]$. When the BBA is discounted, the remaining assignment is applied to the combination of all options in the frame of discernment Ω. The number $1-\delta$ is the degree of reliability attributable to the expert (Shafer [35] calls this a degree of trust), which leads to a BBA m^Ω_δ defined as:

$$m^\Omega_\delta(A) = (1-\delta).m^\Omega(A) \qquad \forall\, A \subseteq \Omega, A \neq \Omega \tag{21}$$

$$m^\Omega_\delta(\Omega) = \delta + (1-\delta).m^\Omega(\Omega)$$

A discount rate $\delta = 1$ means that the expert can certainly not be trusted: the resulting BBA is then vacuous. On the contrary, a null discount rate leaves m^Ω unchanged: this corresponds to the situation where the expert is known to be fully reliable. The discounting operation of a BBA m^Ω is also equivalent to the disjunctive combination of m^Ω with the BBA m^Ω_0 defined by:

$$m^\Omega_0(A) = \begin{cases} 1-\delta & \text{if} \quad A = \emptyset \\ \delta & \text{if} \quad A = \Omega \\ 0 & \text{otherwise} \end{cases} \tag{22}$$

References

[1] Z. W. Birnbaum, "On the importance of different components in a multicomponent system," in *Multivariate Analysis II.* P. R. Krishnaiah, Ed, N.Y:Academic, 1969.

[2] H. E. Lambert, "Measures of importance of events and cut sets in fault trees," *Reliability and Fault Tree Analysis*, pp. 77–100, 1975.

[3] D. Vasseur and M. Llory, "International survey on PSA figures of merit," *Reliability Engineering & System Safety*, vol. 66, pp. 261–274, 1999.

[4] J. D. Andrews and S. Beeson, "Birnbaum's measure of component importance for non-coherent systems," *IEEE Transactions on Reliability*, vol. 52, pp. 213–219., 2003.

[5] E. Borgonovo, "Epistemic uncertainty in the ranking and categorization of probabilistic safety assessment model elements: Issues and findings," *Risk Analysis*, vol. 28, pp. 983–1001, 2008.

[6] M. Modarres and M. Agarwal, "Considerations of probabilistic uncertainty in risk-based importance ranking," in *Proceedings of PSA '96, Park City, Utah*, 1996.

[7] E. Borgonovo, "Measuring uncertainty importance: investigation and comparison of alternative approaches." *Risk analysis*, vol. 5, pp. 1349–1361, 2006.

[8] E. Borgonovo and C. Smith, "Uncertainty in importance measures: Developing the epistemic risk achievement worth," in *Proc. of ESREL 2011 Ű European Safety and Reliability Conference*, 2011.

[9] H. Furuta and N. Shiraishi, "Fuzzy importance in fault tree analysis." *Fuzzy Sets and Systems*, vol. 12, pp. 205–213, 1984.

[10] G. J. Liang and J.-M. M. Wang, "Fuzzy fault tree analysis using failure possibility," *Microelectronics Reliability*, vol. 33, pp. 583–597, 1993.

[11] A. C. F. Guimarees and N. F. F. Ebecken, "Fuzzy FTA: a fuzzy fault tree system for uncertainty analysis," *Annals of Nuclear Energy*, vol. 26, pp. 523–532, 1999.

[12] M. Sallak, C. Simon, and J.-F. Aubry, "A fuzzy probabilistic approach for determining safety integrity level." *IEEE Transactions on Fuzzy Systems*, vol. 16, pp. 239–248, 2008.

[13] F. C. Meng, "Comparing two reliability upper bounds for multistate systems," *Rel*, vol. 87, pp. 31–36, 2005.

[14] ——, "Some further results on ranking the importance of system components," *Reliability Engineering & System Safety*, vol. 47, pp. 97–101, 1995.

[15] R. Winkler, "Uncertainty in probabilistic risk assessment," *Reliability Engineering & System Safety*, vol. 34, pp. 127–132, 1996.

[16] T. Aven and T. Nokland, "On the use of uncertainty importance measures in reliability and risk analysis," *Reliability Engineering & System Safety*, vol. 95, pp. 127–133, 2010.

[17] W. L. Oberkampf, J. C. Helton, C. A. Joslyn, S. F. Wojtkiewicz, and S. Ferson, "Challenge problems: uncertainty in system response given uncertain parameters," *Reliability Engineering & System Safety*, vol. 85, pp. 11–19, 2004.

[18] M. Drouin, G. Parry, J. Lehner, G. Martinez-Guridi, J. LaChance, and T. Wheeler, *Guidance on the Treatment of Uncertainties Associated with PRAs in Risk-informed Decision making.* Report, NUREG1855-V.1, 2009.

[19] T. Aven, "Interpretations of alternative uncertainty representations in a reliability and risk analysis context," *Reliability Engineering & System Safety*, vol. 96, pp. 353–360, 2011.

[20] P. S. Laplace, *A Philosophical Essay on Probabilities.* New York: Dover Publications Inc., 1814, English edition 1951.

[21] J. Venn, *The Logic of Chance*, 1866.

[22] B. D. Finetti, *Theory of Probability.* New York: Wiley & Sons., 1974.

[23] S. Kaplan and B. Garrick, "On the quantitative definition of risk," *Risk Analysis*, vol. 1, pp. 11–27, 1981.

[24] P. Cornell, "Uncertainties in risk analysis: six levels of treatment." *Reliability Engineering & System Safety*, vol. 54, pp. 95–111, 1996.

[25] G. Apostolakis, "The concept of probability in safety assessments of technological systems." *Science*, vol. 250, pp. 1359–1364, 1990.

[26] P. Walley, *Statistical reasoning with imprecise probabilities.* New York : Chapman and Hall, 1991.

[27] W. F. Caselton and W. Luo, "Decision making with imprecise probabilities: Dempster-shafer theory and applications," *Water Resources Research*, vol. 28, pp. 3071–3083, 1992.

[28] J. Helton, J. Johnson, W. Oberkampf, and C. Storlie, "A sampling-based computational strategy for the representation of epistemic uncertainty in model predictions with evidence theory," *Computer Methods in Applied Mechanics and Engineering*, vol. 196, pp. 37–40, 2007.

[29] P. Smets, "Belief functions: The disjunctive rule of combination and the generalized bayesian theorem," *International Journal of Approximate Reasoning*, vol. 9, no. 1, pp. 1–35, Aug. 1993.

[30] M. Guth, "A probabilistic foundation for vagueness and imprecision in fault tree analysis," *IEEE Transactions on Reliability*, vol. 40, pp. 563–571, 1991.

[31] T. Inagaki, "Independence between safety-control policy and multiple-sensors schemes via Dempster- Shafer theory," *IEEE Transactions on Reliability*, vol. 40, pp. 182–188, 1991.

[32] C. Simon and P. Weber, "Evidential networks for reliability analysis and performance evaluation of systems with imprecise knowledge," *IEEE Transactions on Reliability*, vol. 58, pp. 69–87, 2009.

[33] M. Sallak, W. Schön, and F. Aguirre, "The Transferable Belief Model for reliability analysis of systems with data uncertainties and failure dependencies," *Proceedings of the Institution of Mechanical Engineers, Part O: Journal of Risk and Reliability*, vol. 40, pp. 266–278, 2010.

[34] A. P. Dempster, "Upper and lower probabilities induced by a multivalued mapping," *Annals of Mathematical Statistics*, vol. 38, pp. 325–339, 1967.

[35] G. Shafer, *A Mathematical Theory of Evidence.* Princeton University Press, 1976.

[36] A. Dempster and A. Kong, "Uncertain evidence and artificial analysis," *Journal of Statistical Planing and Inference*, vol. 20, pp. 355–368, 1988.

[37] R. R. Yager, "On the Dempster-Shafer framework and new combination rules," *Information Sciences*, vol. 41, pp. 93–137, 1987.

[38] D. Dubois and H. Prade, "The principle of minimum specificity as a basis for evidential reasoning," *Uncertainty in knowledge-based systems*, pp. 75–84, 1987.

[39] T. Denœux, "Conjunctive and disjunctive combination of belief functions induced by nondistinct bodies of evidence," *Artificial Intelligence*, vol. 172, pp. 234–264, 2008.

[40] P. Smets, "The combination of evidence in the Transferable Belief Model," *IEEE Transactions on Pattern Analysis and Machine Intelligence*, vol. 12, pp. 447–458, 1990.

[41] R. G. Almond, *Graphical belief modeling.* Chapmand and Hall, 1995.

[42] O. Fumika, "A literature review on the use of expert opinion in probabilistic risk analysis," World Bank Policy Research Working, Tech. Rep., 2004.

[43] I. Kozine and Y. Filimonov, "Imprecise reliabilities: experiences and advances," *Reliability Engineering and System Safety*, vol. 67, pp. 75–83, 2000.

[44] A. P. Dempster, "New methods for reasoning towards posterior distributions based on sample data," *Annals of Mathematical Statistics*, vol. 37, pp. 355–364, 1966.

[45] G. Shafer, P. P. Shenoy, and K. Mellouli, "Propagating belief functions in qualitative markov trees," *International Journal of Approximate Reasoning*, vol. 1, pp. 349–400, 1987.

[46] P. Smets, "The application of the matrix calculus to belief functions," *International Journal of Approximate Reasoning*, vol. 31, pp. 1–30, 2002.

[47] R. E. Moore, *Interval Analysis.* Prentice-Hall, Englewood Cliffs, 1966.

[48] V. Kreinovich, V. Nesterov, and N. Zheludeva, "Interval methods that are guaranteed to underestimate (and the resulting new justification of kaucher arithmetic)," *Reliable Computing*, vol. 2, pp. 119–124, 1996.

[49] J. Comba and J. Stolfi., "Affine arithmetic and its applications to computer graphics." in *Proceedings of SIBGRAPIŠ93 - VI Simposio Brasileiro de Computacao Grafica e Processamento de Imagens, 9-18*, 1993.

[50] L. H. de Figueiredo and J. Stolfi, "Affine arithmetic: concepts and applications," *Numerical Algorithms*, vol. 37, pp. 147–158, 2004.

[51] D. Lee, A. Gaffar, R. Cheung, O. Mencer, W. Luk, and G. Constantinides, "Accuracy-guaranteed bit-width optimization," *IEEE Transactions on ComputerAided Design of Integrated Circuits and Systems*, vol. 25, pp. 1990–2000, 2006.

[52] A. Gandini, "Importance and sensitivity analysis in assessing system reliability," *IEEE Transactions on Reliability*, vol. 39, pp. 61–70, 1990.

[53] A. Hoyland and M. Rausand, *System Reliability Theory, Models and Statistical Methods.* Wiley, 1994.

[54] M. Daniel, "Probabilistic transformations of belief functions," *Lecture Notes in Computer Science*, vol. 3571, pp. 539–551, 2005.

[55] P. Smets and R. Kennes, "The Transferable Belief Model," *Artificial Intelligence*, vol. 66, pp. 191–243, 1994.

[56] J. Sudano, "Yet another paradigm illustrating evidence fusion (yapief)," in *Proc. of Fusion, Florence, Italy*, 2006.

[57] B. Tessem, "Approximations for efficient computation in the theory of evidence," *Artificial Intelligence*, vol. 61, pp. 315–329, 1993.

[58] F. Cuzzolin, "A geometric approach to the theory of evidence," *IEEE Transactions on Systems, Man, and Cybernetics - part C*, vol. 38, pp. 522–534, 2008.

[59] A.-L. Jousselme, D. Grenier, and E. Bosse, "A new distance between two bodies of evidence," *Information Fusion*, vol. 2, pp. 91–101, 2001.

[60] B. Ristic and P. Smets, "The TBM global distance measure for the association of uncertain combat id declarations." *Information fusion*, vol. 7, pp. 276–284, 2006.

[61] ——, "Global cost of assignment in the TBM framework for association of uncertain id reports," *Aerospace science and technology*, vol. 11, pp. 303–309, 2007.

[62] P. S. D. Dubois, H. Prade, "Representing partial ignorance," *IEEE System Machine and Cybernetic*, vol. 26, pp. 361–377, 1996.

[63] P. Smets, "Constructing the pignistic probability function in a context of uncertainty," in *Uncertainty in Artificial Intelligence 5 Annual Conference on Uncertainty in Artificial Intelligence (UAI-89).* Amsterdam, NL: Elsevier Science, 1989, pp. 29–39.

[64] J. H. R. Kruse, E. Schwecke, *Uncertainty and Vagueness in Knowledge Based Systems Ů Numerical Methods.* Springer Verlag, Berlin, 1991.

[65] D. Dubois and H. Prade, "Conditional objects as nonmonotonic consequence relationships," *IEEE Trans. Syst. Man Cybern*, vol. 24, pp. 1724–1740, 1993.

[66] *EN54: Components of Automatic Fire Detection Systems.* European Committee for Standardization, 1987.

[67] G. Chaudhuri, K. Hu, and N. Afshar, "A new approach to system reliability," *IEEE Transactions on Reliability*, vol. 50, pp. 75–84, 2001.

[68] M. Armstrong, "Joint reliability importance of elements," *IEEE Transactions on Reliability*, vol. 44, no. 3, pp. 408–412, 2010.

[69] J. J. L. Lu, "Fault trees, classification trees - joint failure importance for non coherent fault trees," *IEEE transactions on reliability*, vol. 56, pp. 435–443, 2007.

[70] E. Borgonovo, "The reliability importance of components and prime implicants in coherent and non-coherent systems including total-order interactions," *European Journal of Operational Research*, vol. 204, no. 3, pp. 485–495, 2010.

[71] E. Zio and L. Podofillini, "Accounting for components interactions in the differential importance measure," *Rel. Eng. & Sys. Safety*, vol. 91, no. 10-11, pp. 1163–1174, 2006.

Mohamed Sallak is an Associate Professor with the Computer Engineering Department in Compiegne University of Technology in France. He received a Ph.D. degree from Polytechnic Institute of Lorraine in 2007. His current research interests concern reliability studies under epistemic and aleatory uncertainties and particularly Dempster-Shafer and Imprecise probabilities theories.

Walter Schön got a degree in 1985 from Ecole Normale Supérieure in Paris, and received a doctorate in solid state physics from Université Pierre et Marie Curie (Paris) in 1989. He is currently a Professor with the Department of Information Processing Engineering at the Université de Technologie de Compiègne, France. His current research interests concern reliability engineering and safety critical computer systems.

Felipe Aguirre received a M.S degree in 2007 from ENIM in Metz in France. He is currently a Ph.D. student in Compiegne University of Technology and his research interests concern the use of Transferable Belief Model for reliability analysis of systems with data uncertainties.