HAL
open science

ew Series of Corers for Taking Undisturbed Vertical Samples of Soft Bottom Sediments

Jirong Xu, You-Shao Wang, Jinping Yin, Jinping Lin

To cite this version:

Jirong Xu, You-Shao Wang, Jinping Yin, Jinping Lin. ew Series of Corers for Taking Undisturbed Vertical Samples of Soft Bottom Sediments. Marine Environmental Research, 2011, 71 (4), pp.312. 10.1016/j.marenvres.2011.02.006 . hal-00682417

HAL Id: hal-00682417

https://hal.science/hal-00682417v1

Submitted on 26 Mar 2012

HAL is a multi-disciplinary open access archive for the deposit and dissemination of scientific research documents, whether they are published or not. The documents may come from teaching and research institutions in France or abroad, or from public or private research centers.

L'archive ouverte pluridisciplinaire **HAL**, est destinée au dépôt et à la diffusion de documents scientifiques de niveau recherche, publiés ou non, émanant des établissements d'enseignement et de recherche français ou étrangers, des laboratoires publics ou privés.

Accepted Manuscript

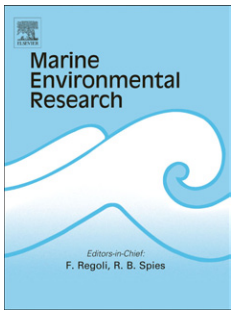

Title: ew Series of Corers for Taking Undisturbed Vertical Samples of Soft Bottom Sediments

Authors: Jirong Xu, You-Shao Wang, Jinping Yin, Jinping Lin

PII: S0141-1136(11)00033-X

DOI: 10.1016/j.marenvres.2011.02.006

Reference: MERE 3512

To appear in: *Marine Environmental Research*

Received Date: 7 January 2008

Revised Date: 18 February 2011

Accepted Date: 21 February 2011

Please cite this article as: Xu, J., Wang, Y.-S., Yin, J., Lin, J. ew Series of Corers for Taking Undisturbed Vertical Samples of Soft Bottom Sediments, Marine Environmental Research (2011), doi: 10.1016/j.marenvres.2011.02.006

This is a PDF file of an unedited manuscript that has been accepted for publication. As a service to our customers we are providing this early version of the manuscript. The manuscript will undergo copyediting, typesetting, and review of the resulting proof before it is published in its final form. Please note that during the production process errors may be discovered which could affect the content, and all legal disclaimers that apply to the journal pertain.

ACCEPTED MANUSCRIPT

New Series of Corers for Taking Undisturbed Vertical Samples of Soft Bottom Sediments

Jirong Xu[1.2]*, You-Shao Wang[1], Jinping Yin[1], Jinping Lin[3]

1. Faculty of Architectural Engineering and Environment, Ningbo University, Ningbo 315211, P.R. China

2. South China Sea Institute of Oceanology, Chinese Academy of Sciences, Guangzhou 510301, P.R. China

3. School of Social and Environmental Enquiry, The University of Melbourne, Victoria 3010, Australia

Abstract

A new series of sediment corers-a Single Tube Gravity Corer and a Multiple Tube Gravity Corer-has been developed for taking undisturbed vertical soft sediment samples, and a Hydraulic Pressure Multiple Tube Corer has been preliminarily designed. The Single Tube Gravity Corer can be operated by hand easily without using a winch, and it might be the simplest and the cheapest core sampler available. The Multiple Tube Gravity Corer was developed based on the Single Corer, which normally consists of three coring tubes, however, it is possible to install up to six tubes. The Hydraulic Pressure Multiple Tube Corer has been designed based on the Multiple Corer, which would take undisturbed sediment samples , and would be controlled by a computer and monitored by an underwater video camera. The pore water collection and the sediment Eh measurement-subsampling process through the transparent plastic tube wall is straightforward. Compared to other types of coring devices, such as the famous KC Kajak sediment core sampler made in Denmark; these corers have greater reliability, being simple in structure, relatively light weight, easy and efficient to operate, highly adaptable, and relatively inexpensive to produce.

Keywords: New Corers; Undisturbed Sediment Cores; Application

ACCEPTED MANUSCRIPT

1 . Introduction

Obtaining representative, undisturbed, vertical samples of soft bottom sediments is a fundamental prerequisite for much research in aquatic biology, ecology, geochemistry and environmental sciences conducted in fluvial, lacustrine, estuarine and marine situations. Unfortunately, the surface sediment may be disturbed during the sampling process; further, most soft sediment samplers (e.g. trawls, sledges, dredges, suction samplers, snap grabs, scoop, bucket, impact or hydrostatic corers) provide only semi-quantitative samples (Ankar 1977, Riddle 1989). Today greater demand for undisturbed benthic samplers is obvious in countless studies. Marine scientists cannot investigate benthic flux of materials, transfer of energy, nutrient and metal dynamics without proper attention to sediment sampling. Similarly, tracing aquatic pollutants, determining the vertical profiles of organisms and monitoring meio- and micro- fauna population density depends upon careful recovery of the upper sedimentary profile in an undisturbed manner.

Since the beginning of the 20th century, many different types of samplers for taking soft bottom sediments have been developed (Peterson and Jensen 1911, Ekman 1915). Soft sediment samplers fall into three main categories-grab samplers, box samplers and corers. Grab samplers of various designs are used to obtain surface samples. They perform well in soft, sandy or silty sediments, but are less effective when the substrate is gravely or rocky. Grab samplers disturb samples during digging and closing, so they are unable to recover sediment in an undisturbed way. Box samplers, in their original or modified versions, are the standard equipment for benthic research. They collect undisturbed samples, but, due to their size and weight constraints, whose use is limited to relative large-scale operations. Actually, box samplers also disturb sediment samples to same extent, because its mechanical closing structure is similar with grab samplers. Corers are generally simpler, easier to handle and more economical than other types of soft sediment samplers. Corers are often used to take undisturbed samples for microbial, biological and geochemical investigation incorporating the collection of the sediment-water interface.

Other corer-type sediment samplers have a number of deficiencies relative to the sampler described in this paper. The device described in Barnes (1960) has a diameter of only 1.0 cm, giving it a high wall friction co-efficient, outside the range for which entry characteristics can be calculated. The device described in Zullig (1953) has an internal diameter of 3.2 cm and a wall thickness of 0.4 cm and surprisingly, did not have a sharpened or bevelled edge, meaning it would displace or distort a high proportion of the core in a manner that could not easily be predicted or accounted for. With these deficiencies, it is not surprising that Elmgren (1973) found that the box-corer was superior to those with which it was compared. However, our wall thickness (polycarbonate) is 0. 15 cm (1.5 mm), which is efficiently to overcome the problem. Samples were taken in stiff mud at 47 m depth with a grab-type box sampler, a van Veen grab sampler and three gravity core samplers. Results were compared to ‘control’ cores obtained by SCUBA (self-contained underwater breathing apparatus) divers. The grab-type box sampler was shown to be suitable for collecting undisturbed samples for meiofaunal research, whereas the van Veen grab and three core samplers were not. The validity of studies employing the latter samplers is therefore open to a question.

Elmgren (1973) stressed the importance of sampling methods in all quantitative work on sublittoral meiofauna populations. Blomqvist (1985) examined the reliability of samples obtained using four lightweight, soft sediment sampling devices:Axelsson-Håkanson gravity corer, Kajak gravity corer, Jenkin bottom sampler and Ekman grab

(box corer). Each of these samplers was intended for use in soft sediments *in situ* by direct observation, measurement and photographic documentation by SCUBA divers. The results showed the relationship between compaction and sediment depth was dependent on core-tube diameter. These findings highlight the importance of sampler design in preserving stratigraphic integrity. Core description, penetration/compaction will depend largely on the sediment encountered and is not easily predicted in the case of layered sediments of different densities and water contents.

Blomqvist (1991) reviewed the development of samplers from the 1910s to the end of the 1980s, and suggested guidelines for the further design and development of samplers. He also predicted that the future samplers would be based around box and tube-coring samplers, because these would better suit the demand of providing representative quantitative (e.g. undisturbed) samplers.

Black *et al.* (2002) stated: "Blomqvist (1991) gives an analysis of techniques for sampling soft bottoms and concludes that the instruments best suited for quantitative sampling of soft bottom sediments appear to be those based on the coring principle." After summarizing limitations and biasing factors to be considered, Blomqvist (1991) indicated that a perfect core should: (1) permit unimpeded water flow through the coring tubes to obviate formation of a bow wave, (2) work on a supporting stand, permitting it to settle down, before the coring tubes enter, (3) avoid disturbing sample during closing operation and withdrawal from the sediment, (4) avoid shorting the sample during the coring tubes entering sediment, and (5) be of adequate and suitable size in relation to the vessels' size and facilities such as winches and frames.

A multiple corer for taking virtually undisturbed sandy and soft samples from shallow water sediments has been designed by them (Black *et al.* 2002). However, its mechanical structure is relatively complex, compared to the one described in this paper.

Nowadays, with the development of modern science and technology; it is possible to develop a modern corer to avoid factors such as impacts from water movements and from mechanical deficiencies (closing structure) to overcome disturbance of samples.

The purpose of this paper is to introduce a new series of corers for taking undisturbed soft sediment samples; these coreers having advantages of greater reliability, simplicity in structure, light weight, easy and efficient to operate, highly adaptable, and relatively inexpensive to produce.

2. The New Series of Corers

The Single Tube Gravity Corer was designed and developed first. Then, the Gravity Multiple Tube-Corer was developed based on this design but improved in order to take more cores synchronously.

The Single Tube Gravity Corer and the Multiple Tube Gravity Corer can successfully take undisturbed cores in calm conditions. However, when used in rough conditions such as strong currents, large waves, difficult sediment characteristics (such as when sampling of hard sediments is attempted) or when the equipment is operated incorrectly, some sample disturbance may occur. Therefore, it is always necessary to check if the core sample has been successfully collected in an undisturbed state. If our observations indicted that 1% or more of a core was disturbed, the core was discarded.

It is possible that most gravity corers enter into the sediment relatively quickly, so it is impossible to completely eliminate friction drag and prevent sediment smearing

against the tube wall, which might compact the sediment, disturb stratigraphy and cause sampling error.

For the reasonsstated above, the Hydraulic Pressure Multiple Tube-Corer has been preliminarily designed, based on the Multiple Tube Gravity Corer. It is possible that this third corer will be become available when or if the program is funded in the near future.

2.1 Single Tube Gravity Corer

The structure of the Single Tube Gravity Corer is shown diagrammatically in Fig 1 and as a photograph in Fig 2. The head blade is made of stainless steel and the tube (inner diameter 50 mm, and length 1 m) is made of perspex (wall thickness 5 mm) or polycarbonate (wall thickness 1.5 mm). The head blade is not necessary if the tube is made of polycarbonate. The main board is made of stainless steel in order to support the whole sampler system. The valve body is made of perspex and the valve ball of ABS(acrylonitrile butadiene styrene). The low density sphere caged in the valve body is one of the most basic types of closing mechanisms. It is used as a directional flow valve to reduce water resistance. So ABS (density 1.16 g/cm^3) was selected as the material for the valve ball. The valve and the valve ball are the key parts of the corer, which prevent the sample sliding from the tube when the corer is extracted from sediments. The fixing board is made of stainless steel and is fitted with screws. The lead ring is to keep the coring tube vertical while it descends through the water column and penetrates into the sediment. The total weight of the Single Corer is about 25 kg.

Fig1

Fig 2

The operation of the Single Tube Gravity Corer is quite straightforward because of its mechanical simplicity. A defect of some other samplers is that the mechanism may foul or be triggered before samples have been obtained. Fig 1 shows the Single Tube Gravity Corer assembly prior to sediment collection. A metal handle can be used for sample retrieval in shallow water (< 4 m), and a rope attached in deeper waters.

Firstly, lower the corer into surface water slowly and wait for a moment, to make sure that the tube is vertical. It is an important step to sample sediment successfully. Secondly, lower the corer down slowly to 3 m above the bottom, and then let the corer go down as a free fall. The final step is when the tube penetrates into sediment to take a sample by gravity.

When the corer is cast into the water, the ball valve will float while the core goes down towards the bottom sediment. The valve ball will seat in the rubber O-ring and seal the tube by gravity to hold the sample as the tube is hoisted from the sediment and raised through the water column. Regulating the number of lead weights can control the depth of corer penetration into the sediment, enabling the sediment-water interface to be sampled. The corer has several advantages over other sediment samplers: (1) The structure is very simple, so, it is easy and economical to build,(2) It can be operated without a winch, (3) it is more reliable than others, because there is no mechanical movement during sampling, (4) It can be adapted to various situations and surroundings, (5) If the tube is perspex or polycarbonate, it is easy to drill a hole to collect sediment-water interface (pore water) and insert an electrode to measure sediment Eh (redox potential).

2.2 Multiple Tube Gravity Corer

The Multiple Tube Gravity Corer is a relatively simple modification of the Single Tube Gravity Corer. A detailed structure of the Multiple Tube Gravity Corer consisting of three tubes is shown in Fig 3. Compared to the structure of the Single Tube Gravity Corer (Fig 1), the main modified parts of the Multiple Gravity Tube Corer are the head blade (Part A in Fig 3) and the support frame (Part F).

The Multiple Tube Gravity Corer normally consists of three tubes, while it is possible to install up to six tubes. From our past sampling, the Multiple Tube Gravity Corer can efficiently take six cores, so long as the supporting frame is strong enough and spacing of the individual corers is sufficient. Each tube can collect a sediment core on it own without interfering with other corers.

The Multiple Tube Gravity Corer is an assemblage of the Single Tube Gravity Corer, so it has all the advantages of the Single Gravity Tube Corer. However, the Multiple Tube Gravity Corer needs a winch because of its increased weight when containing sediment samples.

Fig3

Fig4

2.3 Hydraulic Pressure Multiple Tube Corer

As stated in the section 2 above, our Hydraulic Pressure Multiple Corer is intended to solve the problems: sample disturbance in rough conditions, reducing friction drag, and preventing sediment smearing against the tube wall and provides almost undisturbed vertical core samples of soft bottom sediment. According to our design, several coring tubes (3-6 tubes) could be assembled on a support stand controlled by a hydraulic pressure device. The hydraulic pressure device will be designed to keep the tubes' movement slow and smooth during the operation, in order to keep the bottom sediment in its original and undisturbed state. A preliminary schematic drawing of the Hydraulic Pressure Multiple Corer (with three tubes) is shown in Fig 5. As it is stated above the Hydraulic Pressure Multiple Tube Corer is possible to become available when or if it is funded in the near future.

Fig5

The whole sampling process of the Hydraulic Pressure Multiple Tube Corer is controlled by a computer. An under-water video camera, which is fixed on the supporting frame, monitors the whole sampling process including sampling station selection. Firstly, the corer is lowered slowly to the bottom and the corer is prevented from sinking into the sediment by the supporting frame. Secondly, the hydraulic pressure device drives the sampling tubes penetration into the sediment slowly and smoothly controlled by the computer. The valve balls are floated to the top of valves to let water go through, when the sampling tubes enter the sediment. Then, when the sampling is finished, the hydraulic pressure device pulls the coring tubes out off the sediment, when the tubes have reached the predetermined depth and the valve balls fall back onto the rubber ring and seal the valve to prevent samples sliding out. Finally, the winch hoists the corer onboard the sampling vessel. Compared to other multiple corers driven by a hydraulic pressure device, our equipment is much simpler, more reliable and more efficient because there are no opening and sealing operations needed during sampling.

ACCEPTED MANUSCRIPT

3. Application

Several Single Tube Gravity Corers and Multiple Tube Gravity Corers have been produced and used by us to take sediment samples in the Pearl River estuary and by other researchers in other places. All results showed that the corers were able to successfully collect sediment samples.

We would like to provide some details of the Pearl River estuary and the process of the sediment sampling there, as follows.

The Pearl River is the third largest river in China and the largest river in southern China, being 2214 km long and with a delta area of 453,690 km^2. It is of a considerable economic and environmental importance. The Pearl River passes through the city of Guangzhou, which is one of the largest cities in China and the largest city in southern China with over 7 million inhabitants. Guangzhou is also an important trading centre as well as a busy port and an industrial base. The climate of Guangzhou is sub-tropical. The average year-round temperature is 22℃. August is the hottest month, with an average temperature of 28℃. January is the coldest month, with an average of 13℃.The rainy season falls between April and August. Average annual rainfall is 1,720 mm.

The Peal River estuary receives and carries most of the outflow from the Pearl River. The discharge into the Pearl River estuary is around 1,500 m^3/s during the dry season, whereas the flow could increase up to 20,000 m^3/s during the wet season. It has 3.36×10^{11} m^3 of freshwater discharge into the South China Sea every year. It is a bell-shaped estuary, nearly 60 km long and 50 km wide at its mouth (outlet). The depth of the estuary averages 9 m, but containing some deeper dredged channels; and its tidal range is 1-2 m.

Industrial and domestic wastewater from the Pearl River Delta area, especially from Guangzhou, has impacted the water quality in the river. Recently it was reported that the mean concentrations of BOD (biochemical oxygen demand) and TN (total nitrogen) in the Pearl River water have both increased by 0.4 mg/L over the last 20 years (Xu 2003).

During our investigation, water samples were taken from all stations-ST1 to ST9; and only three sampling stations-ST2 (water depth 3.5 m), ST5 (7.7 m) and ST9 (18.7 m)-were chosen for taking sediment cores for the research of nitrification, denitrification and nitrate reduction rate in sediments. The distance from the cental Guangzhou to ST2 is about 14 km, to ST5 38 km, and to ST9 82 km. ST2, ST5 and ST9 represent as the upstream site, mid-stream site and downstream site of the estuary; respectively. All of them are along the main river-course axis in the Pearl River estuary. The details are shown in Fig 6.

Fig 6

Nine sediment cores were collected from ST2, ST5 and ST9 in April 2004 with the Single Tube Gravity Corer and the Multiple Tube Gravity Corer. Each core was examined visually (by eye) through the transparent sampling tube whether it had been disrupted or disturbed by sampling process. We adopted a criterion that the core would be discarded if it showed any sign (1% or more) of stratigraphic disruption as indicated in Section 2 above. However, none of our nine sediment cores showed any sign of disrupted stratigraphy when visually assessed. Six cores were used for measuring nitrification and denitrification rates. Sediment pore waters were extracted

ACCEPTED MANUSCRIPT

from the other three cores. The pore water collection process is very simple and is completed by drilling holes through the transparent plastic tube wall and then collecting pore waters for the measurement of NH_4^+ and NO_2^-+NO_3^-. The pore waters were obtained by compressing the whole core line at 0.5 cm intervals. The temperature and Eh were measured with a platinum wire electrode inserted into intact sediments within 6 hours of sampling.

4. Acknowledgements

Authors are appreciated that the program has been financially supported by Chinese National Funding (No. 40676073). Authors are grateful to our colleagues Dr. Qingji Wang, Lei He, Fengqing Zhang and Cuici Sun for their assistance in testing corer's characteristics; to Dr. Robert Bernard Spies and two anonymous referees for their detailed and helpful comments and thoughtful editing on the manuscript; and especially to Phil Sinclair for assistance with English expression and clarification of some technical terms.

ACCEPTED MANUSCRIPT

ACCEPTED MANUSCRIPT

References

Ankar, S., 1977. Digging profile and penetration of the Van Veen grab in different sediment types. Contr. Askö Lab. Univ. Stockh. 16, 1-22.
Barnes, H., 1959. Oceanography and Marine Biology. George Allen & Unwin, London.
Banes, J., Owens, N.P., 1999. Denitrification and nitrous oxide concentrations in the Humber estuary, UK, and adjacent coastal zones. Marine Pollution Bulletin 37, 247-260.
Black, H.J., Dainat, M., Köster, M., 2002. A multiple corer for taking virtually undisturbed samples from shallow water sediments. Estuarine Coastal and Shelf Science 54, 45-50.
Blomqvist, S., 1985. Reliability of core sampling of soft bottom sediment- an in suit study. Sedimentology 32, 605-612.
Blomqvist, S., 1991. Quantitative sampling of soft-bottom sediments: problem and solutions. Marine Ecology Progress Series 72, 295-304.
Ekman, S., 1915. Die Bodenfauna des Vattern, qualitative und quantitative untersucht, Int, Revue ges. Hydrobiol. Hvdrogr. 7, 146-204, 275-425.
Elmgren, R., 1973. Methods of sampling sublitoral soft bottom meiofauna. Oikos Suppl.15, 112-120.Law, C. S., Rees, A. P., Owens, N. J., 1992. Nitrous oxide: estuarine sources and atmospheric flux. Estuarine Coastal and Shelf Science 35, 30 l-314.
Peterson, C.G.J., Jensen, P.B., 1911. Havets bonitering. □. Habundens dyreliv, dets næring og mængde. Beretning til Landbrugsministeriet fra Den danske biologiske Station 20, 1-78.
Riddle, M.J., 1989. Bite profiles of some benthic grab samplers. Estuarine Coastal and Shelf Science 29, 285-292.
Toshihiro U., Isao K., Norio O., 1998. Vertical profiles of nitrous oxide and dissolved oxygen in marine sediments. Marine Chemistry 59, 253-270.
Xu Z., 2003. Marine environment of Zhujiang River estuary and its integrated treatment issues. Journal of tropical oceanography 22, 88-93.

ACCEPTED MANUSCRIPT

ACCEPTED MANUSCRIPT

Figure captions:

Fig 1. The structure of a Single Tube Gravity Corer (a. head blade, b. lead ring, c. eared screw, d. rope, e. coring tube, f. lead weight, g. main assembled board, h. rubber ring, I. valve ball, j. hole for water flowing, k. valve body, l. screw, m. fixing board, n. rope, o. pull ring and p. handle.)

Fig 2. Photograph of a Single Tube Gravity Corer, tube inner diameter: 50mm, length: 1m and wall thickness 5mm (perspex) or 1.5mm (polycarbonate)

Fig 3. The structure of a Gravity Multiple Corer for three tubes (A. head blade, B lead weight. C. lead weight bracket,, D. rope, E. coring tube, F. support frame, G. valve body, H. valve ball, I. hole for water flowing J. rope, K. pull ring L screw joint and M. flat bar.)

Fig 4. Photograph of a Gravity Tube Multiple Corer, coring tube's dimensions are same as Fig 2

Fig 5. Sketch map of Hydraulic Pressure Multiple Corer (1. coring tube, 2. supporting frame, and 3. hydraulic pressure device)

Fig 6. The location of sampling sites

ACCEPTED MANUSCRIPT

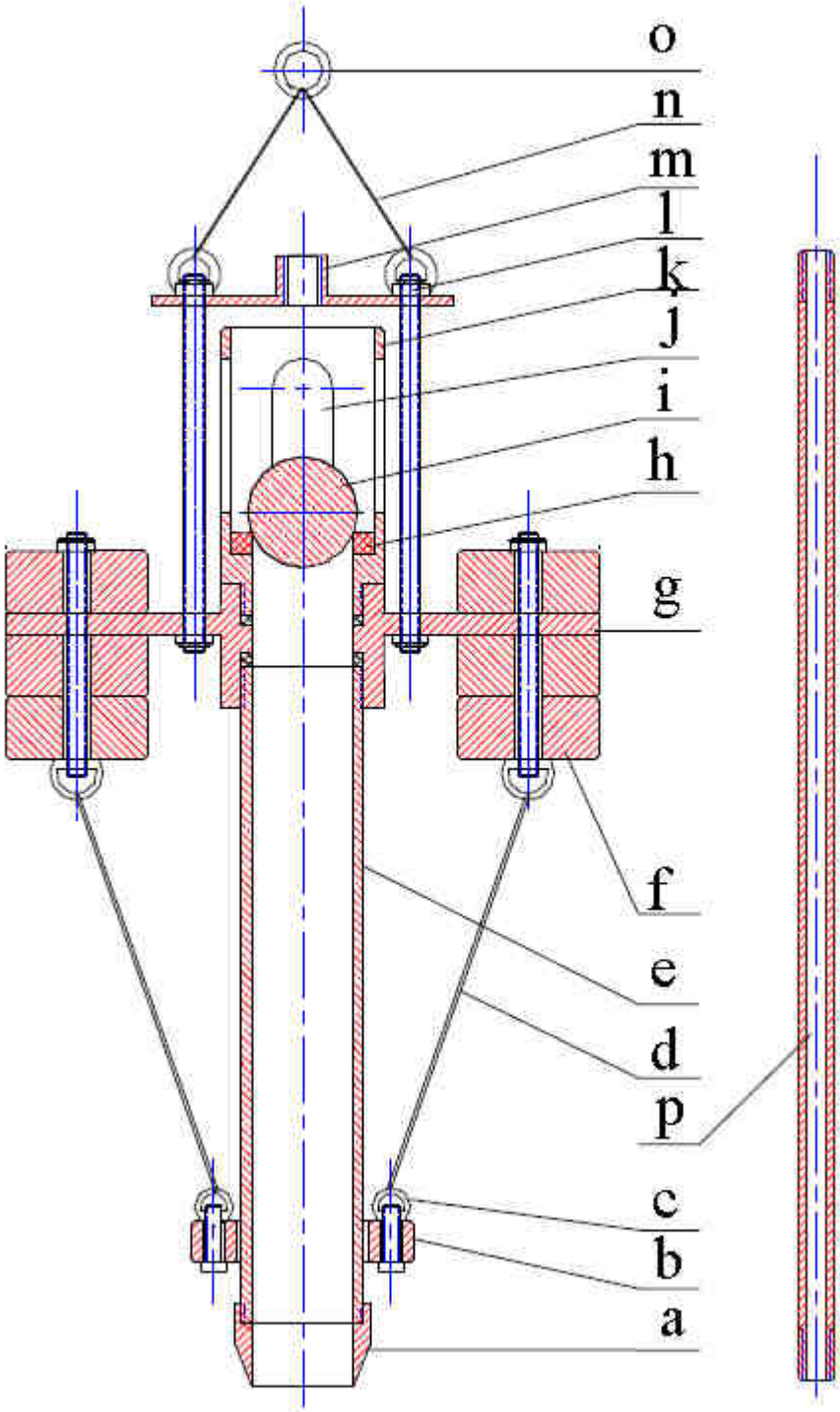

New Series of Corers for Taking Undisturbed Vertical Samples of Soft Bottom Sediments

ACCEPTED MANUSCRIPT

- New single and multiple tubes gravity corers
- The simplest and cheapest equipment for Taking undisturbed sediment sample
- Successfully used to take undisturbed sediment sample in Zhujiang River

ACCEPTED MANUSCRIPT

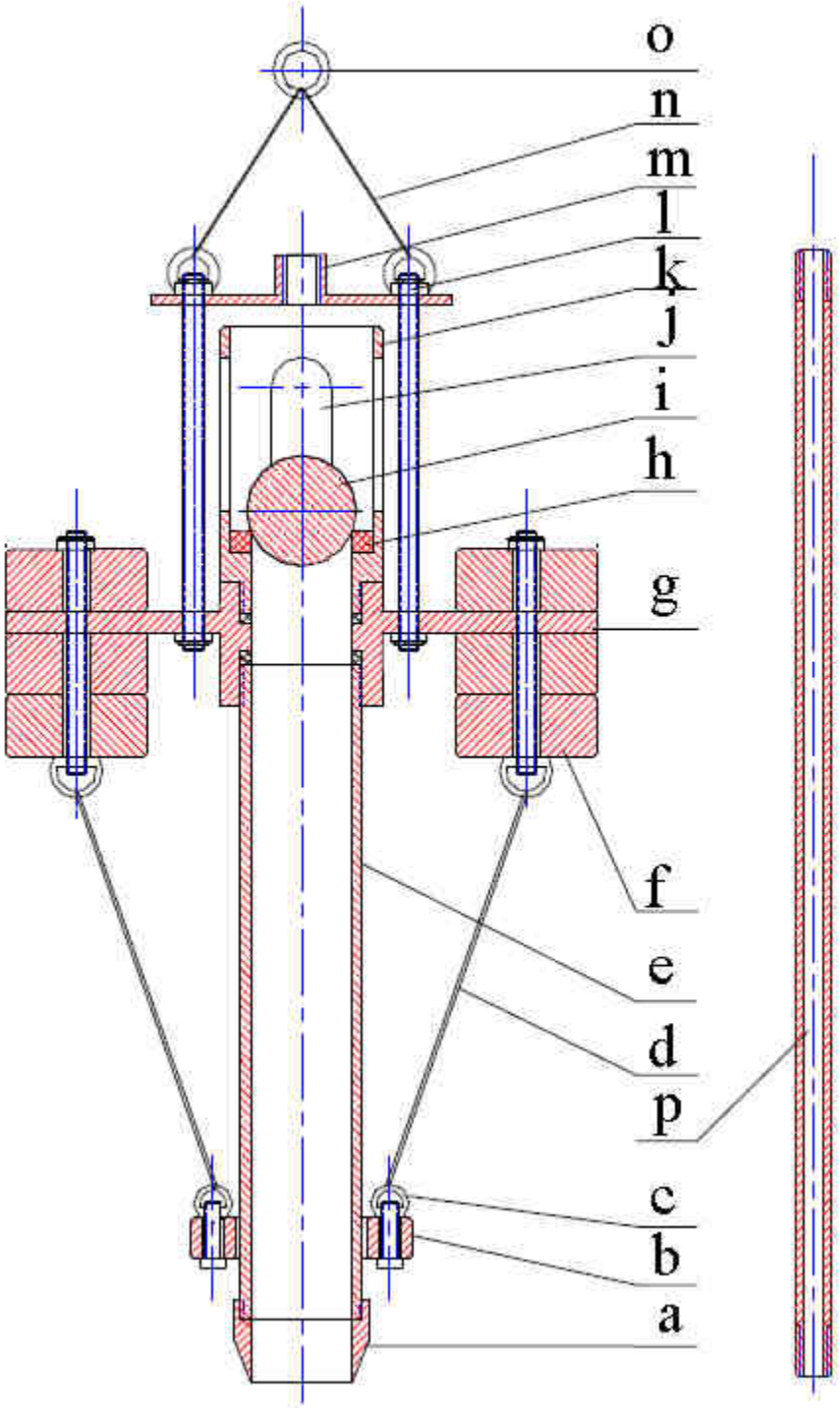

Fig 1

Fig2

ACCEPTED MANUSCRIPT

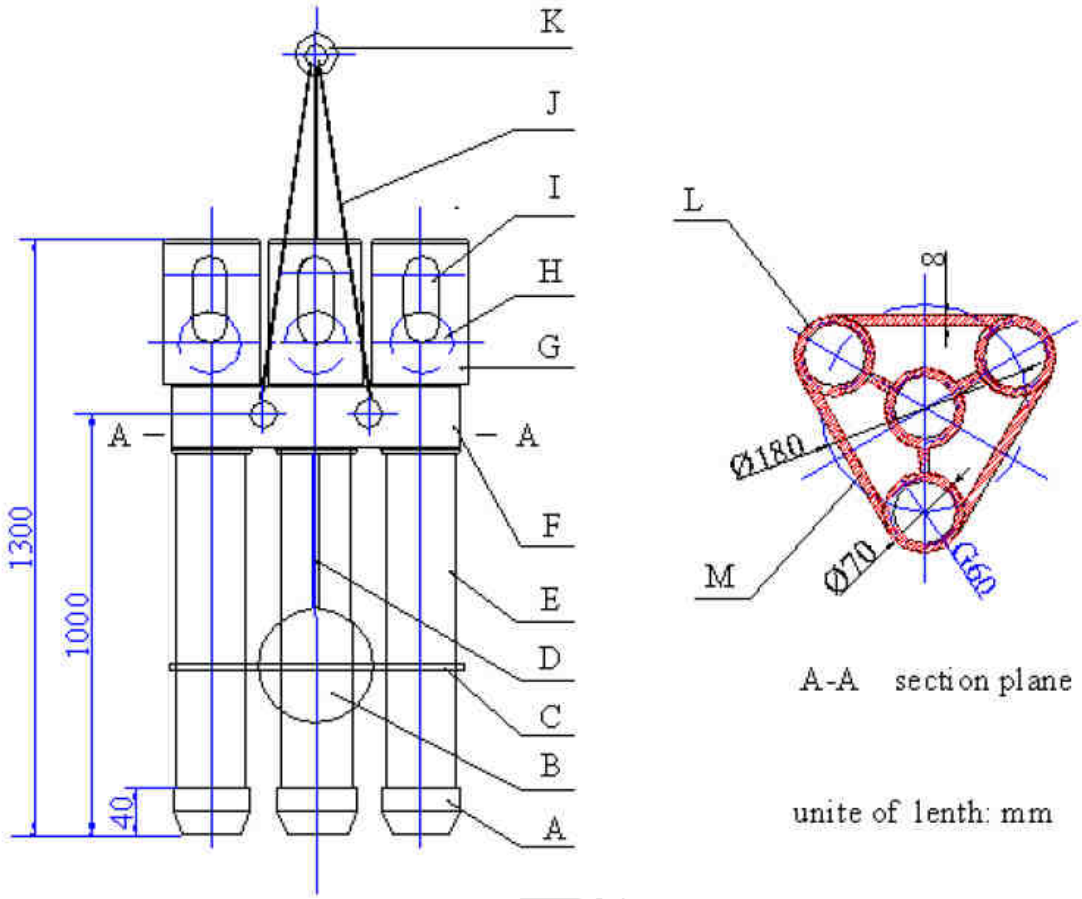

Fig3

ACCEPTED MANUSCRIPT

Fig 4

ACCEPTED MANUSCRIPT

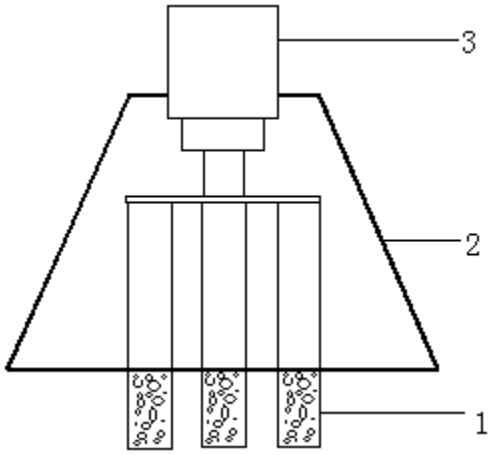
3
2
1

Fig 5

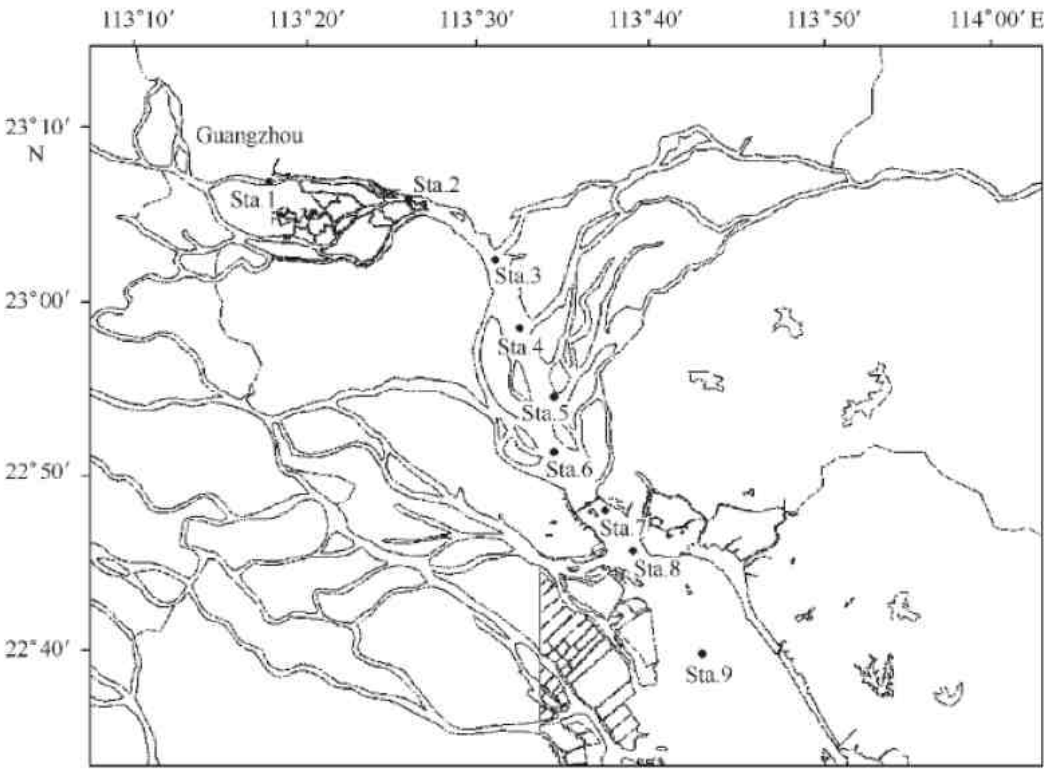
113°10′
113°20′
113°30′
113°40′
113°50′
114°00′ E
23°10′ N
23°00′
22°50′
22°40′
Guangzhou
Sta.1
Sta.2
Sta.3
Sta.4
Sta.5
Sta.6
Sta.7
Sta.8
Sta.9

Fig 6