HAL
open science

Rectenna circuit topologies for contactless energy transfer

Vlad Marian, Christian Vollaire, Jacques Verdier, Bruno Allard

To cite this version:

Vlad Marian, Christian Vollaire, Jacques Verdier, Bruno Allard. Rectenna circuit topologies for contactless energy transfer. Eindhoven, Jun 2011, Eindhoven, Netherlands. hal-00658831

HAL Id: hal-00658831

https://hal.science/hal-00658831

Submitted on 11 Jan 2012

HAL is a multi-disciplinary open access archive for the deposit and dissemination of scientific research documents, whether they are published or not. The documents may come from teaching and research institutions in France or abroad, or from public or private research centers.

L'archive ouverte pluridisciplinaire **HAL**, est destinée au dépôt et à la diffusion de documents scientifiques de niveau recherche, publiés ou non, émanant des établissements d'enseignement et de recherche français ou étrangers, des laboratoires publics ou privés.

RECTENNA CIRCUIT TOPOLOGIES FOR CONTACTLESS ENERGY TRANSFER

Vlad Marian[1], Christian Vollaire[1], Jacques Verdier[2], Bruno Allard[1]

[1] Ecole Centrale de Lyon, INSA Lyon, AMPERE, UMR 5005, 36 Av. Guy de Collongues, F-69134 Ecully, France
[2]Institut de Nanotechnologies de Lyon (INL) – UMR 5270, INSA Lyon, F-69621 Villeurbanne, France
vlad.marian@ec-lyon.fr

Abstract: This paper describes several rectifying antenna (rectenna) circuit topologies designed for microwave contactless energy transfer, depending on the desired application and input power range. Circuits for low, medium and high power density are presented. Applications include wireless supply of sensors or other low power devices over distances of several meters. High sensitivity designs offer the possibility of harvesting ambient microwave energy. The circuits presented are tuned for a central frequency of 2.45 GHz.

Keywords: rectenna, contactless energy transfer, RF-DC conversion

INTRODUCTION

The last decade has been characterized by massive development of a wide range of portable electronic devices, both consumer devices like smartphones but also industrial applications, like wireless sensor networks [1]. These devices offer many functions but their autonomy is limited because the trade-off on batteries regarding size and power density. Batteries need to be periodically recharged. Most often the charge relies on a wired charger, which somehow limits the portability of a wireless device. Wireless supply systems are supposed to improve the availability, the reliability and the user-friendliness of portable electronic devices.

Several different approaches of wireless power supply can be distinguished. Near-field inductive coupling works on very small distances, typically limited to a few centimeters, but are characterized by very good efficiencies [2]. This is widely used for wireless recharging of the internal battery of consumer items like an electric toothbrush or wireless mouse.

Magnetic resonant coupling between two structures (usually circular coils) allows energy transfer in the near field area. Operating frequencies are relatively low (in the MHz range), making emitter and receiver quite large [3]. The main limitation of this method is that energy can only be transferred over relatively low distances (although higher than the inductive coupling zone). Distances are generally in the same order of magnitude as emitter and receiver sizes and an efficient transfer is only achieved around an optimal operating point [4]. Transmitter-to-receiver efficiencies can reach 70 % over distances under one meter but wall-to-load efficiency is under 20 %.

Energy can also be transmitted based on a radiative high frequency field. It uses high frequency electromagnetic waves, often above 1 GHz, and energy transfer is done in the far field region. High power transfer over several kilometers has been achieved with efficiencies sometimes in excess of 70 % [5], but the number of viable applications at these power levels tends to be limited due to health and safety regulations and impact of large antenna.

This technique is more often used to supply UHF RFID over distances sometimes in excess of 10 meters using high frequency radio waves [6]. The concept of wireless energy transfer can also be applied in order to supply low power electronic devices like industrial sensors or sensor networks. These devices can either be supplied exclusively by the energy from the microwave beam [7] or by batteries that can be remotely recharged [8].

A typical example of application is described in Fig. 1. The purpose is to supply energy to a battery-powered sensor placed in an inaccessible area [9]. Batteries can be recharged periodically once their level becomes low. Three possible situations are illustrated.

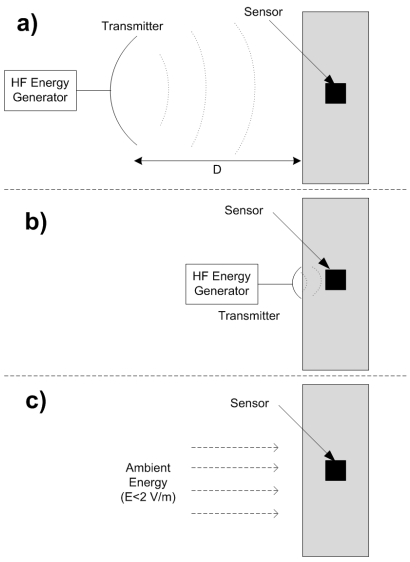

Fig. 1: Example of application of wireless energy transfer: supplying a remote sensor; a) distant recharging; b) proximity recharging; c) ambient energy harvesting.

The first situation consists of intentionally sending RF energy from a distant, high gain emitter antenna. For an emitted power of 1 W from 5 meters, roughly

10 mW can be collected and supplied to the sensor with a compact and high gain receiving antenna (Fig. 1(a)). The second recharge strategy is to provide a proximity wireless energy transfer by placing a much more compact emitter in contact with the sensor area in the direction of the sensor (Fig. 1(b)). An estimated 20 % of the emitted energy (100 mW) is potentially recoverable at receiver level, much higher than in the previous case. The third scenario takes advantage of the ever increasing amount of electromagnetic radiation present in our environment, mainly due to the massive development of wireless communications (Fig. 1(c)).

The most frequently encountered frequency bands are situated around 900/1800 MHz, 2 GHz and 2.45 GHz, corresponding to standards like GSM/DCS, UMTS and WLAN respectively. Measurement campaigns have shown that typical power levels at 25 to 100 meters distance from a GSM base station reach several µW/cm², especially in urban areas [10]. About the same power levels have been detected several meters from a WLAN access point. These low energy levels can provide an alternative power source to ubiquitous devices, under certain conditions and be used to continuously harvest energy from ambient environment to boost the life of the device battery [11].

RECTENNA CIRCUIT CONFIGURATION

Depending on the considered scenario, different "rectifying antenna" (rectenna) topologies are to be used.

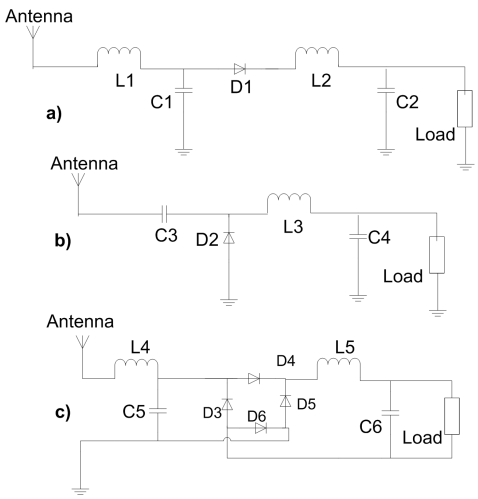

Fig. 2: Rectenna circuit topologies: a) Single series-mounted diode; b) Single shunt-mounted diode; c) Diode bridge.

A. Series mounted diode

The basic structure of a series mounted diode is shown in Fig. 2(a). As this structure is dedicated to low power levels (below 0 dBm), power handling capabilities can be traded for high sensitivity. The choice was made to use HSMS2850 zero bias Schottky diodes that have low power handling capabilities but low threshold voltage (150 mV) and low junction capacitance (0.18 pF).

Rectenna circuits have a highly nonlinear behavior mostly because of the diode rectification process. It is not practical to design sub-parts independently because they highly interact with each other. The load of the input filter depends on the diode and the output filter at the diode extremity.

For this reason, a global circuit optimization technique must be used for dimensioning the passive components of the filter elements. These optimizations were made with the software ADS (with Momentum) from Agilent Technologies.

The efficiency is measured with respect to the rectenna load at -5 dBm of input power (Fig. 3). The maximum efficiency is obtained for 2.4kΩ when the output voltage is 620 mV.

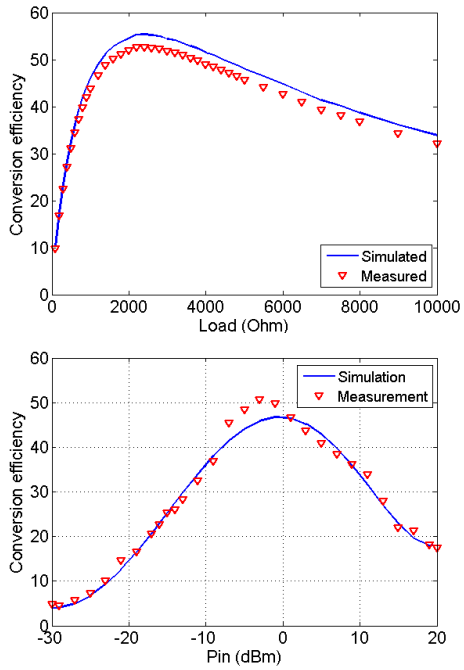

Fig. 3: Efficiency of the series-mounted diode rectenna versus load and input power

Fig. 3 also traces the evolution of the RF-to-DC energy conversion efficiency as a function of the incident RF power level. The rectenna load has been tuned to obtain the maximum power point efficiency for a given input power level. Maximum conversion efficiency of roughly 50 % is reached between -5 dBm and 0 dBm (1 mW) of incident power. At lower power levels the efficiency is lower because of the threshold voltage of the diode which is comparable to the amplitude of the incident signal. For high power levels, internal diode losses become significant due to the diode series resistance.

The output DC voltage level of the single series-mounted diode rectifier is 400 mV at -15 dBm, 2.1 V at 0 dBm and 3.75 V at 10 dBm of incident power respectively.

B. Shunt mounted diode

A second rectenna structure has been designed for the 0 dBm to 20 dBm power input range. The diode is

shunt mounted as shown in Fig. 2(b). At these power levels, the threshold voltage has less impact on the circuit performances. The main objective is to lower the internal loss inherent to the rectifier diode and to increase power handling capabilities. The diode used for this structure has a threshold voltage level of 350 mV (HSMS2860 by Agilent). The internal resistance is 6 Ohm and the breakdown voltage is 7 volts. Input and output filters were dimensioned using the same optimization techniques as previously mentioned.

The structure reaches maximum conversion efficiencies of 70 % for an input power of +15 dBm, as shown in Fig. 4. The conversion efficiency has a similar dependency with respect to load impedance to that presented in Fig. 3, with an optimal load is 750Ω for +15dBm input power at a frequency of 2.45GHz.

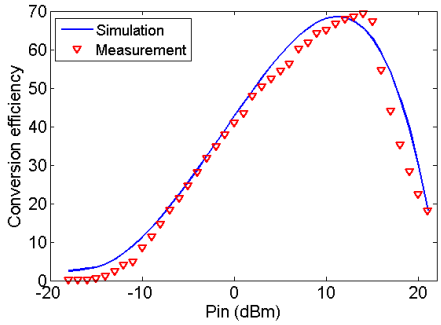

Fig. 4: Efficiency of the shunt-mounted diode rectenna versus input power at optimal load

Compared to the single series-mounted diode, this structure has lower efficiency for low power levels. For power levels above 15 dBm, the efficiency decreases rapidly due to the internal diode ohmic loss. The DC voltage output level is 335 mV @ 0 dBm, 1.45 V @ 10 dBm and 4 V @ 20 dBm respectively.

C. Bridge rectifier

The bridge mounted rectifier topology is widely used in low frequency AC-DC conversion. Its structure is presented in Fig. 2(c).

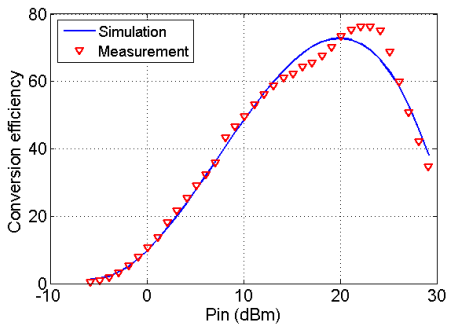

Fig. 5: Efficiency of the bridge rectifier versus input power at optimal load

In the bridge topology, a full wave rectification is used and both positive and negative half-wave have to overcome two diode threshold voltages. This is the reason why this structure is not adapted for low power levels. It presents however the advantage of high power handling capabilities, if high breakdown voltage diodes are considered (HSMS2820 by Agilent, 15V, 6 Ohm series resistance device).

The evolution of RF-to-DC conversion efficiency of the bridge rectifier is presented in Fig. 5. A peak of 78 % is reached at 23 dBm of input power, after which conversion efficiency decreases rapidly. The optimal load is 200Ω for +23dBm input power. The DC voltage output is 1.1 V @ 10 dBm, 4.2 V @ 20 dBm and reaches 9.3 V @ 30 dBm respectively.

The bridge topology was also fabricated using a GaAs depletion/accumulation pseudomorphic HEMT process with 0.18 µm gate length (Fig. 6). RF-DC conversion efficiencies in excess of 80% are measured at 30 dBm of input power for an optimal load of around 200Ω.

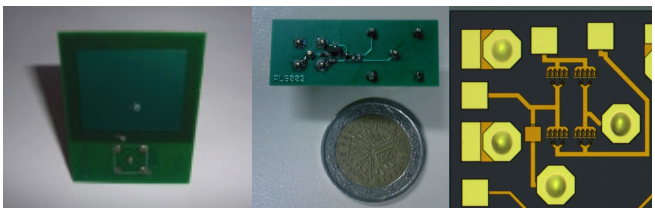

Fig. 6: Photographs of the fabricated rectenna prototypes. SMD technology (left); IC technology (right)

APPLICATIONS

In the case of remote wireless sensors, the main issue is the autonomy of its energy source. A wireless sensor has three main functions. It first measures one or more parameters, based on which it makes a series of calculations, before sending out the result to a reading station, usually through a radio link of IR.

Contactless energy transfer can be used to power this type of devices, depending on their energy requirements. A device that needs important amounts or a continuous supply of energy could have their batteries periodically recharged using a dedicated microwave emitter situated in its proximity. If the system only needs to make a measurement "upon demand", it can be completely passive, without an embedded energy source. A microwave emitter briefly charges a super-capacitor with the amount of energy needed for making the measurement and sending the result back, as in the case of RFID tags.

A third possibility of boosting the device's autonomy is to constantly recharge its batteries by harvesting electromagnetic energy, using a receiver antenna or antenna array, a rectenna optimized for low power levels and a DC-DC boost converter for elevating the voltage level to a value directly usable by an electronic circuit.

In order to illustrate the feasibility of such a system, we used a two stage voltage doubler rectenna topology (Fig. 7) fabricated in SMD technology which was designed for low power levels connected to a four patch antenna array.

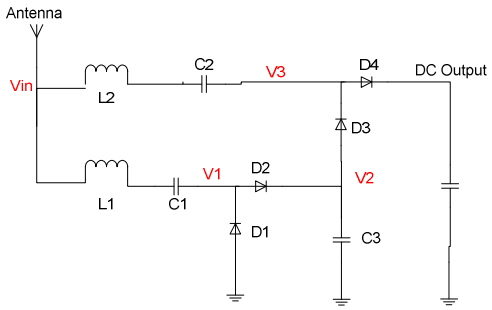

Fig. 7: Complete schematics of the two stage voltage doubler rectifying circuit

The system was enlightened by a plane wave in order to evaluate the total amount of recoverable DC voltage as a function of the electric field strength. We used a 9dBi horn antenna connected to the microwave signal generator as a microwave emitter and we placed the receiver at different distances from the emitter. The output power of the signal generator was set at 500mW.

The output of the rectenna continuously charges a 15 mF super-capacitor. The maximum voltage level of this capacitor is measured as a function of the distance from the emitter. The results are presented in Fig. 8.

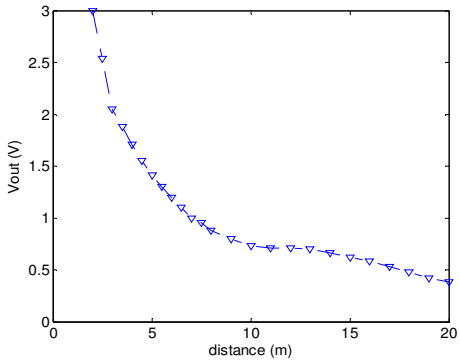

Fig. 8: Output DC voltage as a function of the distance between the emitter and the receiver

Measurements show that relatively high output voltages are generated at important distance from the emitter (0.4V at 20 m). The corresponding strength of the electric field at a distance of 20m from the emitter is about 0.5V/m. In terms of power density, this represents about 660µW/m², a typical value at a distance of several tens of meters from a GSM base-station. Even at these relatively low power densities, a total of 5 µW of power were continuously generated, with an RF-DC conversion efficiency of around 5%. This confirms that usable DC electric power can be recovered from a relatively low microwave electric field using carefully designed RF/DC rectifiers and antenna arrays.

The amount of recovered power can be increased by improving the total area of the reception antenna. Adding a DC-DC charge pump enables the continuous harvested energy to supply a low power sensor or to charge a small rechargeable battery or a super capacitor. The complete system presents itself as a viable alternative to replace batteries for very low-power applications or intermittent applications.

CONCLUSIONS

Several rectenna circuit topologies have been studied and tested, each for a specific power range and application. Good performances have been obtained in terms of RF-DC conversion efficiency and DC output voltage level. An energy harvesting system capable of transforming a low energy electromagnetic wave into a usable DC voltage has been presented, with good conversion efficiency at very low incident power levels, comparable to those encountered at a distance of several tens of meters from a GSM base-station or in an urban area.

REFERENCES

[1] V. C. Gungor and G. P. Hancke, “Industrial Wireless Sensor Networks: Challenges, Design Principles, and Technical Approaches,” IEEE Transactions on Industrial Electronics, vol. 56, no. 10, pp. 4258–4265, Oct. 2009.

[2] J. J. Casanova, Z. N. Low, and J. Lin, “A Loosely Coupled Planar Wireless Power System for Multiple Receivers,” IEEE Transactions on Industrial Electronics, vol. 56, no. 8, pp. 3060–3068, Aug. 2009.

[3] A. Karalis, J. Joannopoulos, and M. Soljacic, “Efficient wireless non-radiative mid-range energy transfer,” Annals of Physics, vol. 323, no. 1, pp. 34–48, 2008.

[4] A. P. Sample, D. a. Meyer, and J. R. Smith, “Analysis, Experimental Results, and Range Adaptation of Magnetically Coupled Resonators for Wireless Power Transfer,” IEEE Transactions on Industrial Electronics, vol. 58, no. 2, pp. 544–554, Feb. 2011.

[5] J. McSpadden and J. Mankins, “Space solar power programs and microwave wireless power transmission technology,” IEEE Microwave Magazine, vol. 3, no. 4, pp. 46–57, Dec. 2002.

[6] S. Mandal and R. Sarpeshkar, “Low-Power CMOS Rectifier Design for RFID Applications,” IEEE Transactions on Circuits and Systems I: Regular Papers, vol. 54, no. 6, pp. 1177–1188, June 2007.

[7] A. Ashry, K. Sharaf, and M. Ibrahim, “A compact low-power UHF RFID tag,” Microelectronics Journal, vol. 40, no. 11, pp. 1504–1513, Nov. 2009.

[8] J. Essel, D. Brenk, J. Heidrich, H. Reinisch, G. Hofer, G. Holweg, and R. Weigel, “Highly efficient multistandard RFIDs enabling passive wireless sensing,” in 2009 Asia Pacific Microwave Conference. IEEE, Dec. 2009, pp. 2228–2231.

[9] T. Harms, S. Sedigh, and F. Bastianini, “Structural Health Monitoring of Bridges Using Wireless Sensor Networks,” IEEE Instrumentation & Measurement Magazine, vol. 13, no. 6, pp. 14–18, Dec. 2010.

[10] H. J. Visser, A. C. F. Reniers, and J. A. C. Theeuwes, “Ambient RF Energy Scavenging: GSM and WLAN Power Density Measurements,” 38th European Microwave Conference. IEEE, Oct. 2008, pp. 721–724.

[11] R. Vullers, H. Visser, B. het Veld, and V. Pop, “RF Harvesting Using Antenna Structures On Foil,” in Proc. of PowerMEMS, 2008, pp. 209–212.