HAL
open science

# Singularity Analysis of the 4-RUU Parallel Manipulator using Grassmann-Cayley Algebra

Semaan Amine, Mehdi Tale-Masouleh, Stéphane Caro, Philippe Wenger, Clément M. Gosselin

## To cite this version:

Semaan Amine, Mehdi Tale-Masouleh, Stéphane Caro, Philippe Wenger, Clément M. Gosselin. Singularity Analysis of the 4-RUU Parallel Manipulator using Grassmann-Cayley Algebra. The 2011 CCToMM Symposium on Mechanisms, Machines, and Mechatronics, Jun 2011, Montréal, Canada. pp.1-12. hal-00642267

**HAL Id: hal-00642267**

**https://hal.science/hal-00642267v1**

Submitted on 17 Nov 2011

**HAL** is a multi-disciplinary open access archive for the deposit and dissemination of scientific research documents, whether they are published or not. The documents may come from teaching and research institutions in France or abroad, or from public or private research centers.

L'archive ouverte pluridisciplinaire **HAL**, est destinée au dépôt et à la diffusion de documents scientifiques de niveau recherche, publiés ou non, émanant des établissements d'enseignement et de recherche français ou étrangers, des laboratoires publics ou privés.

# Singularity Analysis of the 4-RUU Parallel Manipulator using Grassmann-Cayley Algebra

S. Amine[1], M. Tale Masouleh[2], S. Caro [1], P. Wenger [1], C. Gosselin [2]

[1]*Institut de Recherche en Communications et Cybernétique de Nantes, Nantes, France,*
{*semaan.amine, stephane.caro, philippe.wenger*}*@irccyn.ec-nantes.fr*

[2]*Département de Génie Mécanique, Université Laval, Québec, Canada,*
*mehdi.tale-masouleh.1@ulaval.ca, gosselin@gmc.ulaval.ca*

**Abstract**

This paper deals with the singularity analysis of $4$-DOF parallel manipulators with identical limb structures performing Schönflies motions, namely, three independent translations and one rotation about an axis of fixed direction. The $6 \times 6$ Jacobian matrix of such manipulators contains two lines at infinity among its six Plücker lines. Some points at infinity are thus introduced to formulate the superbracket of Grassmann-Cayley algebra, which corresponds to the determinant of the Jacobian matrix. By exploring this superbracket, all the singularity conditions of such manipulators can be enumerated. The study is illustrated through the singularity analysis of the 4-RUU parallel manipulator.

**Keywords:** parallel manipulator, singularity, Schönflies motions, Grassmann-Cayley algebra, superbracket.

## Analyse de Singularités du Manipulateur Parallèle 4-RUU au moyen de l'Algèbre de Grassmann-Cayley

**Résumé**

Cet article traite de l'analyse des singularités de manipulateurs parallèles à quatre degrés de liberté ayant des jambes identiques, générant des mouvements dits de Schönflies, c.à.d., trois translations indépendantes et une rotation autour d'un axe de direction fixe. La matrice Jacobienne $6 \times 6$ de ces manipulateurs contient deux lignes à l'infini parmi ses six lignes de Plücker. Quelques points à l'infini sont ainsi introduits pour formuler le superbracket de l'algèbre de Grassmann-Cayley qui est correspond au déterminant de la matrice jacobienne. En examinant ce superbracket, toutes les conditions de singularités de ces manipulateurs peuvent être énumérées. Les contributions de l'article sont illustrées à travers l'analyse de singularités du manipulateur parallèle 4-RUU.

**Mots-clé:** manipulateur parallèle, singularités, mouvements de Schönflies, algèbre de Grassmann-Cayley, superbracket.

## 1 INTRODUCTION

The singular configurations of Parallel Manipulators (PMs) are critical poses characterized by either the loss of some degrees of freedom (DOF), the gain of some extra DOF or the loss of stiffness. The determination of singular configurations is thus a central issue in robotics due to their major effect on the robot performance [1, 2]. Lower-mobility PMs are suitable for a wide range of applications that require fewer than six DOF. The classification of singularities for lower-mobility PMs has stimulated the interest of many researchers [3–6]. In this paper, the classification proposed in [4], which is similar the one proposed in [7], is adopted. Accordingly, a lower-mobility PM can exhibit three different types of singularities: ($i$) limb singularities, ($ii$) platform singularities [4], also known as constraint singularities [8] and ($iii$) actuation singularities, also called architecture singularities [7]. Constraint and actuation singularities are referred to as *parallel singularities* and are related to the rank deficiency of the $6 \times 6$ Jacobian matrix **J** of the PM.

The determination of the parallel singularities of a PM consists in finding either the poses, yielding the singularity locus, or the conditions, yielding the configurations, for which **J** becomes rank-deficient. Generally, **J** expresses a system of screws or more precisely Plücker lines. In this paper, **J** is determined by using the theory of reciprocal screws [9–13]. For most manipulators, the determinant of such a matrix is highly nonlinear and unwieldy to assess even with a computer algebra system. Hence, linear algebra fails to provide satisfactory results, and therefore, the use of Grassmann-Cayley Algebra (GCA) [2, 13–15] or Grassmann Geometry (GG) [1, 16–18] can be regarded as a promising solution. The GCA is a systematic approach to obtain a bracket representation of the determinant of **J**, called *superbracket*. By exploring this superbracket, it is possible to obtain a vector form and a geometrical interpretation of the parallel singularities. On the other hand, GG is a geometric approach that provides a classification for the conditions under which a set of $n$ Plücker lines spans a variety of dimension lower than $n$. This paper focuses on the application of GCA to provide a compact vector expression for the singularity locus of 3T1R PMs with identical limb structures.

Schönflies Motion Generators (SMGs) [19] are manipulators performing three independent translations and one rotation about an axis of fixed direction. This type of motion is required in a wide range of industrial pick and place operations such as the assembly of computer circuit boards. The type synthesis of parallel SMGs with identical limb structures, performed in [12], leads to four kinematic architectures[1]: $4$-$\underline{\mathsf{R}}$UU, $4$-$\underline{\mathsf{P}}$UU, $4$-$\underline{\mathsf{R}}$RUR and $4$-$\underline{\mathsf{P}}$RUR. For instance, as an important criterion, the kinematic arrangements $\underline{\mathsf{R}}$UU and $\underline{\mathsf{P}}$UU require two links whereas the other ones require at least three links. In this paper, we focus on the singularity analysis of the $4$-$\underline{\mathsf{R}}$UU PM based on GCA. The remainder of the paper is organized as follows. First, the superbracket decomposition of GCA and some fundamental concepts of the projective space $\mathbb{P}_3$ are recalled. Then, the $4$-$\underline{\mathsf{R}}$UU PM is presented and its constraint analysis is performed in order to determine its Jacobian matrix **J**. A superbracket of the PM is then formulated. Finally, the singularity conditions of the $4$-$\underline{\mathsf{R}}$UU PM are enumerated and some singular configurations are illustrated.

[1] R, P and U stand for a revolute joint, a prismatic joint and a universal joint, respectively, while an underline is used to denote the actuated joints.

## 2 GRASSMANN-CAYLEY ALGEBRA

The GCA was developed by H. Grassmann (1809–1877) as a calculus for linear varieties operating on *extensors* with the *join* "$\vee$" and *meet* "$\wedge$" operators. The latter are associated with the *span* and *intersection* of vector spaces of extensors characterized by their *step*. GCA makes it possible to work at the symbolic level, and therefore, to produce coordinate-free algebraic expressions for the singularity conditions of spatial PMs. For further details on GCA, the reader is referred to [2,14,20] and references therein.

### 2.1 Superbracket decomposition

The rows of the Jacobian matrix **J** of a PM are usually Plücker coordinate vectors of six projective lines. The superjoin of these six vectors in $\mathbb{P}_5$ corresponds to the determinant of **J** up to a scalar multiple, which is the superbracket in GCA $\Lambda(V^{(2)})$ [20]. Thus, a singularity occurs when this superbracket vanishes. The superbracket is an expression involving $12$ points selected on the six lines and can be developed into a linear combination of $24$ bracket monomials [2, 21], each one being the product of three brackets of four projective points:

$$[\mathtt{ab},\ \mathtt{cd},\ \mathtt{ef},\ \mathtt{gh},\ \mathtt{ij},\ \mathtt{kl}] = \sum_{i=1}^{24} y_i \tag{1}$$

where

$$\begin{array}{lll}
y_1 = -[\mathtt{abcd}][\mathtt{efgi}][\mathtt{hjkl}] & y_2 = [\mathtt{abcd}][\mathtt{efhi}][\mathtt{gjkl}] & y_3 = [\mathtt{abcd}][\mathtt{efgj}][\mathtt{hikl}] \\
y_4 = -[\mathtt{abcd}][\mathtt{efhj}][\mathtt{gikl}] & y_5 = [\mathtt{abce}][\mathtt{dfgh}][\mathtt{ijkl}] & y_6 = -[\mathtt{abde}][\mathtt{cfgh}][\mathtt{ijkl}] \\
y_7 = -[\mathtt{abcf}][\mathtt{degh}][\mathtt{ijkl}] & y_8 = [\mathtt{abdf}][\mathtt{cegh}][\mathtt{ijkl}] & y_9 = -[\mathtt{abce}][\mathtt{dghi}][\mathtt{fjkl}] \\
y_{10} = [\mathtt{abde}][\mathtt{cghi}][\mathtt{fjkl}] & y_{11} = [\mathtt{abcf}][\mathtt{dghi}][\mathtt{ejkl}] & y_{12} = [\mathtt{abce}][\mathtt{dghj}][\mathtt{fikl}] \\
y_{13} = -[\mathtt{abdf}][\mathtt{cghi}][\mathtt{ejkl}] & y_{14} = -[\mathtt{abde}][\mathtt{cghj}][\mathtt{fikl}] & y_{15} = -[\mathtt{abcf}][\mathtt{dghj}][\mathtt{eikl}] \\
y_{16} = [\mathtt{abdf}][\mathtt{cghj}][\mathtt{eikl}] & y_{17} = [\mathtt{abcg}][\mathtt{defi}][\mathtt{hjkl}] & y_{18} = -[\mathtt{abdg}][\mathtt{cefi}][\mathtt{hjkl}] \\
y_{19} = -[\mathtt{abch}][\mathtt{defi}][\mathtt{gjkl}] & y_{20} = -[\mathtt{abcg}][\mathtt{defj}][\mathtt{hikl}] & y_{21} = [\mathtt{abdh}][\mathtt{cefi}][\mathtt{gjkl}] \\
y_{22} = [\mathtt{abdg}][\mathtt{cefj}][\mathtt{hikl}] & y_{23} = [\mathtt{abch}][\mathtt{defj}][\mathtt{gikl}] & y_{24} = -[\mathtt{abdh}][\mathtt{cefj}][\mathtt{gikl}]
\end{array}$$

A bracket $[\mathtt{abcd}]$ is null if and only if (iff) the projective points $\mathtt{a}$, $\mathtt{b}$, $\mathtt{c}$ and $\mathtt{d}$ are coplanar.

### 2.2 Projective space

The 3-dimensional projective space $\mathbb{P}_3$ is characterized by the affine space $\mathbb{R}^3$ in addition to the plane at infinity $\Omega_\infty$. It is noteworthy that the coordinates of a projective element are determined up to a scalar multiple. A projective point has four homogeneous coordinates whereas a projective line has six Plücker coordinates represented by its Plücker coordinate vector. The following properties highlight the relations between projective elements:

- A finite point, $A$, is represented by its homogeneous coordinates vector $\mathtt{a} = (a_1,\ a_2,\ a_3,\ 1)^T$, the first three coordinates being its Cartesian coordinates in $\mathbb{R}^3$;
- A finite line, $\mathcal{L}$, is represented by its Plücker coordinates vector $F = (\mathbf{s};\ \mathbf{r} \times \mathbf{s})$; where **s** is a unit vector along the line direction, $(\mathbf{r} \times \mathbf{s})$ represents the moment of $\mathcal{L}$ with respect to the origin and **r** is the position vector of any point on $\mathcal{L}$;

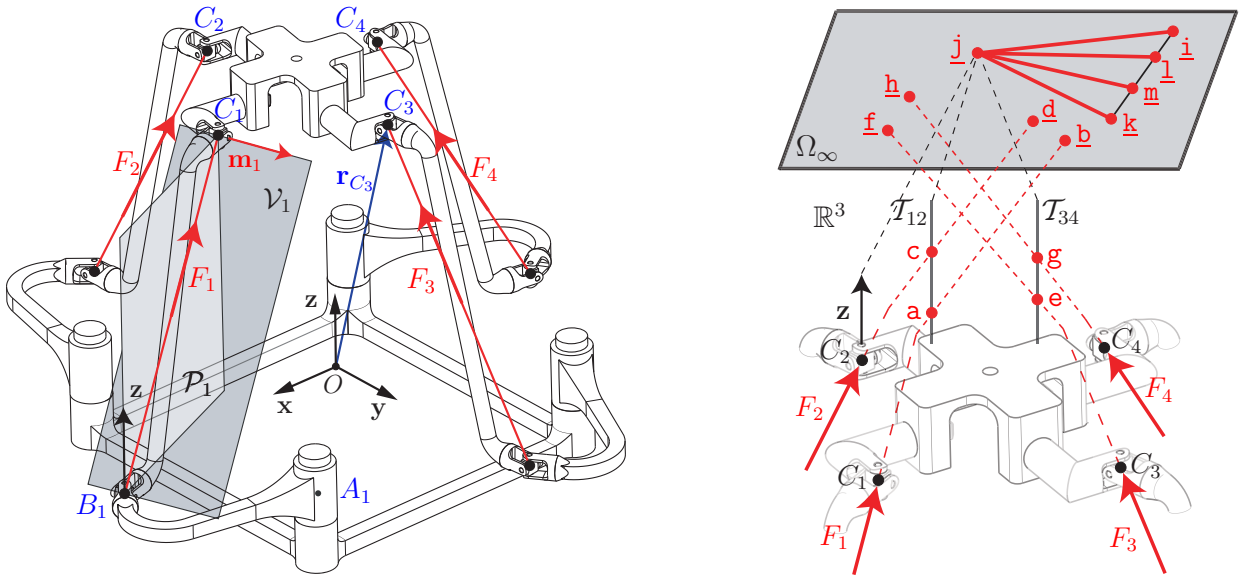


(a) CAD model.

(b) Wrench graph in $\mathbb{P}_3$.

Figure 1: A 4-RUU PM.

- Let underlined points denote points at infinity. Any finite line, $F = (\mathbf{s}; \mathbf{r} \times \mathbf{s})$, has a unique point at infinity $\underline{\mathtt{c}} = (\mathbf{s}; 0)$. This point only depends on the line direction and is determined up to a scalar multiple. Accordingly, if $\mathtt{a}$ and $\mathtt{b}$ are two finite points on $F$, then $\underline{\mathtt{c}} = \mathtt{b} - \mathtt{a}$. Furthermore, all finite lines directed along $\mathbf{s}$ intersect at one common point at infinity, namely, $\underline{\mathtt{c}}$;

- All finite planes of normal vector $\mathbf{m}$, have a common line at infinity. This line is given by: $M = (\mathbf{0}; \mathbf{m})$ and passes through the point at infinity of any finite line orthogonal to $\mathbf{m}$;

- Two lines at infinity $M_1 = (\mathbf{0}; \mathbf{m}_1)$ and $M_2 = (\mathbf{0}; \mathbf{m}_2)$ intersect at a unique point at infinity $\underline{\mathtt{g}} = (\mathbf{m}_1 \times \mathbf{m}_2; 0)$.

## 3 Jacobian Matrix of the 4-RUU PM

### 3.1 Architecture review and kinematic modeling

Figure 1(a) represents the CAD model of a 4-RUU PM, which consists of a fixed base and a moving platform connected to each other with four identical RUU limbs. The input of the mechanism is provided by four revolute actuators attached to the base. From [12], the geometric characteristics of each limb are:

1. Each limb is composed of five revolute joints such that the second and the third ones, as well as the fourth and the fifth ones, are built with intersecting and perpendicular axes and are thus assimilated to U-joints of central points $B_i$ and $C_i$, respectively;

2. The axes of the first, second and fifth revolute joints of the $i$-th limb are parallel to a fixed direction along $\mathbf{z}$. Let $\mathbf{f}_i$ be the unit vector directed along line $B_iC_i$. Thus, the plane $\mathcal{P}_i$

defined by the axes of the second and the last revolute joints has $(\mathbf{z} \times \mathbf{f}_i) = \mathbf{m}_i$ as normal vector;

3. The third and the fourth revolute joints of the $i$-th limb have axes parallel to $\mathbf{m}_i$ that changes instantaneously. These axes form a plane $\mathcal{V}_i$ having $(\mathbf{m}_i \times \mathbf{f}_i)$ as normal vector.

### 3.2 Constraint analysis

Each limb $l_i = \underline{\mathsf{R}}^i \mathsf{U}_1^i \mathsf{U}_2^i$ $(i = 1, \ldots, 4)$ of the 4-$\underline{\mathsf{R}}$UU PM applies one constraint moment $M_i = (\mathbf{0};\ \mathbf{m}_i \times \mathbf{z})$ reciprocal to the twists associated with joints $\underline{\mathsf{R}}^i$, $\mathsf{U}_1^i$ and $\mathsf{U}_2^i$. Vectors $\mathbf{m}_i \times \mathbf{z}$ have a common orthogonal vector $\mathbf{z}$. Thus, in a non singular configuration, the four constraint wrenches $M_i$ form a 2-system $\mathtt{W}^c_{4RUU}$, namely, the constraint wrench system of the PM:

$$\mathtt{W}^c_{4RUU} = \text{span}(M_i) \quad ; \quad i = 1, \ldots, 4 \tag{2}$$

The legs of the 4-$\underline{\mathsf{R}}$UU PM can apply independently four constraint wrenches to limit only two DOF. Thus, it is an over-constrained SMG. Moreover, the moving platform cannot rotate about an axis of direction orthogonal to $\mathbf{z}$. It provides three independent translations and one rotation about an axis of fixed direction along $\mathbf{z}$. By locking the actuator of the $i$-th limb, an additional constraint appears, which is called the limb actuation wrench. It is a pure force $F_i = (\mathbf{f}_i; \mathbf{r}_{C_i} \times \mathbf{f}_i)$ where $\mathbf{f}_i$ is the unit vector of $(B_iC_i = \mathcal{P}_i \cap \mathcal{V}_i)$ and $\mathbf{r}_{C_i}$ is the position vector of point $C_i$. In a non-singular configuration, the actuation wrench system of the PM is a 4-system expressed as:

$$\mathtt{W}^a_{4RUU} = \text{span}(F_i) \quad ; \quad i = 1, \ldots, 4 \tag{3}$$

Based on the constraint analysis, the rows of $\mathbf{J}$ of the 4-$\underline{\mathsf{R}}$UU PM can be composed of four independent zero pitch wrenches within $\mathtt{W}^a_{4RUU}$ plus two independent infinite pitch wrenches within $\mathtt{W}^c_{4RUU}$. However, a parallel singularity occurs when the system spanned by the four actuation forces and the four constraint moments becomes a $(n < 6)$-system.

## 4 Limb Singularities

The superbracket of a PM only provides information about the parallel singularities. Thus, it does not consider limb singularities. A limb singularity is similar to the singularity of a serial manipulator. It occurs for the 4-$\underline{\mathsf{R}}$UU PM when a limb kinematic screw system degenerates. This happens for the $i$-th limb if the actuation force $F_i = (\mathbf{f}_i;\ \mathbf{r}_{C_i} \times \mathbf{f}_i)$ crosses the axis, $\mathsf{A}_i$, of the actuated joint (the first $\mathsf{R}$-joint of the limb). In such a case, the limb actuation force acts as a constraint force even without locking the limb actuator. Consequently, the platform loses one DOF. Referring to Fig. 1(a), this can occur upon two situations:

**1.1** $F_i = (\mathbf{f}_i;\ \mathbf{r}_{C_i} \times \mathbf{f}_i)$ crosses $\mathsf{A}_i$ at a finite point, namely, $C_i$. In that case, $A_iC_i \parallel \mathbf{z}$ as depicted in Fig. 2(a). As a result, the 4-$\underline{\mathsf{R}}$UU PM loses the translational DOF along $\mathbf{f}_i$;

**1.2** $F_i$ crosses $\mathsf{A}_i$ at infinity, namely, at point $\underline{\mathtt{j}} = (\mathbf{z};\ 0)$. In such a case, $\mathbf{f}_i \parallel \mathbf{z}$ as shown in Fig. 2(b). Consequently, the 4-$\underline{\mathsf{R}}$UU PM loses the translational DOF along $\mathbf{z}$.

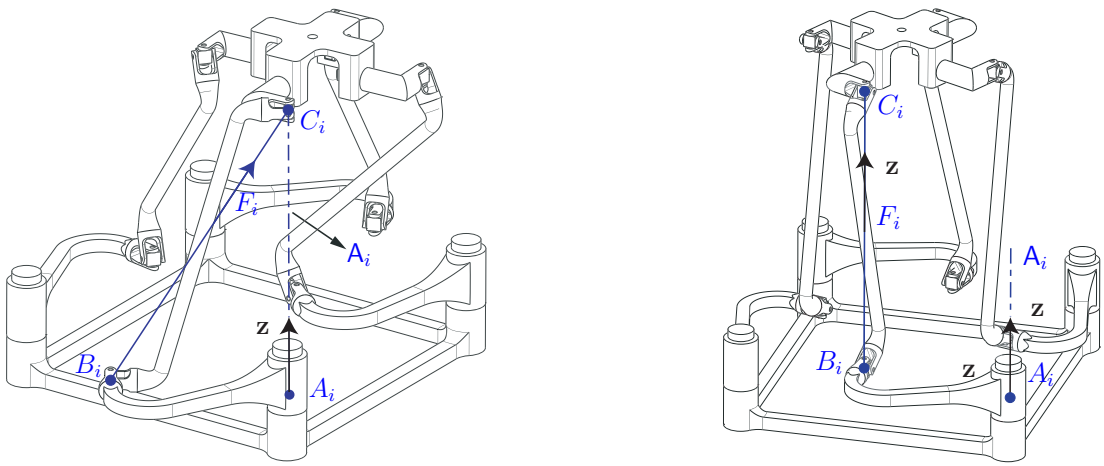


(a) A limb singularity, condition **1.1**.

(b) A limb singularity, condition **1.2**.

Figure 2: Limb singularities.

## 5 Singularity Analysis of the 4-RUU PM using GCA

In order to formulate a superbracket expression of the 4-RUU PM, one must represent its different wrenches in $\mathbb{P}_3$ and then select two points on each Plücker line of $\mathbf{J}$. A finite line (pure force) could be represented in the superbracket either by two finite points or by one finite point and its unique point at infinity. In turn, a line at infinity could be represented by two points at infinity. However, the selection of the foregoing points must highlight as much as possible geometric (coincidence, parallelism, orthogonality, intersection and so on) relations between the wrenches in order to obtain a simplified expression of the superbracket.

As shown in Fig. 1(a), each actuation force of the 4-RUU PM can be expressed as $F_i = (\mathcal{P}_i \cap \mathcal{V}_i)$, $i = 1, \ldots, 4$, plane $\mathcal{P}_i$ being of normal $(\mathbf{z} \times \mathbf{f}_i) = \mathbf{m}_i$ while plane $\mathcal{V}_i$ is of normal $\mathbf{m}_i \times \mathbf{f}_i$. On the other hand, in a general case, two planes $\mathcal{P}_i$ and $\mathcal{P}_j$ $(i \neq j)$ intersect at a finite line, namely, $\mathcal{T}_{ij} = (\mathcal{P}_i \cap \mathcal{P}_j)$. Such a line is orthogonal to both vectors $\mathbf{z} \times \mathbf{f}_i$ and $\mathbf{z} \times \mathbf{f}_j$ and is thus directed along $\mathbf{z}$. Therefore, for $i \neq j$, one can find a line $\mathcal{T}_{ij} = (\mathcal{P}_i \cap \mathcal{P}_j)$ directed along $\mathbf{z}$ and crossing the two actuation forces $F_i$ and $F_j$. In this vein, let $\mathtt{a}$ and $\mathtt{c}$ be the intersection points of $\mathcal{T}_{12}$ with $F_1$ and $F_2$, respectively. Likewise, let $\mathtt{e}$ and $\mathtt{g}$ be the intersection points of $\mathcal{T}_{34}$ with $F_3$ and $F_4$, respectively.

On the other hand, let $\underline{\mathtt{b}} = (\mathbf{f}_1; 0)$, $\underline{\mathtt{d}} = (\mathbf{f}_2; 0)$, $\underline{\mathtt{f}} = (\mathbf{f}_3; 0)$ and $\underline{\mathtt{h}} = (\mathbf{f}_4; 0)$. Accordingly, the four actuation forces can be expressed as:

$$F_1 = \mathtt{a}\underline{\mathtt{b}} \quad ; \quad F_2 = \mathtt{c}\underline{\mathtt{d}} \quad ; \quad F_3 = \mathtt{e}\underline{\mathtt{f}} \quad ; \quad F_4 = \mathtt{g}\underline{\mathtt{h}} \tag{4}$$

Now let $\underline{\mathtt{x}} = (\mathbf{x}; 0)$ and $\underline{\mathtt{y}} = (\mathbf{y}; 0)$. Hence, line $\underline{\mathtt{xy}}$ collects all points at infinity corresponding to directions orthogonal to $\mathbf{z}$. Let $\underline{\mathtt{j}} = (\mathbf{z}; 0)$, $\underline{\mathtt{i}} = (\mathbf{m}_1; 0)$, $\underline{\mathtt{k}} = (\mathbf{m}_2; 0)$, $\underline{\mathtt{l}} = (\mathbf{m}_3; 0)$ and $\underline{\mathtt{m}} = (\mathbf{m}_4; 0)$. Accordingly, the four constraint moments are expressed as:

$$M_1 = \underline{\mathtt{ij}} \quad ; \quad M_2 = \underline{\mathtt{kj}} \quad ; \quad M_3 = \underline{\mathtt{lj}} \quad ; \quad M_4 = \underline{\mathtt{mj}} \tag{5}$$

where $\underline{\mathtt{i}}$, $\underline{\mathtt{k}}$, $\underline{\mathtt{l}}$ and $\underline{\mathtt{m}}$ belong to $\underline{\mathtt{xy}}$. A wrench graph, representing the projective lines associated with the wrenches of the 4-$\underline{\mathsf{R}}$UU PM in $\mathbb{P}_3$, is given in Fig. 1(b).

### 5.1 Superbracket decomposition

Due to the redundancy of constraints, a superbracket of the 4-$\underline{\mathsf{R}}$UU PM can be composed of the four actuation forces $F_i$ ($i = 1, \ldots, 4$) in addition to two among the four constraint moments expressed in Eq. (5). Thus, one can write $\binom{4}{2} = \mathrm{C}_4^2 = 6$ superbrackets $S_j$ ($j = 1, \ldots, 6$). However, a parallel singularity occurs when the six possible superbrackets vanish simultaneously. For example, the superbracket $S_1$ involving the two constraint moments $\underline{\mathtt{ij}}$ and $\underline{\mathtt{kj}}$ takes the form:

$$S_1 = [\mathtt{a}\underline{\mathtt{b}},\ \mathtt{e}\underline{\mathtt{f}},\ \mathtt{c}\underline{\mathtt{d}},\ \underline{\mathtt{gh}},\ \underline{\mathtt{ij}},\ \underline{\mathtt{kj}}] \tag{6}$$

From Eq. (1), $S_1$ can be decomposed into a linear combination of 24 bracket monomials, which leads to only five non-zero monomials as follows:

$$\begin{aligned} S_1 = \ & - \ [\mathtt{a}\,\underline{\mathtt{b}}\,\mathtt{e}\,\underline{\mathtt{f}}][\mathtt{c}\,\underline{\mathtt{d}}\,\underline{\mathtt{h}}\,\underline{\mathtt{j}}][\underline{\mathtt{g}}\,\underline{\mathtt{i}}\,\underline{\mathtt{k}}\,\underline{\mathtt{j}}] - [\mathtt{a}\,\underline{\mathtt{b}}\,\mathtt{e}\,\underline{\mathtt{d}}][\underline{\mathtt{f}}\,\underline{\mathtt{g}}\,\underline{\mathtt{h}}\,\underline{\mathtt{j}}][\mathtt{c}\,\underline{\mathtt{i}}\,\underline{\mathtt{k}}\,\underline{\mathtt{j}}] + [\mathtt{a}\,\underline{\mathtt{b}}\,\mathtt{e}\,\underline{\mathtt{h}}][\underline{\mathtt{f}}\,\mathtt{c}\,\underline{\mathtt{d}}\,\underline{\mathtt{j}}][\underline{\mathtt{g}}\,\underline{\mathtt{i}}\,\underline{\mathtt{k}}\,\underline{\mathtt{j}}] \\ & - \ [\mathtt{a}\,\underline{\mathtt{b}}\,\underline{\mathtt{f}}\,\underline{\mathtt{h}}][\mathtt{e}\,\mathtt{c}\,\underline{\mathtt{d}}\,\underline{\mathtt{j}}][\underline{\mathtt{g}}\,\underline{\mathtt{i}}\,\underline{\mathtt{k}}\,\underline{\mathtt{j}}] + [\mathtt{a}\,\underline{\mathtt{b}}\,\underline{\mathtt{f}}\,\underline{\mathtt{d}}][\mathtt{e}\,\underline{\mathtt{g}}\,\underline{\mathtt{h}}\,\underline{\mathtt{j}}][\mathtt{c}\,\underline{\mathtt{i}}\,\underline{\mathtt{k}}\,\underline{\mathtt{j}}] \end{aligned} \tag{7}$$

The bracket of four projective points is defined as the determinant of the matrix whose columns are the homogeneous coordinates of these points. Accordingly, one has $[\mathtt{g}\,\underline{\mathtt{i}}\,\underline{\mathtt{k}}\,\underline{\mathtt{j}}] = [\mathtt{e}\,\underline{\mathtt{i}}\,\underline{\mathtt{k}}\,\underline{\mathtt{j}}] = [\underline{\mathtt{i}}\,\underline{\mathtt{k}}\,\underline{\mathtt{j}}]$. Furthermore, since points $\mathtt{e}$, $\mathtt{g}$ and $\underline{\mathtt{j}}$ belong to the same projective line, namely, to $\mathcal{T}_{34}$, the bracket $[\mathtt{e}\,\mathtt{g}\,\underline{\mathtt{h}}\,\underline{\mathtt{j}}]$ is null and therefore: $[\mathtt{a}\,\underline{\mathtt{b}}\,\underline{\mathtt{f}}\,\underline{\mathtt{d}}][\mathtt{e}\,\mathtt{g}\,\underline{\mathtt{h}}\,\underline{\mathtt{j}}][\mathtt{c}\,\underline{\mathtt{i}}\,\underline{\mathtt{k}}\,\underline{\mathtt{j}}] = 0$. Thus, Eq. (7) becomes:

$$S_1 = [\underline{\mathtt{i}}\,\underline{\mathtt{k}}\,\underline{\mathtt{j}}]\Big(-[\mathtt{a}\,\underline{\mathtt{b}}\,\mathtt{e}\,\underline{\mathtt{f}}][\mathtt{c}\,\underline{\mathtt{d}}\,\underline{\mathtt{h}}\,\underline{\mathtt{j}}] - [\mathtt{a}\,\underline{\mathtt{b}}\,\mathtt{e}\,\underline{\mathtt{d}}][\underline{\mathtt{f}}\,\underline{\mathtt{g}}\,\underline{\mathtt{h}}\,\underline{\mathtt{j}}] + [\mathtt{a}\,\underline{\mathtt{b}}\,\mathtt{e}\,\underline{\mathtt{h}}][\underline{\mathtt{f}}\,\mathtt{c}\,\underline{\mathtt{d}}\,\underline{\mathtt{j}}] - [\mathtt{a}\,\underline{\mathtt{b}}\,\underline{\mathtt{f}}\,\underline{\mathtt{h}}][\mathtt{e}\,\mathtt{c}\,\underline{\mathtt{d}}\,\underline{\mathtt{j}}]\Big) \tag{8}$$

From the determinant properties, we know that:

$$[\mathtt{a}\,\underline{\mathtt{b}}\,\mathtt{e}\,\mathtt{c}][\underline{\mathtt{f}}\,\underline{\mathtt{d}}\,\underline{\mathtt{h}}\,\underline{\mathtt{j}}] = +[\mathtt{a}\,\underline{\mathtt{b}}\,\mathtt{e}\,\underline{\mathtt{f}}][\mathtt{c}\,\underline{\mathtt{d}}\,\underline{\mathtt{h}}\,\underline{\mathtt{j}}] + [\mathtt{a}\,\underline{\mathtt{b}}\,\mathtt{e}\,\underline{\mathtt{d}}][\underline{\mathtt{f}}\,\mathtt{c}\,\underline{\mathtt{h}}\,\underline{\mathtt{j}}] + [\mathtt{a}\,\underline{\mathtt{b}}\,\mathtt{e}\,\underline{\mathtt{h}}][\underline{\mathtt{f}}\,\underline{\mathtt{d}}\,\mathtt{c}\,\underline{\mathtt{j}}] + [\mathtt{a}\,\underline{\mathtt{b}}\,\mathtt{e}\,\underline{\mathtt{j}}][\underline{\mathtt{f}}\,\underline{\mathtt{d}}\,\underline{\mathtt{h}}\,\mathtt{c}] \tag{9}$$

On the other hand, $[\underline{\mathtt{f}}\,\underline{\mathtt{d}}\,\underline{\mathtt{h}}\,\underline{\mathtt{j}}] = 0$. Moreover, $[\underline{\mathtt{f}}\,\underline{\mathtt{d}}\,\mathtt{c}\,\underline{\mathtt{j}}] = -[\underline{\mathtt{f}}\,\mathtt{c}\,\underline{\mathtt{d}}\,\underline{\mathtt{j}}]$. Therefore,

$$[\mathtt{a}\,\underline{\mathtt{b}}\,\mathtt{e}\,\underline{\mathtt{j}}][\underline{\mathtt{f}}\,\underline{\mathtt{d}}\,\underline{\mathtt{h}}\,\mathtt{c}] = -[\mathtt{a}\,\underline{\mathtt{b}}\,\mathtt{e}\,\underline{\mathtt{f}}][\mathtt{c}\,\underline{\mathtt{d}}\,\underline{\mathtt{h}}\,\underline{\mathtt{j}}] - [\mathtt{a}\,\underline{\mathtt{b}}\,\mathtt{e}\,\underline{\mathtt{d}}][\underline{\mathtt{f}}\,\mathtt{c}\,\underline{\mathtt{h}}\,\underline{\mathtt{j}}] + [\mathtt{a}\,\underline{\mathtt{b}}\,\mathtt{e}\,\underline{\mathtt{h}}][\underline{\mathtt{f}}\,\mathtt{c}\,\underline{\mathtt{d}}\,\underline{\mathtt{j}}] \tag{10}$$

As a result, Eq. (8) becomes:

$$S = \underbrace{[\underline{\mathtt{i}}\,\underline{\mathtt{k}}\,\underline{\mathtt{j}}]}_{A_1}\underbrace{\Big([\mathtt{a}\,\underline{\mathtt{b}}\,\mathtt{e}\,\underline{\mathtt{j}}][\underline{\mathtt{f}}\,\underline{\mathtt{d}}\,\underline{\mathtt{h}}\,\mathtt{c}] - [\mathtt{a}\,\underline{\mathtt{b}}\,\underline{\mathtt{f}}\,\underline{\mathtt{h}}][\mathtt{e}\,\mathtt{c}\,\underline{\mathtt{d}}\,\underline{\mathtt{j}}]\Big)}_{B} \tag{11}$$

Obviously, in Eq. (11), term $A_1 = [\mathtt{g}\,\underline{\mathtt{i}}\,\underline{\mathtt{k}}\,\underline{\mathtt{j}}]$ depends only on the chosen constraint moments $\underline{\mathtt{ij}}$ and $\underline{\mathtt{kj}}$ whereas term $B$ does not depend on the choice of points $\underline{\mathtt{i}}$ and $\underline{\mathtt{k}}$. Consequently, term $B$ is a common multiple of the six possible superbrackets:

$$S_j = A_j\, B \qquad ; \qquad j = 1, \ldots, 6 \tag{12}$$

where $A_1 = [\mathtt{g}\,\underline{\mathtt{i}}\,\underline{\mathtt{k}}\,\underline{\mathtt{j}}]$, $A_2 = [\mathtt{g}\,\underline{\mathtt{i}}\,\underline{\mathtt{l}}\,\underline{\mathtt{j}}]$, $A_3 = [\mathtt{g}\,\underline{\mathtt{i}}\,\underline{\mathtt{m}}\,\underline{\mathtt{j}}]$, $A_4 = [\mathtt{g}\,\underline{\mathtt{k}}\,\underline{\mathtt{l}}\,\underline{\mathtt{j}}]$, $A_5 = [\mathtt{g}\,\underline{\mathtt{k}}\,\underline{\mathtt{m}}\,\underline{\mathtt{j}}]$ and $A_6 = [\mathtt{g}\,\underline{\mathtt{l}}\,\underline{\mathtt{m}}\,\underline{\mathtt{j}}]$.

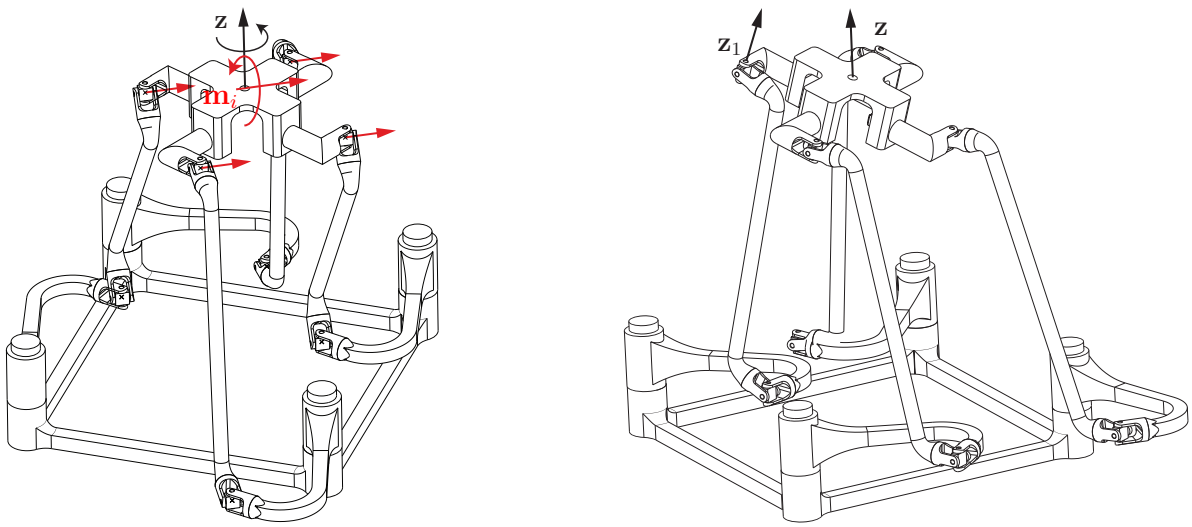


(a) A constraint singular configuration. (b) A coupled motion.

Figure 3: Two critical configurations of the 4-RUU PM.

## 5.2 Condition for constraint singularities

Constraint singularities correspond to the degeneracy of the constraint wrench system of the manipulator. In such configurations, the manipulator loses some constraints and, as a result, its moving platform gains one or several DOF. Accordingly, a constraint singularity of the 4-RUU PM occurs when the four constraint moments $M_i$ ($i = 1, \ldots, 4$) form a $n < 2$-system, i.e., when all terms $A_j$ ($j = 1, \ldots, 6$) expressed in Eq. (12) vanish simultaneously. Let us consider bracket $[\mathtt{g}\,\mathtt{i}\,\mathtt{k}\,\mathtt{j}]$, namely, term $A_1$. This bracket vanishes iff points $\mathtt{i}$, $\mathtt{k}$ and $\mathtt{j}$ belong to the same projective line. Since point $\mathtt{j}$ corresponds to a fixed direction along $\mathbf{z}$, it is a fixed point. Points $\mathtt{i}$ and $\mathtt{k}$ are associated with two directions orthogonal to $\mathbf{z}$ and, therefore, these points belong to a line that cannot pass through point $\mathtt{j}$ unless $\mathtt{i}$ and $\mathtt{k}$ are coincident. Consequently, all terms $A_j$ vanish simultaneously iff points $\mathtt{i}$, $\mathtt{k}$, $\mathtt{l}$, and $\mathtt{m}$ become all coincident. As a result, the 4-RUU PM reaches a constraint singularity iff:

$$\mathbf{m}_1 \parallel \mathbf{m}_2 \parallel \mathbf{m}_3 \parallel \mathbf{m}_4 \tag{13}$$

In such a configuration, the constraint wrench system of the manipulator degenerates into a 1-system and the moving platform gains one extra DOF, namely, the rotation about an axis directed along the common direction of $\mathbf{m}_i$ ($i = 1, \ldots, 4$), as shown in Fig. 3(a). In such a critical configuration, if the moving platform rotates about an axis directed along $\mathbf{z}$, then the robot will come back to a non-singular configuration.

On the other hand, in a constraint singular configuration, if the moving platform rotates about an axis directed along $\mathbf{m}_i$, the revolute joints attached to the moving platform will no longer be directed along $\mathbf{z}$. As a consequence, the constraint wrench of each limb becomes a wrench of finite pitch (a combination of a force and a moment). In that case, the moving platform has neither pure constraint moments nor pure constraint forces. Moreover, the limbs constrain neither a pure rotation nor a pure translation. Such a configuration is shown in Fig. 3(b) and corresponds to

Table 1: Actuation singularity conditions of the 4-$\underline{\mathsf{R}}$UU PM.

| Case | Vector form | Algebraic form |
|---|---|---|
| **(a)** | $\mathbf{f}_3 \parallel \mathbf{f}_4$ | $\underline{\mathtt{f}} \equiv \underline{\mathtt{h}}$ |
| **(b)** | $\mathbf{u} \parallel \mathbf{z}$ | $\mathtt{e}$, $\mathtt{c}$ and $\underline{\mathtt{j}}$ are aligned |
| **(c)** | $\mathbf{f}_2 \parallel \mathbf{f}_1$ | $\underline{\mathtt{d}} \equiv \underline{\mathtt{b}}$ |
| **(d)** | $(\mathbf{f}_3 \times \mathbf{f}_4) \parallel (\mathbf{u} \times \mathbf{z})$ | $\underline{\mathtt{f}}\,\underline{\mathtt{h}} \equiv \underline{\mathtt{u}}\,\underline{\mathtt{j}}$ |
| **(e)** | $(\mathbf{f}_2 \times \mathbf{f}_1) \parallel (\mathbf{u} \times \mathbf{z})$ | $\underline{\mathtt{d}}\,\underline{\mathtt{b}} \equiv \underline{\mathtt{u}}\,\underline{\mathtt{j}}$ |
| **(f)** | $(\mathbf{f}_3 \times \mathbf{f}_4) \parallel (\mathbf{f}_2 \times \mathbf{f}_1)$ | $\underline{\mathtt{f}}\,\underline{\mathtt{h}} \equiv \underline{\mathtt{d}}\,\underline{\mathtt{b}}$ |
| **(g)** | $(\mathbf{f}_3 \times \mathbf{f}_4) \parallel (\mathbf{u} \times \mathbf{z}) \parallel (\mathbf{f}_2 \times \mathbf{f}_1)$ | $\underline{\mathtt{f}}\,\underline{\mathtt{h}} \equiv \underline{\mathtt{u}}\,\underline{\mathtt{j}} \equiv \underline{\mathtt{d}}\,\underline{\mathtt{b}}$ |
| **(h)** | $\Big((\mathbf{f}_3 \times \mathbf{f}_4) \times (\mathbf{u} \times \mathbf{z})\Big) \perp (\mathbf{f}_2 \times \mathbf{f}_1)$ | $(\underline{\mathtt{f}}\,\underline{\mathtt{h}} \wedge \underline{\mathtt{u}}\,\underline{\mathtt{j}}) \in \underline{\mathtt{d}}\,\underline{\mathtt{b}}$ |

a *coupled motion*.

### 5.3 Conditions for actuation singularities

In this paper, the actuation singularities correspond to configurations in which $\mathbf{J}$ is rank deficient while the constraint wrench system does not degenerate. In such configurations, the motion of the moving platform becomes uncontrollable, namely, the actuators cannot control the motion of the moving platform. According to Eq. (12), these singularities are related to the vanishing conditions of term $B$. In order to obtain geometric and vector conditions for actuation singularities, term $B$ is expressed in a more compact form by considering the following bracket simplifications:

- $[\underline{\mathtt{f}}\,\underline{\mathtt{d}}\,\underline{\mathtt{h}}\,\mathtt{c}] = [\mathtt{c}\,\underline{\mathtt{d}}\,\underline{\mathtt{f}}\,\underline{\mathtt{h}}] = [\mathtt{a}\,\underline{\mathtt{d}}\,\underline{\mathtt{f}}\,\underline{\mathtt{h}}]$;
- Since $\underline{\mathtt{j}} = \mathtt{c} - \mathtt{a}$, $[\mathtt{a}\,\underline{\mathtt{b}}\,\mathtt{e}\,\underline{\mathtt{j}}] = [(\mathtt{c} - \underline{\mathtt{j}})\,\underline{\mathtt{b}}\,\mathtt{e}\,\underline{\mathtt{j}}] = [\mathtt{c}\,\underline{\mathtt{b}}\,\mathtt{e}\,\underline{\mathtt{j}}] = [\mathtt{e}\,\mathtt{c}\,\underline{\mathtt{b}}\,\underline{\mathtt{j}}]$.

Accordingly,

$$B = [\mathtt{a}\,\underline{\mathtt{d}}\,\underline{\mathtt{f}}\,\underline{\mathtt{h}}][\mathtt{e}\,\mathtt{c}\,\underline{\mathtt{b}}\,\underline{\mathtt{j}}] - [\mathtt{a}\,\underline{\mathtt{b}}\,\underline{\mathtt{f}}\,\underline{\mathtt{h}}][\mathtt{e}\,\mathtt{c}\,\underline{\mathtt{d}}\,\underline{\mathtt{j}}] = [\mathtt{a}\,\dot{\underline{\mathtt{d}}}\,\underline{\mathtt{f}}\,\underline{\mathtt{h}}][\mathtt{e}\,\mathtt{c}\,\dot{\underline{\mathtt{b}}}\,\underline{\mathtt{j}}] = (\mathtt{a}\,\underline{\mathtt{f}}\,\underline{\mathtt{h}}) \wedge (\mathtt{e}\,\mathtt{c}\,\underline{\mathtt{j}}) \wedge (\underline{\mathtt{d}}\,\underline{\mathtt{b}}) \tag{14}$$

where the dotted letters stand for the permuted elements as explained in [14, 20]. An actuation singularity occurs iff term $B$ of Eq. (14) vanishes, namely, if the projective line $(\underline{\mathtt{db}})$ crosses the intersection line of planes $(\mathtt{a}\,\underline{\mathtt{f}}\,\underline{\mathtt{h}})$ and $(\mathtt{e}\,\mathtt{c}\,\underline{\mathtt{j}})$. It amounts to the following vector form:

$$\Big((\mathbf{f}_3 \times \mathbf{f}_4) \times (\mathbf{u} \times \mathbf{z})\Big) \bullet (\mathbf{f}_2 \times \mathbf{f}_1) = 0 \tag{15}$$

From Eqs. (14) and (15), an actuation singularity of the 4-$\underline{\mathsf{R}}$UU PM occurs upon each of the following cases:

**(a)** Plane $(\mathtt{a}\,\underline{\mathtt{f}}\,\underline{\mathtt{h}})$ degenerates, which happens iff $\underline{\mathtt{f}} \equiv \underline{\mathtt{h}} \Leftrightarrow \mathbf{f}_3 \parallel \mathbf{f}_4$, i.e., the two actuation forces $F_3$ and $F_4$ are parallel;

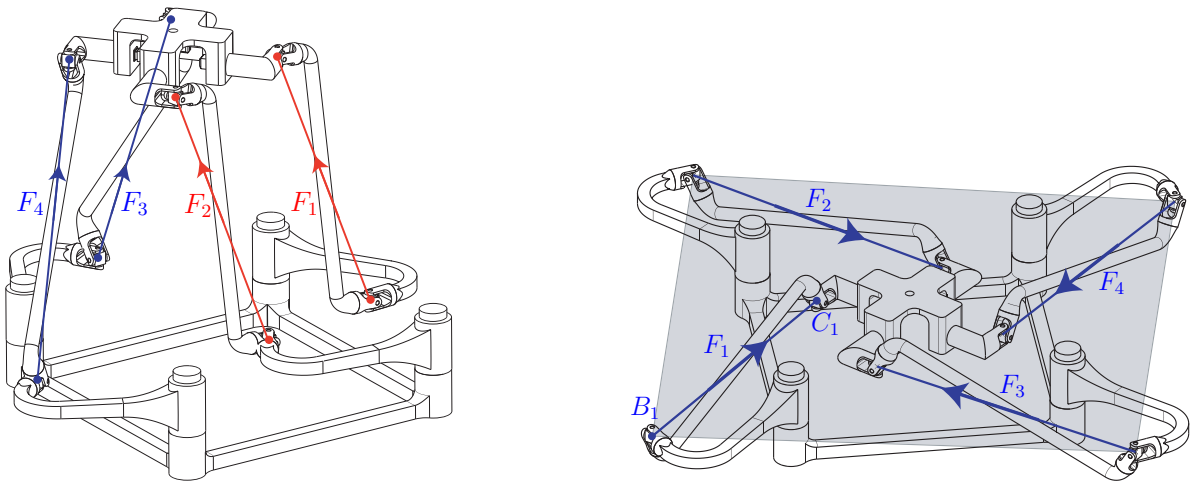


(a) $F_1$ and $F_2$ are parallel.

(b) All actuation forces are coplanar.

Figure 4: Two actuation singular configurations of the 4-RUU PM.

**(b)** Plane (e c j) degenerates, which happens iff points e, c and j are aligned. In that case, $\mathbf{u} \parallel \mathbf{z}$, i.e., $\mathcal{T}_{12} \equiv \mathcal{T}_{34}$;

**(c)** Line (d b) degenerates, which happens iff d $\equiv$ b, i.e., iff $F_1 \parallel F_2$ as shown in Fig. 4(a);

**(d)** Plane (a f h) coincides with plane (e c j). Since point a lies in plane (e c j), the condition (a f h) $\equiv$ (e c j) amounts to (f h) $\equiv$ (u j). In that case, $(\mathbf{f}_3 \times \mathbf{f}_4) \parallel (\mathbf{u} \times \mathbf{z})$, i.e., $\mathbf{f}_3$, $\mathbf{f}_4$, $\mathbf{u}$ and $\mathbf{z}$ are orthogonal to a given direction;

**(e)** Line (d b) lies in plane (a f h). In such a case, $(\mathbf{f}_2 \times \mathbf{f}_1) \parallel (\mathbf{f}_3 \times \mathbf{f}_4)$. For example, if the four actuation forces are coplanar, as shown in Fig. 4(b);

**(f)** Line (d b) lies in plane (e c j). In such a case, $(\mathbf{f}_2 \times \mathbf{f}_1) \parallel (\mathbf{u} \times \mathbf{z})$;

**(g)** The intersection line of planes (a f h) and (e c j) coincides with line (d b). Since planes (a f h) and (e c j) contain point a, they intersect at a line at infinity iff they coincide. Accordingly, condition **(g)** amounts to (f h) $\equiv$ (u j) $\equiv$ (d b), i.e., $(\mathbf{f}_3 \times \mathbf{f}_4) \parallel (\mathbf{u} \times \mathbf{z}) \parallel (\mathbf{f}_2 \times \mathbf{f}_1)$;

**(h)** Let us consider the general case of Eq. (15), namely, the intersection line of planes (a f h) and (e c j) crosses line (d b). If planes (a f h) and (e c j) are not coincident (condition(**d**)), then they will intersect at a finite line $\mathcal{D}$ directed along $\mathbf{n} = (\mathbf{f}_3 \times \mathbf{f}_4) \times (\mathbf{u} \times \mathbf{z})$. Thus, the point at infinity, $\mathrm{n} = (\mathbf{n}; 0)$, of line $\mathcal{D}$ is the intersection point of lines (f h) and (u j). The finite line $\mathcal{D}$ crosses line (d b) iff $\mathrm{n} \in$ (d b). In that case, the lines at infinity (f h), (d b) and (u j) intersect at point n. As a result, $\mathbf{n}$ is orthogonal to $(\mathbf{f}_2 \times \mathbf{f}_1)$, $(\mathbf{f}_3 \times \mathbf{f}_4)$ and $(\mathbf{u} \times \mathbf{z})$.

All possible cases of Eq. (15) are expanded in Table 1. It should be noted that Eq. (15) is obtained by considering two lines $\mathcal{T}_{12}$ (crossing $F_1$ and $F_2$) and $\mathcal{T}_{34}$ (crossing $F_3$ and $F_4$). Vector $\mathbf{u}$ in Eq. (15) could be written as $\mathbf{u}_{12}^{34}$, i.e., the unit vector of a line non-parallel to $\mathbf{z}$ and crossing lines

$\mathcal{T}_{12}$ and $\mathcal{T}_{34}$. Accordingly, since a line $\mathcal{T}_{ij}$ exists between each pair of forces $F_i$ and $F_j$, the vector form of actuation singularities can be generalized as follows:

$$\Big((\mathbf{f}_i \times \mathbf{f}_j) \times (\mathbf{f}_k \times \mathbf{f}_l)\Big) \bullet (\mathbf{u}_{ij}^{kl} \times \mathbf{z}) = 0 \tag{16}$$

where $(i,\, j,\, k,\, l) \in (1,\, 2,\, 3,\, 4)^4$, $i \neq j \neq k \neq l$ and $\mathbf{u}_{ij}^{kl}$ is the unit vector of a line crossing $\mathcal{T}_{ij}$ and $\mathcal{T}_{kl}$.

## 6 Conclusion

In this paper, the singularity conditions of 3T1R Parallel Manipulators (PMs) with identical limb structures were investigated through the singularity analysis of the $4$-$\underline{\mathsf{R}}$UU PM based on Grassmann-Cayley Algebra (GCA). First, the Jacobian matrix **J** of the PM was derived using screw theory. Then, a wrench graph that represents the wrenches of the $4$-$\underline{\mathsf{R}}$UU PM, namely, the rows of **J** in the $3$-dimensional projective space, was obtained. Accordingly, a superbracket was formulated and explored to provide a compact vector expression for the singularity locus, which is difficult to assess using classical linear algebra tools. Finally, all the geometric singularity conditions of the $4$-$\underline{\mathsf{R}}$UU PM were enumerated and some singular configurations were illustrated.


### Acknowledgments

The authors would like to acknowledge the financial support of the Natural Sciences and Engineering Research Council of Canada (NSERC), the Canada Research Chair program and the French "Agence Nationale de la Recherche" (Project "SiRoPa", SIngularités des RObots PArallèles). Finally, the authors would like to thank Pierre-Luc Richard and Thierry Laliberté for the preparation of the solid models of the $4$-$\underline{\mathsf{R}}$UU parallel mechanism.


## References


[1] J.P. Merlet. Singular Configurations of Parallel Manipulators and Grassmann Geometry. *The International Journal of Robotics Research*, 8(5):45–56, 1989.

[2] P. Ben-Horin and M. Shoham. Singularity Analysis of a Class of Parallel Robots Based on Grassmann–Cayley Algebra. *Mechanism and Machine Theory*, 41(8):958–970, 2006.

[3] C. Gosselin and J. Angeles. Singularity Analysis of Closed-Loop Kinematic Chains. *IEEE Transactions on Robotics and Automation*, 6(3):281–290, 1990.

[4] Y. Fang and L.W. Tsai. Structure Synthesis of a Class of 4-DoF and 5-DoF Parallel Manipulators with Identical Limb Structures. *The International Journal of Robotics Research*, 21(9):799–810, 2002.

[5] M. Conconi and M. Carricato. A New Assessment of Singularities of Parallel Kinematic Chains. In *Advances in Robot Kinematics: Analysis and Design*, pages 3–12, 2008.

[6] D. Zlatanov, R.G. Fenton, and B. Benhabib. Singularity Analysis of Mechanisms and Robots Via a Velocity-Equation Model of the Instantaneous Kinematics. In *IEEE International Conference on Robotics and Automation*, pages 986–991, San Diego, CA, 1994.

[7] S.A. Joshi and L.W. Tsai. Jacobian Analysis of Limited-DOF Parallel Manipulators. *ASME Journal of Mechanical Design*, 124(2):254–258, June 2002.

[8] D. Zlatanov, I. Bonev, and C.M. Gosselin. Constraint Singularities of Parallel Mechanisms. In *IEEE International Conference on Robotics and Automation*, pages 496–502, Washington, DC, May 11-15 2002.

[9] R.S. Ball. *A Treatise On the Theory of Screws*. Cambridge University Press, Cambridge, CA, 1900.

[10] K.J. Waldron. *The Mobility of Linkages*. PhD Thesis, Stanford University, Cambridge, CA, 1969.

[11] K.H. Hunt. *Kinematic Geometry of Mechanisms*. Clarendon Press, Oxford, 1978.

[12] X. Kong and C. Gosselin. *Type Synthesis of Parallel Mechanisms*, volume 33. Springer, Heidelberg, 2007.

[13] S. Amine, D. Kanaan, S. Caro, and P. Wenger. Constraint and Singularity Analysis of Lower-Mobility Parallel Manipulators with Parallelogram Joints. In *ASME 2010 International Design Engineering Technical Conferences*, number 28483 in DETC2010, Montreal, Quebec, Canada, August 15-18 2010.

[14] P. Ben-Horin and M. Shoham. Application of Grassmann–Cayley Algebra to Geometrical Interpretation of Parallel Robot Singularities. *The International Journal of Robotics Research*, 28(1):127–141, 2009.

[15] D. Kanaan, P. Wenger, S. Caro, and D. Chablat. Singularity Analysis of Lower-Mobility Parallel Manipulators using Grassmann–Cayley Algebra. *IEEE Transactions on Robotics*, 25:995–1004, 2009.

[16] J.P. Merlet. *Parallel Robots*, volume 128 of *Solid Mechanics and Its Applications*. Springer, 2006.

[17] T. Mbarek, G. Lonij, and B. Corves. Singularity Analysis of a Fully Parallel Manipulator with Five-Degrees-of-Freedom Based on Grassmann Line Geometry. In *12th IFToMM World Congress*, BesanAgon, France, June 18-21 2007.

[18] M. Tale-Masouleh and C. Gosselin. Singularity Analysis of 5-RPRRR Parallel Mechanisms via Grassmann Line Geometry. In *Proceedings of the 2009 ASME Design Engineering Technical Conferences*, number 86261 in DETC2009, 2009.

[19] S. Caro, W.A. Khan, D. Pasini, and J. Angeles. The Rule-based Conceptual Design of the Architecture of Serial Schönflies-motion Generators. *Mechanism and Machine Theory*, 45(2):251–260, 2010.

[20] N.L. White. *Grassmann-Cayley Algebra and Robotics Applications*, volume VIII. Handbook of Geometric Computing, 2005.

[21] T. McMillan. *Invariants of Antisymmetric Tensors*. PhD Thesis, University of Florida, 1990.