HAL
open science

# Tunnel diode oscillator-based measurement of quantum oscillations amplitude in pulsed high magnetic fields: a quantitative field-dependent study

Loïc Drigo, F. Durantel, A. Audouard, Géraldine Ballon

## To cite this version:

Loïc Drigo, F. Durantel, A. Audouard, Géraldine Ballon. Tunnel diode oscillator-based measurement of quantum oscillations amplitude in pulsed high magnetic fields: a quantitative field-dependent study. European Physical Journal: Applied Physics, 2010, 52 (1), pp.10401. 10.1051/epjap/2010127 . hal-00624424

**HAL Id: hal-00624424**

**https://hal.science/hal-00624424v1**

Submitted on 17 Sep 2011

**HAL** is a multi-disciplinary open access archive for the deposit and dissemination of scientific research documents, whether they are published or not. The documents may come from teaching and research institutions in France or abroad, or from public or private research centers.

L'archive ouverte pluridisciplinaire **HAL**, est destinée au dépôt et à la diffusion de documents scientifiques de niveau recherche, publiés ou non, émanant des établissements d'enseignement et de recherche français ou étrangers, des laboratoires publics ou privés.

**EPJ manuscript No.**
(will be inserted by the editor)

# Tunnel diode oscillator-based measurement of quantum oscillations amplitude in pulsed magnetic fields: a quantitative field-dependent study

Loïc Drigo [a], Florent Durantel[b], Alain Audouard [c], and Géraldine Ballon

Laboratoire National des Champs Magnétiques Intenses (UPR 3228 CNRS, INSA, UJF, UPS) 143 avenue de Rangueil, F-31400 Toulouse, France.

Received: June 30, 2010/ Revised version: date

**Abstract.** Tunnel diode oscillator-based technique has been used for quantum oscillations spectra determination of a quasi-two dimensional organic metal in pulsed high magnetic fields of up to 55 teslas. It is demonstrated that reliable field-dependent quantitative data can be obtained in the case of complex oscillatory spectra provided adequate data processing is conducted.

## 1 Introduction

Radio frequency measurement technique based on tunnel diode oscillator (TDO) is very useful for the investigation of transport properties of metals for which samples have small resistance or (and) in the case where good contact-resistance are difficult to achieve. This technique has been successfully used for the study of Shubnikov-de Haas (SdH) oscillations in metals submitted to pulsed magnetic fields for many years. As examples, it allowed the observation of four Fourier components, including frequency combinations, in the oscillations spectrum of the quasi-two dimensional organic metal $\kappa$-(BEDT-TTF)$_2$Cu(NCS)$_2$ (where BEDT-TTF stands for bis-ethylenedithia-tetrathiofulvalene) [1]. More recently, effective mass determinations deduced from thermal damping of the oscillations amplitude, have been reported in heavy fermions systems [2] and high-Tc superconductors [3,4].

Magnetic field-dependent behaviour of SdH oscillations involves important physical parameters such as the magnetic breakdown (MB) field and scattering rate. For example, the scattering rate is a key parameter for the widely discussed problem of phase coherence between adjacent

[a] *Electronic address:* loic.drigo@lncmi.cnrs.fr

[b] *Present address:* CIMAP, CEA CNRS ENSICAEN BP 5133 F-14040 Caen, France.

[c] *Electronic address:* alain.audouard@lncmi.cnrs.fr

conducting layers in quasi two-dimensional metals [5] while the MB field is an essential ingredient for a clear understanding of the oscillatory behaviour of multiband metals [6,7]. These parameters can be reliably determined from the field-dependent quantum oscillations amplitude provided oscillations are detected in a large enough field range. In the present paper, which focuses on this problematic, it is demonstrated that TDO-based technique allows for the determination of reliable field-dependent quantitative data down to magnetic fields as low as few teslas, even in the case of complex oscillatory spectra measured in pulsed high magnetic fields. As developed below, specific data processing is required to that purpose.

We have considered the organic metal (BEDT-TTF)$_8$ $Hg_4Cl_{12}(C_6H_5Br)_2$ whose SdH oscillations spectrum has been widely studied in the past [8–11]. Indeed, this compound can be regarded as a model system for the study of quantum oscillations in compensated multiband systems that achieve two-dimensional networks of orbits coupled by magnetic breakdown. The observed spectra are composed of numerous Fourier components that are linear combinations of the frequencies linked to the basic orbits labelled $a$ in Fig. 1 and to the $\Delta$ and $\delta$ pieces of the Fermi surface. In addition to MB orbits (such as $2a+\delta$) that are accounted for by the coupled network model [12] and quantum interference [13] (in particular, the $b$ oscillations), other frequency combinations due to chemical potential oscillations [6] and (or) the formation of Landau bands (instead of discrete levels) [7] are observed.

## 2 Experimental details and data processing

The device is a LC-tank circuit powered by a tunnel diode biased in the negative resistance region of the current-voltage characteristic (see Fig. 2), as reported in Refs. [1, 14–16]. Briefly, a 22 pF mica chip capacitor connected by a semi rigid 50 $\Omega$ coaxial cable to a pair of counter-wound coils is used. Coils are made with copper wire (100 $\mu$m in diameter) wound around a kapton tube with a diameter of 1.3 mm. Resulting inductance is L $\sim$ 1-2 $\mu$H. After signal amplification, mixing with a reference signal and demodulation, the resulting oscillator frequency, which can be approximated as f $= 1/2\pi\sqrt{LC}$, lies in the MHz range. The skin depth of a metallic sample placed in one of the coils is given by $\delta = \sqrt{\rho/\pi\mu_0 f}$, where $\rho$ is the sample resistivity and $\mu_0$ is the permittivity of free space. Therefore, resistivity variation leads, at first order, through skin depth variation ($\Delta\delta$), to coil inductance change $\delta L/L \simeq 2r_s\Delta\delta/R^2$, where $r_s$ and R are the sample mean diameter and the coil diameter, respectively. The resulting variation of the oscillator frequency can be regarded, still at first order, as proportional to resistivity variations.

Since SdH oscillations are periodic in 1/B, their period in a given field range can be written $\Delta B \simeq B^2/F$ where F is the oscillations frequency and B the mean magnetic field. One oscillation period is covered during a time interval $\Delta t$ which depends on the time derivative (dB/dt) of the pulsed field and can be approximated as:

$$\Delta t \simeq B^2/F|dB/dt|. \quad (1)$$

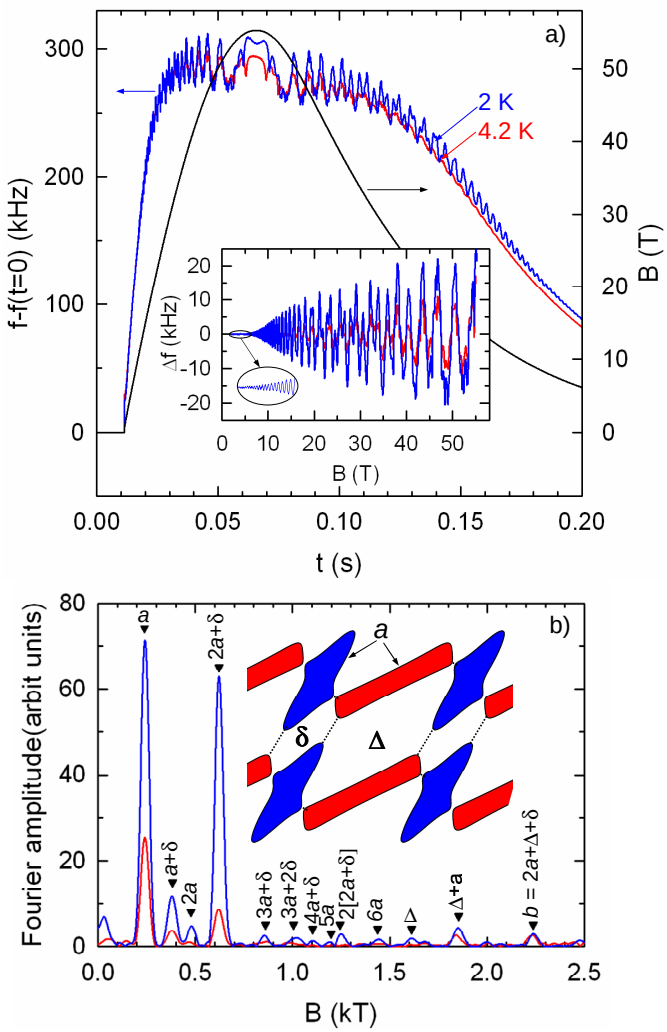


**Fig. 1.** (a) Time dependence of the TDO frequency, for magnetic field perpendicular to the conducting plane, at 2 K and 4.2 K and of the pulsed field related to data at 2 K. The inset displays the corresponding magnetic field dependence of the TDO frequency during the decreasing part of the pulsed field, after subtraction of a smooth background. (b) Fourier analysis of the data in the magnetic field range 15 - 55.3 T. Marks are calculated with $F_\delta$ = 138 T, $F_a$ = 240 T and $F_\Delta$ = 1601 T. The Fermi surface [11] making explicit the labels $a$, $\delta$ and $\Delta$ is displayed in the inset. Dotted lines mark the magnetic breakdown gaps delimiting the $\delta$ and $\Delta$ pieces located in-between the compensated $a$ orbits.

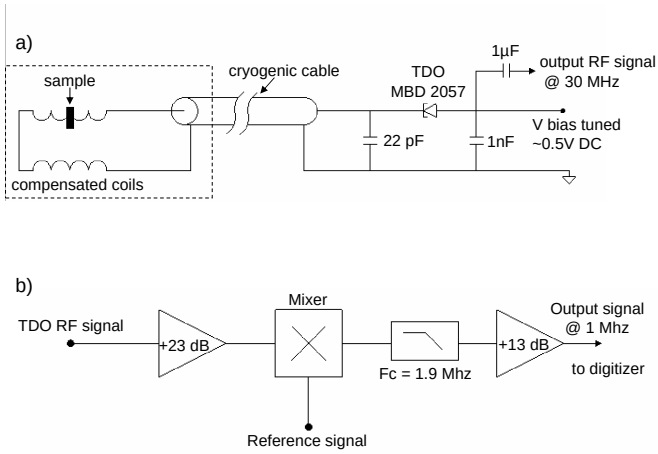


**Fig. 2.** Schematic representation of (a) tunnel diode oscillator (TDO) circuit and (b) demodulation system. Parts inside the rectangle in dotted lines are at liquid helium temperatures.

An analytical approximation of the field dependence of $\Delta$t can be derived taking into account that the decreasing part of the pulsed field, which is on interest for the measurements, can be approximated by an exponential decay [B(t) = $B_{max}$exp(-t/$t_0$), where $t_0$ = 52 ms in the present case] with an accuracy better than 1 % in the range 2 to 20 T in the case of the pulse of Fig. 1 (as discussed below, this field range is relevant for the following discussion). This leads to:

$$\Delta t \simeq Bt_0/F. \quad (2)$$

As a consequence, despite |dB/dt| is an increasing function of the magnetic field in the considered range, the SdH oscillations period decreases linearly as the magnetic field decreases which can hamper reliable determination of the oscillations amplitude at low field.

The time evolution of the TDO frequency ($f$) is deduced from successive short-term fast Fourier transforms

(FFT) of the raw signal. Zero padding, which consists of appending zeroes to the time interval considered for the FFT, can be included to improve resolution, as discussed below. Since the only quantity of interest is the fundamental frequency $f$, not any windowing is used in order to reduce the FFT peak width and to save processing time. Each FFT is calculated over a time interval $\delta$t which must be much lower than $\Delta$t. As developed in the next section, a violation of this requirement may lead to important errors in the determination of physical parameters such as the scattering rate and lead to inconsistencies between the various Fourier components observed in Fig. 1 which is obtained with $\delta$t = 40 $\mu$s.

As for organic metals, it should be kept in mind that, owing to the small magnetic susceptibility of these compounds, the observed behaviour is mostly dominated by SdH oscillations rather than de Haas-van Alphen (dHvA) effect [1,16]. Furthermore, since the studied compound is strongly 2D, as it is the case of most of the BEDT-TTF-based organic metals, the oscillator frequency variation is dominated by the in-plane resistivity [16]. This is at variance with four-point measurements of Refs. [8–11] where interlayer resistance is considered. However, it must be kept in mind that, even in the case of interlayer measurements, quantum oscillations behaviour is only related to the in-plane electron transport which involves in particular effective mass, MB field and scattering time.

The studied crystal was synthesized by electrocrystallization technique as reported in Ref. [17]. It is an irregular shaped platelet with approximate cross section (1 × 0.6 × 0.02) mm$^3$, the largest face being parallel to the conducting $bc$-plane. Pulsed magnetic fields of up to 55.3 T with a decay duration of 0.32 s were applied perpendicular to the conducting plane. Discrete Fourier analysis of the SdH oscillations data were performed using Blackman-type window. This windowing leads to relatively large Fourier peaks but avoid secondary lobes, the presence of which could be misleading in the case of complex oscillatory spectra.

## 3 Results and discussion

Magnetic field dependence of the TDO frequency is calculated after suppression of a smoothly varying background (see the inset of Fig. 1(a)). Corresponding Fourier analysis are displayed in Fig. 1(b). As it is the case of interlayer magnetoresistance oscillations, numerous Fourier components are observed. They are linear combinations of the frequencies linked to the compensated orbits $a$ ($F_a$ = 240 T) and of the Fermi surface pieces $\Delta$ ($F_\Delta$ = 1601 T) and $\delta$ ($F_\delta$ = 138 T) located in-between. These frequency combinations have been extensively discussed in Refs. [9–11], with which a good agreement is observed.

In the following we concentrate on the components $F_a$, which is the SdH frequency linked to the closed orbits $a$, and $F_b = 2F_a+F_\Delta+F_\delta$ which corresponds to a quantum interferometer with an area equal to that of the first Brillouin zone. The former component has the highest amplitude and can be observed down to low field while the second one is detected in the high field range, only.

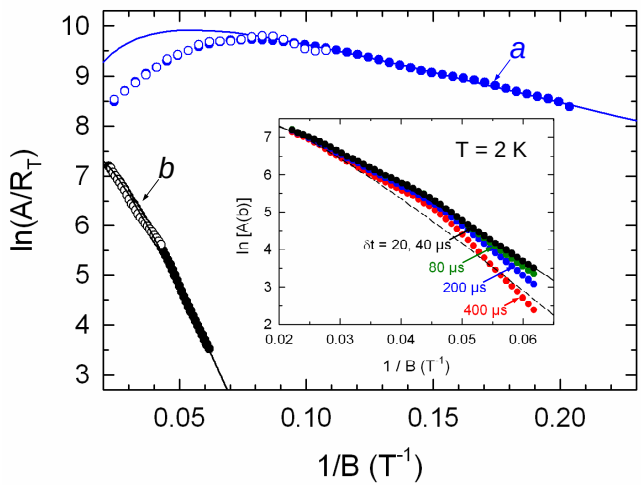


**Fig. 3.** Dingle plots for the $a$ and $b$ Fourier components at 2 K and 4.2 K (full and empty symbols, respectively) obtained with $\delta$t = 40 $\mu$s. The inset displays Dingle plots of the data related to $b$ oscillations, for various $\delta$t values. Solid lines are the best fits of Eqs. 4-5 with a MB field $B_{MB}$ = 31 T and a Dingle temperature $T_D$ = 0.7 K for both components. The thermal damping factor ($R_T$, see Eq. 3) is calculated with $m_a^*$ = 1.23 for closed orbits $a$. A zero effective mass is assumed for the quantum interferometer $b$ ($R_T$ = 1), consistently with the observed temperature-independent amplitude. Dashed line in the insert is the best fit of of Eqs. 4-5 for $\delta$t = 400 $\mu$s, obtained with $T_D$ = 1.3 K.

According to Refs. [9–11], the Lifshits-Kosevich formalism accounts for the SdH oscillations deduced from interlayer magnetoresistance data, at least in the low field range. Within this framework, the amplitude of the Fourier component with frequency $F_j$ is given by $A_j(B) \propto R_{Tj} R_{Dj} R_{MBj} R_{Sj}$ where the spin damping factor ($R_{Sj}$), only depends on the field direction. The thermal (for a two-dimensional FS), Dingle and MB damping factors are respectively given by [18]:

$$R_{Tj} = \frac{\alpha T m_j^*}{B sinh[\alpha T m_j^*/B]} \quad (3)$$

$$R_{Dj} = exp[-\alpha T_D m_j^*/B] \quad (4)$$

$$R_{MBj} = exp(-\frac{t_j B_{MB}}{2B})[1 - exp(-\frac{B_{MB}}{B})]^{b_j/2} \quad (5)$$

where $\alpha = 2\pi^2 m_e k_B/e\hbar$ ($\simeq$ 14.69 T/K), $m_j^*$ is the effective mass normalized to the free electron mass $m_e$, $T_D$ is the Dingle temperature ($T_D = \hbar/2k_B\tau$ where $\tau$ is the scattering time) and $B_{MB}$ is the MB field. Integers $t_j$ and $b_j$ are respectively the number of tunnellings and Bragg reflections involved in the MB orbit.

Recall first the main results relevant to the $a$ and $b$ components. The reported values of the effective mass linked to the $a$ orbits are $m_a^*$ = 1.15 ± 0.13 [9] and $m_a^*$ = 1.23 ± 0.12 [10]. The $b$ component amplitude is temperature independent ($m_b^*$ = 0) which is in line with a symmetric quantum interference path [9,11], as expected from Fermi surface topology of Fig. 1. Contrary to dHvA data [10], the field dependence of the SdH oscillations amplitude linked to $a$ orbits exhibits discrepancy with the LK formalism at high field which hamper reliable determination of the MB field (since MB phenomenon becomes important in the high field range). Oppositely, dHvA data for $a$ and SdH data for $b$ allow to determine values of $B_{MB}$, although with a large uncertainty, in the range 25 $\sim$ 45 T. Finally, small Dingle temperatures ($T_D$ below 1 K) are consistently deduced from the field dependence of the $a$ oscillations at low field and of the $b$ oscillations in the whole field range covered by the experiments. Regarding this latter component, it must be kept in mind that the

effective mass entering Eq. 4 for a quantum interferometer is the sum of the partial effective masses of each of its arms, namely $m'_b = 2m^*_a$ [9] (instead of $m^*_b = 0$ which holds for Eq. 3) .

Coming back to the TDO data, we first examine the influence of the time interval $\delta$t over which FFT's of the raw signal are performed for the determination of the oscillator frequency. The parameter of interest is the value of the time interval $\Delta$t (see Eqs. 1 and 2) at the lowest field where a given Fourier component is observed. According to data in Fig. 1, $\Delta$t = 1.0 ms at $B_{min}$ = 4.5 T and 0.4 ms at $B_{min}$ = 16 T for the $a$ and $b$ oscillations, respectively. The latter component (for which $\Delta$t is the lowest) is considered in the insert of Fig. 3 which displays the field dependence of the $b$ oscillations amplitude obtained for $\delta$t values ranging between 20 and 400 $\mu$s. Below $\sim$ 40 $\mu$s, no influence of $\delta$t is noticed. Oppositely, a significant damping is observed at low field for high $\delta$t values and, as a result, the LK formalism only poorly accounts for the data in this case. As an example, we can consider the dashed line in the insert of Fig. 3 which is the best fit for $\delta$t = 400 $\mu$s. In addition, the scattering time entering the fittings is by about a factor of two larger than its actual value obtained for $\delta$t = 40 $\mu$s (see the discussion below). Similarly, a $\delta$t value below $\sim$ 100 $\mu$s is required for the $a$ oscillations which suggests that the maximum value of $\delta$t required to derive reliable data can be expressed as $\Delta t/n_t$, where $\Delta$t is given by Eq. 1 and $n_t \simeq 10$. Dingle plots of data at 2 K and 4.2 K are obtained with $\delta$t = 40 $\mu$s (see Fig. 3). Effective masses are $m^*_a = 1.23$ and $m^*_b = 0$ (i.e. $R_T = 1$) which are values in good agreement with interlayer magnetoresistance data [9–11]. Best fits of Eqs. 4-5 to Dingle plots are obtained with $B_{MB}$ = 31 T and $T_D$ = 0.7 K ($\tau$ = 1.7 ps) for both components, which are in good agreement with previous studies, as well. Deviation of the fittings from experimental data relevant to $a$ can be noticed at high field. Such discrepancy is not surprising since similar behaviour has already been observed for interlayer magnetoresistance data [9,10]. As a consequence, the field-dependent data deduced from TDO-based measurements are in very good agreement with previously reported interlayer magnetoresistance data.

Finally, we can consider *a posterieri* the requirements for adequate data processing. Namely, the time interval over which FFT of the raw signal are perform ($\delta t = \Delta t/n_t$) in view of the sought oscillator frequency resolution ($\delta$f). As discussed above, the former parameter is obtained through Eq. 1 while $\delta$f can be expressed as a fraction of the SdH oscillation amplitude: $A(B) = n_f \delta f$.

Otherwise, the frequency estimator obtained by FFT can be enhanced by zero padding such as $\delta$t is multiplied by the zero padding factor $n_z$. In such a case, the frequency resolution is given by $\delta f_z = 1/n_z \delta t$ which must be lower than $\delta f = A(B)/n_f$. This leads, still through Eq. 1, to the condition:

$$A(B) > \frac{n_f n_t}{n_z} \times \frac{1}{B^2/F|dB/dt|} \qquad (6)$$

Solid symbols in Fig. 4 are plots of the $a$ and $b$ oscillations amplitude at 2 K deduced from data in Fig. 1. Lines in this figure are plots of Eq. 6 for various values of $n_z/n_f n_t$. Intersected points between experimental data

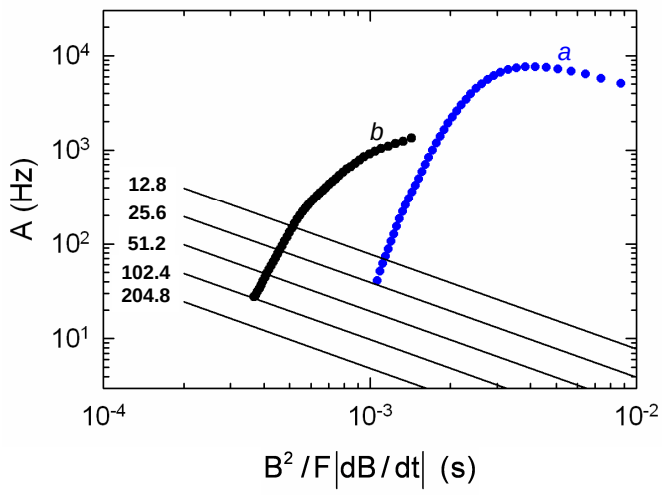


**Fig. 4.** Plots of the $a$ and $b$ oscillations amplitude at 2 K *versus* $B^2/F|dB/dt|$. This parameter can be regarded as the pseudo period of the oscillations with frequency F (see Eq. 1). Solid straight lines are deduced from Eq. 6 with various values of $n_z/n_f n_t$ (see text).

and solid lines can be regarded as the lower detection limit of the measurements for a given set of values ($n_t$, $n_f$, $n_z$). As an example, for $n_z/n_f n_t = 102.4$, all the experimental data of Fig. 4 (solid symbols) lies above Eq. 6 indicating that the above set of values of $n_t$, $n_f$ and $n_z$ is convenient for the collected data. In short, data in Fig. 4 can be regarded as abacus giving the lowest acceptable value of $n_z/n_f n_t$. For a matter of fact, we have checked that higher values do not provide any improvement in the data.

## 4 Conclusion

In conclusion, physical parameters relevant to Shubnikov-de Haas oscillations data can be reliably derived from measurements based on TDO technique in pulsed high magnetic fields. Not only frequencies of complex oscillatory spectra can be determined but also parameters relevant for both thermal damping (effective masses) and field damping (magnetic breakdown field and scattering time) of the oscillations amplitude can be derived. A necessary condition for the reliability of the data analysis is that the time interval over which fast Fourier transform of the raw signal is performed for the determination of the field-dependent oscillator frequency must be kept much smaller than the time interval covered by one quantum oscillation period (a factor of ten in the present case). In connection with this requirement, oscillator frequency determination by FFT must include large enough zero padding coefficient. The relevant parameters of the data processing can be determined through Eq. 6.

This work has been supported by FP7 I3 EuroMagNET II. We acknowledge R. Lyubovskii and R. Lyubovskaya for providing us with the crystal used for the reported measurements and S. Hansel and C. Proust for stimulating discussions.

## References

[1] T. Coffey, Z. Bayindir, J. F. DeCarolis, M. Bennett, G. Esper and C. C. Agosta, Rev. Sci. Inst **71** 4600 (2000).

[2] R. Prozorov,M.D. Vannette, G.D. Samolyuk, S.A. Law, S.L. Budko and P.C. Canfield, Phys. Rev. B 75 014413 (2007).

[3] E.A. Yelland, J. Singleton, C.H. Mielke, N. Harrison, F.F. Balakirev, B. Dabrowski and J. R. Cooper, Phys. Rev. Lett. **100** 047003 (2008).

[4] S.E. Sebastian, N. Harrison, C.H. Mielke, R. Liang, D.A. Bonn, W.N. Hardy and G.G. Lonzarich, Phys. Rev. Lett. **103**

256405 (2009); J. Singleton, C. de la Cruz, R. D. McDonald, S. Li, M. Altarawneh, P. Goddard, I. Franke, D. Rickel, C. H. Mielke, X. Yao and P. Dai, ibid. **104** 086403 (2009).

[5] see e.g. M. V. Kartsovnik, D. Andres, S. V. Simonov, W. Biberacher, I. Sheikin, N. D. Kushch and H. Müller, Phys. Rev. Lett. **96** 166601 (2006); M. V. Kartsovnik, P. D. Grigoriev, W. Biberacher and N. D. Kushch, Phys. Rev.B **79** 165120 (2009).

[6] A. S. Alexandrov and A. M. Bratkovsky, Phys. Rev. Lett. **76** 1308 (1996); Phys. Lett. A **234** 53 (1997) and Phys. Rev. B **63** 033105 (2001); T. Champel, ibid. **65** 153403 (2002); K. Kishigi and Y. Hasegawa, ibid. **65** 205405 (2002); J. Y. Fortin, E. Perez and A. Audouard, ibid. **71** 155101 (2005); J.-Y. Fortin and A. Audouard, ibid. **80** 214407 (2009).

[7] A. B. Pippard, Proc. Roy. Soc. (London) **A270** 1 (1962); P. S. Sandhu, J. H. Kim and J. S. Brooks, Phys. Rev. B **56** 11566 (1997); J. Y. Fortin and T. Ziman, Phys. Rev. Lett. **80** 3117 (1998); V. M. Gvozdikov, Yu V. Pershin, E. Steep, A. G. M. Jansen and P. Wyder, Phys. Rev. B **65** 165102 (2002).

[8] R. B. Lyubovskii, S. I. Pesotskii, A. Gilevski and R. N. Lyubovskaya, J. Phys. I France **6** 1809 (1996).

[9] D. Vignolles, A. Audouard, L. Brossard, S. I. Pesotskii, R. B. Lyubovskii, M. Nardone, E.Haanappel and R. N. Lyubovskaya, Eur. Phys. J. B, **31** 53 (2003).

[10] A. Audouard, D. Vignolles, E. Haanappel, I. Sheikin, R. B. Lyubovskii and R. N. Lyubovskaya, Europhys. Lett. **71** 783 (2005).

[11] D. Vignolles, A. Audouard, R. B. Lyubovskii, M. Nardone, E. Canadell and R. N. Lyubovskaya, Eur. Phys. J. B, **661** 489 (2008).

[12] L. M. Falicov and H. Stachowiak, Phys. Rev. **147** 505 (1966).

[13] R. W. Stark and C. B. Friedberg, Phys. Rev. Lett. **26** 556 (1971).

[14] C. Van Degrift, Rev. Sci. Inst **46** 599 (1975).

[15] H. Srikanth, J. Wiggins and H. Rees, Rev. Sci. Inst **70** 3097 (1999)

[16] E. Ohmichi, E. Komatsu and T. Osada, Rev. Sci. Inst **75** 2094 (2004).

[17] R. N. Lyubovskaia, O. A. Dyachenko, V. V. Gritsenko, Sh. G. Mkoyan, L. O. Atovmyan, R. B. Lyubovskii, V. N. Laukhin, A. V. Zvarykina and A. G. Khomenko, Synth. Metals **42** 1907 (1991).

[18] D. Shoenberg, Magnetic Oscillations in Metals (Cambridge University Press, Cambridge, 1984)