HAL
open science

Multi-criteria Optimization in a Methanol Process

Anita Kovač Kralj, Peter Glavič

To cite this version:

Anita Kovač Kralj, Peter Glavič. Multi-criteria Optimization in a Methanol Process. Applied Thermal Engineering, 2010, 29 (5-6), pp.1043. 10.1016/j.applthermaleng.2008.05.015 . hal-00619275

HAL Id: hal-00619275

https://hal.science/hal-00619275

Submitted on 6 Sep 2011

HAL is a multi-disciplinary open access archive for the deposit and dissemination of scientific research documents, whether they are published or not. The documents may come from teaching and research institutions in France or abroad, or from public or private research centers.

L'archive ouverte pluridisciplinaire **HAL**, est destinée au dépôt et à la diffusion de documents scientifiques de niveau recherche, publiés ou non, émanant des établissements d'enseignement et de recherche français ou étrangers, des laboratoires publics ou privés.

Accepted Manuscript

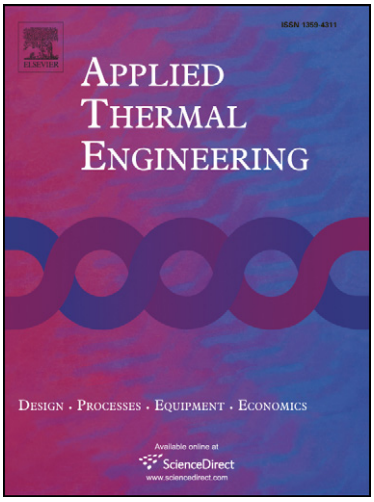

Multi-criteria Optimization in a Methanol Process

Anita Kovač Kralj, Peter Glavič

PII: S1359-4311(08)00235-4
DOI: 10.1016/j.applthermaleng.2008.05.015
Reference: ATE 2521

To appear in: *Applied Thermal Engineering*

Received Date: 24 April 2006
Revised Date: 29 April 2008
Accepted Date: 17 May 2008

Please cite this article as: A.K. Kralj, P. Glavič, Multi-criteria Optimization in a Methanol Process, *Applied Thermal Engineering* (2008), doi: 10.1016/j.applthermaleng.2008.05.015

This is a PDF file of an unedited manuscript that has been accepted for publication. As a service to our customers we are providing this early version of the manuscript. The manuscript will undergo copyediting, typesetting, and review of the resulting proof before it is published in its final form. Please note that during the production process errors may be discovered which could affect the content, and all legal disclaimers that apply to the journal pertain.

ACCEPTED MANUSCRIPT

Multi-criteria Optimization in a Methanol Process

Anita Kovač Kralj and Peter Glavič
Faculty of Chemistry and Chemical Engineering, University of Maribor,
2000 Maribor, Slovenia
Phone: +386 02 2294454 Fax: +386 02 2527 774 E-mail: anita.kovac@uni-mb.si

ABSTRACT

Opportunities for additional profit in retrofits depend very much on the existing plant structure, its parameters and energy system. Combined production of heat flow rate, power and chemical products can improve process efficiency. This paper presents an application of the nonlinear programming (NLP) optimization techniques, including increased chemical product output, heat integration and electricity cogeneration by changing amount flow ratios of raw material, and modifying the separation and reaction systems. The existing NLP model has been extended with basic chemical kinetics, including the effects of changing raw material flow rate ratios on product yield.

A case studied methanol plant was optimized using the NLP model developed earlier by including an additional flow rate of hydrogen (H_2), decreasing flow rate of high pressure steam in crude methanol recycling, and increasing methanol production by 2.5 %. The potential additional profit from the cogeneration and additional methanol production was estimated to be 2.51 MEUR/a.

Keywords: simultaneous optimisation, NLP, modelling, cogeneration, flow rate ratios

ACCEPTED MANUSCRIPT

NOMENCLATURE

Abbreviations

CHP	combined heat and power
NLP	nonlinear programming
HI	heat integration

Subscripts

add	additional
s	component
r	chemical reaction
el	electricity

Parameters

A	area of heat exchanger [m^2]
C_{37}	cost of 37 bar steam [EUR/(kW a)]
C_{el}	cost of electricity [EUR/(kW a)]
C_{H_2}	cost of H_2 purification [EUR/t]
C_M	price of methanol [EUR/t]
C_m	molar heat capacity [J/(mol K)]
C_{tax}	taxes and costs of CO_2 emissions [EUR]
F	amount flow rate [mol/s]
G	molar Gibbs (free) energy [J/mol]
K_r	equilibrium constant of reaction r [1]
n	amount [mol]
P	power [W]
q	mass flow rate [kg/s]
r	payback multiplier [1]
T	temperature [K]
t	payback time [a]
V_{max}	maximum additional annual profit [EUR/a]
η_{tur}	thermodynamic efficiency of medium pressure turbine [1]
η_{gen}	mechanical efficiency of the generator [1]
y	equilibrium gas composition [1]
φ	conversion rate of reaction r [mol/s]
Φ	heat flow rate [W]
ξ	extent of reaction [mol]

ACCEPTED MANUSCRIPT

1 Introduction

Combined heat and power production, together with process modification, can be optimized by using thermodynamic (pinch analysis) or by mathematical methods (nonlinear programming, NLP).

Pinch analysis can increase energy efficiency of individual chemical processes. It has established itself as a highly versatile tool for process design. Originally pioneered as a technique for reducing energy costs of new plants, it was later adapted for retrofits, too. Even pinch analysis does not guarantee a global optimal solution, because it cannot be used simultaneously with the material balance, but it quickly proposes good ideas for heat integration of complex processes, e.g. by using an extended grand-composite curve [1]. It can be used to guide heat and power integration (cogeneration), too. A step-wise methodology for gas turbine integration, with combined heat and power cogeneration, based on pinch analysis was developed by Axelsson and co-authors [2].

Horlock [3] has defined the criterion for primary energy savings at combined heat and power plants (CHP). A comparative study has been performed based on this criterion for different configurations of a CHP plant. Havelsky [4] has analysed the problem of energy efficiency evaluation in a trigeneration system for combined heat, cooling, and power production. Equations have been presented for energy efficiency and primary energy savings. Separate and combined energy production has been compared. Lucas [5] analysed a cogeneration system on the basis of thermodynamic laws. Several thermodynamic criteria have been defined, such as plant efficiency, and power to heat ratio.

A mathematical optimisation method can be classified as a simultaneous approach, which accounts for capital and energy trade-offs, accurately. The NLP model [6], based on mathematical

ACCEPTED MANUSCRIPT

programming, can be used for rigorous process modelling, including heat and power integration, and process modifications. Although simultaneous, it is difficult to converge for complex and energy intensive processes, because the number of variables increases with the number of combinations.

In this paper, simultaneous NLP mathematical optimization techniques for electricity cogeneration using a gas turbine [7] is supplemented by increased production when changing amount flow rate ratios of raw materials (reactants).

2 Changing Raw Material Flow Rate Ratios

Opportunities for increasing production depend very much on the reaction conversion rates, and reaction kinetics. The thermodynamic and kinetic properties of chemical reactions (r = 1, …, R) give a good prediction about flow rate and the compositions of raw material, its conversion to a product, and parameter conditions. The amount flow rate of any component (s = 1, …, S) depends on the equilibrium constant (K_e). For the hypothetical reversible chemical reaction:

$$\nu_A A + \nu_B B \leftrightarrows \nu_C C + \nu_D D$$

the equilibrium constant is defined as:

$$K_e = \frac{c_C^{\nu_C} \cdot c_D^{\nu_D}}{c_A^{\nu_A} \cdot c_B^{\nu_B}},$$

where ν_s is stoichiometric coefficients and c_s concentrations of component s.

The equilibrium constant determines the extent of a chemical reaction at equilibrium. It can be calculated if the concentration of each reactant and product in a reaction at equilibrium is known.

ACCEPTED MANUSCRIPT

The conversion rate of reaction r (ω) can be calculated from a differential change of the reaction extent ($\mathrm{d}\xi$), with time t:

$$\omega = \mathrm{d}\xi_r / \mathrm{d}t \qquad r = 1, \ldots, \mathrm{R} \tag{1}$$

A differential change of the reaction extent ($\mathrm{d}\xi$) can be calculated from a differential change of the amount ($\mathrm{d}n_s$) divided by its stoichiometric coefficient:

$$\mathrm{d}\xi = \mathrm{d}n_s / \nu_{s,r} \qquad s = 1, \ldots, \mathrm{S} \quad r = 1, \ldots, \mathrm{R} \tag{2}$$

The extent of a reaction characterizes how the advancement of the reaction has taken place. Equation 2 has to be integrated from the initial $\xi = 0$ and $n_s = n_{s,\mathrm{in}}$ to the outlet ξ and $n_{s,\mathrm{out}}$:

$$\int_{n_{s,\mathrm{in}}}^{n_{s,\mathrm{out}}} \mathrm{d}n_s = \nu_{s,r} \int_0^{\xi} \mathrm{d}\xi \qquad s = 1, \ldots, \mathrm{S} \quad r = 1, \ldots, \mathrm{R} \tag{3}$$

The outlet amount flow rate for component s in reaction r is:

$$F_{s,\mathrm{out}} = n_{s,\mathrm{in}} + \sum_r \nu_{s,r}\, \xi \qquad s = 1, \ldots, \mathrm{S} \quad r = 1, \ldots, \mathrm{R} \tag{4}$$

The amount flow rate F is defined as:

$$F_s = \mathrm{d}n_s / \mathrm{d}t \qquad s = 1, \ldots, \mathrm{S} \tag{5}$$

and outlet amount flow rate for component s is:

$$F_{s,\mathrm{out}} = F_{s,\mathrm{in}} + \sum_r \nu_{s,r}\, \omega \qquad s = 1, \ldots, \mathrm{S} \quad r = 1, \ldots, \mathrm{R} \tag{6}$$

The equilibrium constant of reaction r (K_r) [8] can be calculated by the minimization of Gibbs (free) energy (ΔG):

$$K_r = \mathrm{e}^{(-\Delta G_r / RT)} \qquad r = 1, \ldots, \mathrm{R} \tag{7}$$

Higher reactant flow rate favours reactions with higher conversion, while optimization of raw material composition can increase production.

ACCEPTED MANUSCRIPT

The changing amount flow rate of reactant (ΔF) is affecting the heat flow rate of the outlet reaction stream (Φ), which can enlarge electricity cogeneration and heat integration in a process (Fig 1). The simultaneous approach can optimize the trade-off between heat and electricity cogeneration. Cogeneration is constrained by the lowest possible outlet temperature of the gas turbine. Cogeneration is choosing the lowest temperature limit because cogeneration is usually more profitable than heat integration.

Fig. 1.

3 Case Study

The changing flow rate ratios of raw materials have been evaluated using a complex, low-pressure Lurgi methanol process [8], enlarged by a gas turbine. It is composed of three subsystems (Fig. 2):

- production of synthesis gas
- production of crude methanol and
- purification of methanol (F301, D301–D304).

In the first subsystem, natural gas is desulphurized (D101) and heated in a steam reformer (REA-1) where synthesis gas is produced from natural gas and steam:

$$3C_2H_6 + 6.5H_2O \rightarrow 2CO + 12H_2 + 1.75CH_4 + 2.25CO_2 \qquad {}_rH^{298} = 196.17 \text{ kJ/mol} \qquad (R1)$$

$$3C_3H_8 + 10H_2O \rightarrow 3.5CO_2 + 17H_2 + 3CO + 2.5CH_4 \qquad {}_rH^{298} = 277.88 \text{ kJ/mol} \qquad (R2)$$

$$3C_4H_{10} + 13.5H_2O \rightarrow 4.75CO_2 + 22H_2 + 4CO + 3.25CH_4 \qquad {}_rH^{298} = 361.48 \text{ kJ/mol} \qquad (R3)$$

$$CH_4 + H_2O \leftrightarrows CO + 3H_2 \qquad {}_rH^{298} = 206.08 \text{ kJ/mol} \qquad (R4)$$

$$CO + H_2O \leftrightarrows CO_2 + H_2 \qquad {}_rH^{298} = -41.17 \text{ kJ/mol} \qquad (R5)$$

ACCEPTED MANUSCRIPT

The hot stream of the synthesis gas, leaving the reactor REA-1 is cooled in the boiler E107, in heat exchangers E109, E110, E111, in the air cooler EA101 and in the water cooler E112. The condensate is expanded in flash separators: F1, F2, F107 and F108. The synthesis gas is compressed in a two-stage compressor G201-I and G201-II.

In the second subsystem, methanol is produced by catalytic hydrogenation of carbon monoxide and/or carbon dioxide in the reactor REA-2 with three main, reversible reactions (r = R6, R7, R8):

$$CO + 2H_2 \leftrightarrows CH_3OH \qquad {}_rH^{298} = -90.77 \text{ kJ/mol} \qquad \text{(R6)}$$

$$CO_2 + 3H_2 \leftrightarrows CH_3OH + H_2O \qquad {}_rH^{298} = -49.58 \text{ kJ/mol} \qquad \text{(R7)}$$

$$CO_2 + H_2 \leftrightarrows CO + H_2O \qquad {}_rH^{298} = 41.19 \text{ kJ/mol} \qquad \text{(R8)}$$

Fig. 2.

The second reactor is operated at 51 bar pressure and unconverted gas is recycled. The retrofitted reactor is operated within the existing parameters. The high recycle ratio and high operating pressure drop after the reactor could be exploited to produce electricity, using a gas turbine (TUR) placed downstream of the reactor (Fig. 3). The turbine is using process gas as a working fluid. The inlet stream of the reactor is heated by a process stream (HEPR) or by high pressure steam (HEST), or by combining both of them. The stream leaving the turbine is cooled using an air cooler (HEA) and a water cooler (HEW), before entering the flash separator (SEP). The liquid stream of the separation is the product, while the recycled gas stream is compressed to 51 bar again in a new, two-stage compressor (COMP1, 2) with intermediate water cooling (HEW1).

The NLP model used has been described in detail earlier [8]; it contains 120 equations and 128 variables. The parameters of all the process units in the retrofitted model, shown in Fig. 3: the heat

ACCEPTED MANUSCRIPT

exchanger network, flash separators, compressors, mixer, splitters, reactors [8] and the turbine [7] were simultaneously optimized using the GAMS/MINOS [9]. This NLP can be solved with a large-scale reduced gradient method (MINOS in our case). The model is non-convex, it does not guarantee the global optimum solution, but it quickly gives good results for nontrivial, complex processes. The NLP model used, contained variables of all the process parameters: molar heat capacities, material flow rates, heat flow rates and temperatures, which were limited by real constraints. The NLP model had variable heat capacity flow rates for all the streams and the structure could also be varied by using them. The NLP model contained equations for structural and parametric optimization. The simultaneous mathematical optimization method for the methanol process using the NLP model has regarded effects of the:

- additional flow rate of H_2 before the two-stage compressor (G201I-II) – hydrogen is separated from the purge gas by an existing (but inactive) pressure swing adsorption (PSA) column (see section 3.1),
- decreased raw material flow rate of high pressure steam as a reactant (section 3.2),
- increased methanol production, depending on the raw material (H_2 and steam) flow rates, the separator (SEP) and the reactor system (REA-1, REA-2),
- electric power cogeneration,
- heat integration between outlet and inlet streams; the inlet stream of the reactor REA-2 can be heated by a process stream in the heat exchanger (HEPR) and/or by high pressure steam (HEST), with varying heat flow rates, and
- optimized exhaust flow rate (purge gas).

Fig. 3.

ACCEPTED MANUSCRIPT

The goal of the optimization was to maximize additional annual income and minimize additional annual depreciation (eq. 8). The additional annual income was summed up (Table 1) as:

- cogeneration of the additional electricity ($P_{tur} \cdot \eta_{tur} \cdot \eta_{gen}$),
- additional production of methanol (ΔF_M) and
- savings obtained by decreasing the flow rate of high pressure steam (ΔF_{steam}) as a reactant.

The additional annual depreciation (Table 1) was derived from the investments into:

- the gas turbine with power P_{tur},
- the compressors COMP1 and COMP2 and
- the enlarged and new areas of heat exchanger (A_{HE}).

The objective function included:

- H_2 purification cost in the existing PSA column and
- the cost of buying the high pressure steam in the heat exchanger HEST.

Maximum additional annual profit was calculated according to the Eq. 8:

$$V_{max} = C_{el} \cdot P_{tur} \cdot \eta_{tur} \cdot \eta_{gen} + C_M \cdot \Delta F_M + C_{37} \cdot \Delta F_{steam}$$
$$- C_{37} \cdot \Phi_{HEST} - (22\,946 + 13.5 \cdot P_{tur}) \cdot 4 - [2\,605 \cdot P_{COMP1}^{0.82} - 2\,605 \cdot P_{COMP2}^{0.82}$$
$$- \sum_{new} (8600 + 670 \cdot A_{HE,\,new}^{0.83}) \cdot 3.5 \cdot 2 - \sum_{add} 670 \cdot \Delta A_{HE,\,add}^{0.83} \cdot 3.5 \cdot 2] \cdot r - C_{H_2} \cdot F^{out,\,p,\,H_2} \quad (8)$$

new = HEST, HEW1; add = HEW, HEA, HEPR

In this model the existing areas can be used ($A_{HE,\,ex}$), enlarging them with additional areas ($\Delta A_{HE,add}$) if necessary. The additional annual depreciation of the enlarged and new ($A_{HE,\,new}$) areas of the heat exchangers and compressors (Table 1) were multiplied by the payback multiplier (r = 0.216; [10]).

Table 1.

ACCEPTED MANUSCRIPT

3.1 Decreasing flow rate of high pressure steam

Synthesis gas is produced from natural gas using 33.15 t/h of high pressure steam in the reactor (REA-1). The flow rate of high pressure steam (as the raw material in REA-1) can be decreased to the lower operating bound constraint of 32.00 t/h, thereby reducing the high pressure steam usage by 1.149 t/h (9 192 t/a with the operating time fraction of 8 000 h/a). All the other process units are operating within the existing parameters. The lower high pressure steam flow rate in REA-1 changes the reaction equilibriums of R4 and R5, as well as the degree of conversion in both, the synthesis gas and the methanol synthesis reactors. Higher equilibrium degree of conversion in the synthesis gas reactor decreases the CO_2 and H_2 flow rates in R5 by 0.084 mol/s, and increases the flow rate of CO in R4 by the same 0.084 mol/s. Yet, the high pressure steam flow rate in the synthesis gas reactor can be decreased by 1.149 t/h (63.833 kmol/h) only, due to the lower bound constraint of 32.00 t/h (1 777.7 kmol/h). This is changing the amount flow rates of components in the synthesis gas according to the Eq. 9:

$$F_{\mathrm{syn},\,i} = F_{\mathrm{syn},\,i0} + \Delta F_{\mathrm{steam}} \cdot \Delta F_i \qquad i = CO_2,\ \mathrm{CO}\ \mathrm{and}\ H_2, \tag{9}$$

where $F_{\mathrm{syn},\,i0}$ is the amount flow rate of a component i in the synthesis gas (i = CO_2, CO and H_2), when using 33.15 t/h (1 841.6 kmol/h) of high pressure steam, and ΔF_i is the amount flow rate change of component i in the synthesis gas, when using 32.00 t/h of high pressure steam, the latter depends on the high-pressure steam flow rate change, $\Delta F_{\mathrm{steam}}$, too. The sum of the components is equal to the total amount flow rate, Eq. 10:

$$F_{\mathrm{syn}} = \sum_i F_{\mathrm{syn},\,i} \tag{10}$$

ACCEPTED MANUSCRIPT

The methanol production is increased depending on: the H_2 and steam flow rates, the separation in the separator (SEP), the extent of reaction in the reactor (REA-2), and the purge flow rate. Additional production of methanol ΔF_M can be calculated from the relationship:

$$\Delta F_M = F_M - F_{M0} \quad (11)$$

F_M being the optimized amount flow rate of methanol, and F_{M0} (138.97 mol/s) the existing one.

3.2 Additional flow rate of hydrogen

Additional flow rate of H_2 in the crude methanol recycle is increasing the methanol production. The methanol conversion rate is calculated for the equilibrium reaction system (Eq. 6) depending on the raw material flow rates, the recycle flow rate, and the operating conditions.

Hydrogen is separated from the purge gas by the existing pressure swing adsorption (PSA) column by removing N_2, CO, CO_2, CH_4 and H_2O to deliver hydrogen with the purity between 90 % and 99.99 %. Pressure swing adsorption uses a molecular sieve adsorbent packing, with 50 % efficiency. The PSA column is operated under the pressure of 26 bar, and the temperature of 35 ^{o}C, with a maximal capacity of H_2 equal to 244 kmol/h (488 kg/h).

The amount balance of the pressure swing adsorption (PSA) column in the NLP model is shown simplified in Eqs 12 and 13:

$$F_{in,\,p} = F_{out,\,p,\,H_2} + F_{out,\,p} \quad (12)$$

$$F_{out,\,p,\,H_2} = F_{H_2} \cdot \eta_{PSA} \quad (13)$$

ACCEPTED MANUSCRIPT

The inlet purge stream amount flow rate ($F_{in,\ p}$) is the sum of the outlet streams of the pure H_2 component ($F_{out,\ p,\ H_2}$) and the remaining purge gas ($F_{out,\ p}$) ones. F_{H_2} is the flow rate of H_2 in the purge gas. Pressure swing adsorption uses a packed column having 50 % efficiency (η_{PSA} = 0.5). $F_{out,\ p,\ H_2}$ in purge gas can be varied up to 244 kmol/h (488 kg/h), effecting the optimal process structure, and the production rate. The H_2 purification cost in the existing PSA column and the inlet injection cost in the recycle were estimated to 0.20 EUR/kmol.

3.3 Results

The simultaneous NLP model of heat and power integration with a maximal additional amount flow rate, $F(H_2)$ = 244 kmol/h, was selected for electricity cogeneration, using a gas turbine pressure drop from 49.7 bar to 37 bar, and an outlet temperature, $T_{tur,\ out}$ = 110 ^{o}C (Fig. 4). The existing PSA column can be used for the purification of H_2. The total additional annual methanol production (including all the effects of the additional flow rate of hydrogen, reduced flow rate of steam, and conversion flow rates) is 3.5 mol/s or 403.2 kg/h. This structure enables 17.5 MW of electricity to be generated. The steam exchanger (HEST) needs 22.85 MW of heat flow rate. The integrated process streams exchange 5.18 MW of heat flow rate in HEPR. The powers of the first and second compressors are 2.9 MW and 4.0 MW, respectively. The HEW1 exchanges 3.0 MW. In the heat exchangers HEW and HEA 5.3 MW and 8.0 MW of heat flow rate are exchanged by cooling, respectively. The purge gas outlet fraction flow rate is decreased from 5.9 % to 5.2 %. Table 2 compares the stream data of the case process, and the optimized one.

ACCEPTED MANUSCRIPT

Table 2.

The additional annual depreciation of the gas turbine, new heat exchangers (HEST, HEW1, having areas of 730 m^2 and 324 m^2, respectively), and the new two stage compressor is optimized to 2.69 MEUR/a. The cost of the high pressure steam used in HEST is estimated to be 2.43 MEUR/a. The H_2 purification cost in the existing PSA column and inlet injection cost in the recycle is expected to reach 0.4 MEUR/a.

The annual income from the additional electricity produced is supposed to be 7.6 MEUR/a, and for the additional methanol produced 0.37 MEUR/a. The steam flow rate can be reduced by 9 192 t/a, with a cost reduction of 0.06 MEUR/a. The net additional profit of the process, including cogeneration and additional methanol production is estimated to be 2.51 MEUR/a with a payback time, t = 2.3 a.

The NLP program includes 130 equations and 138 variables with a computation time of 17 s, using VAX-3100, and the GAMS program [9].

Fig. 4.

4. Conclusions

In the process industries, NLP optimization can lead to considerable savings in energy consumption. Combined heat and power integration adds degrees of freedom to the optimisation method, yielding additional savings.

ACCEPTED MANUSCRIPT

This paper has presented an efficient use of the NLP model formulation for a simultaneous cogeneration of electricity, using gas turbine and process heat integration, and including additional equations for reaction conversion. The simultaneously optimized process, using the NLP model of equations and constraints for a low-pressure Lurgi methanol plant includes the effects of raw material flow rates (the additional flow rate of H_2, and the reduced flow rate of steam as reactants), reactor conversion rate, temperature efficiency of flash separation, flow rate fraction of the exhaust (purge) stream, and energy integration. The higher equilibrium degrees of conversion with all the effects on both reactors, can increase the conversion of methanol by 2.5 %, producing 3 200 t/a of additional methanol. We have carried out simultaneous heat, power and reaction optimization, with a potential additional profit of 2.51 MEUR/a. The process is more efficient if raw material flow rates are optimised and the product flow rates are increased. It is possible to achieve additional energy saving by the cogeneration of electricity.

5. References

[1] P. Glavič, Complex integration of processes, The Canadian Journal of Chemical Engineering 79 (7) (2001) 643-654.

[2] H. Axelsson, S. Harvey, A. Asblad and T. Berntsson, Potential for greenhouse gas reduction in industry through increased heat recovery and/or integration of combined heat and power, Applied Thermal Engng 23 (2003) 65-87.

[3] Horlock J. H., Cogeneration-combined heat and power (CHP). Thermodynamics and Economics, Pergamon Press, Oxford (1987).

[4] Havelsky V., Energetic efficiency of cogeneration systems for combined heat, cold, and power production. International Journal of Refrigeration 22 (1999) 479-485.

[5] K. Lucas, On the thermodynamics of cogeneration, International Journal of Thermal Sciences 39 (2000) 1039-1046.

ACCEPTED MANUSCRIPT

[6] L. T. Biegler, I. E. Grossmann and A. W. Westerberg, Systematic methods of chemical process design, Prentice Hall, Upper Saddle River, New Jersey (1997) 1-408.

[7] A. Kovač Kralj and P. Glavič, Optimization of gas turbine using NLP model, Proceedings of FOCAPD, Princeton (2004) 545 548.

[8] A. Kovač Kralj, P. Glavič and Z. Kravanja, Retrofit of complex and energy intensive processes II: stepwise simultaneous superstructural approach, Comput. chem. Engng 24/1 (2000) 125 138.

[9] A. Brooke, D. Kendrick and A. Meeraus, GAMS: A User's Guide, Palo Alto, Scientific Press, (1992).

[10] S. Ahmad, Heat exchanger networks: Cost tradeoffs in energy and capital. PhD Thesis, UMIST, Manchester (1985) 113-306.

[11] T. N. Tjoe and B. Linnhoff, Using pinch technology for process retrofit. Chem. Engng 28 (1986) 47-60.

[12] R. Swaney, Thermal integration of processes with heat engines and heat pumps. AIChE J. 35/6 (1989) 1010.

ACCEPTED MANUSCRIPT

ACCEPTED MANUSCRIPT

FIGURES

Fig 1: The simplified temperature / heat flow rate (T/Φ diagram before and after changing the flow rate (ΔF) of the raw material: performing heat integration (HI), and cogeneration before and after the change.

Fig. 2: Process flow diagram of a low-pressure Lurgi methanol plant.

Fig. 3: Simplified flow sheet of the methanol process using a gas turbine, with additional H_2 flow rate (additional units are shown shaded).

Fig. 4: Modified flow sheet of the methanol plant using a gas turbine with an additional H_2 flow rate.

ACCEPTED MANUSCRIPT

ACCEPTED MANUSCRIPT

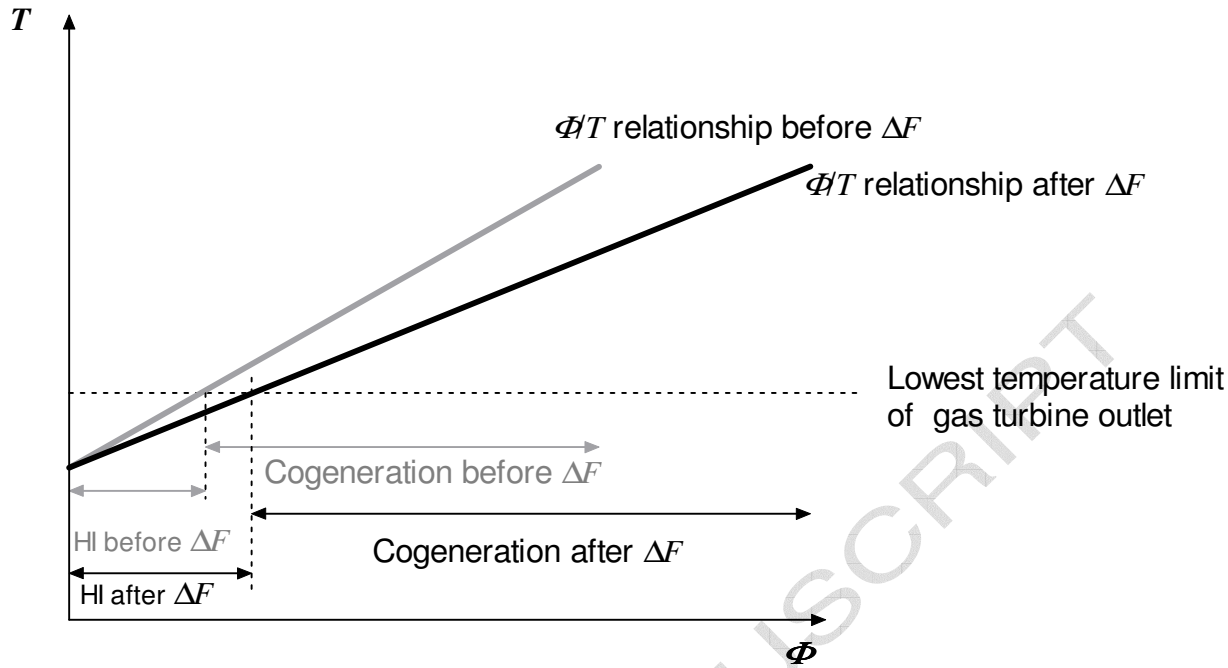

Fig. 1: The simplified temperature / heat flow rate (T/Φ diagram before and after changing the flow rate (ΔF) of the raw material: performing heat integration (HI), and cogeneration before and after the change.

ACCEPTED MANUSCRIPT

ACCEPTED MANUSCRIPT

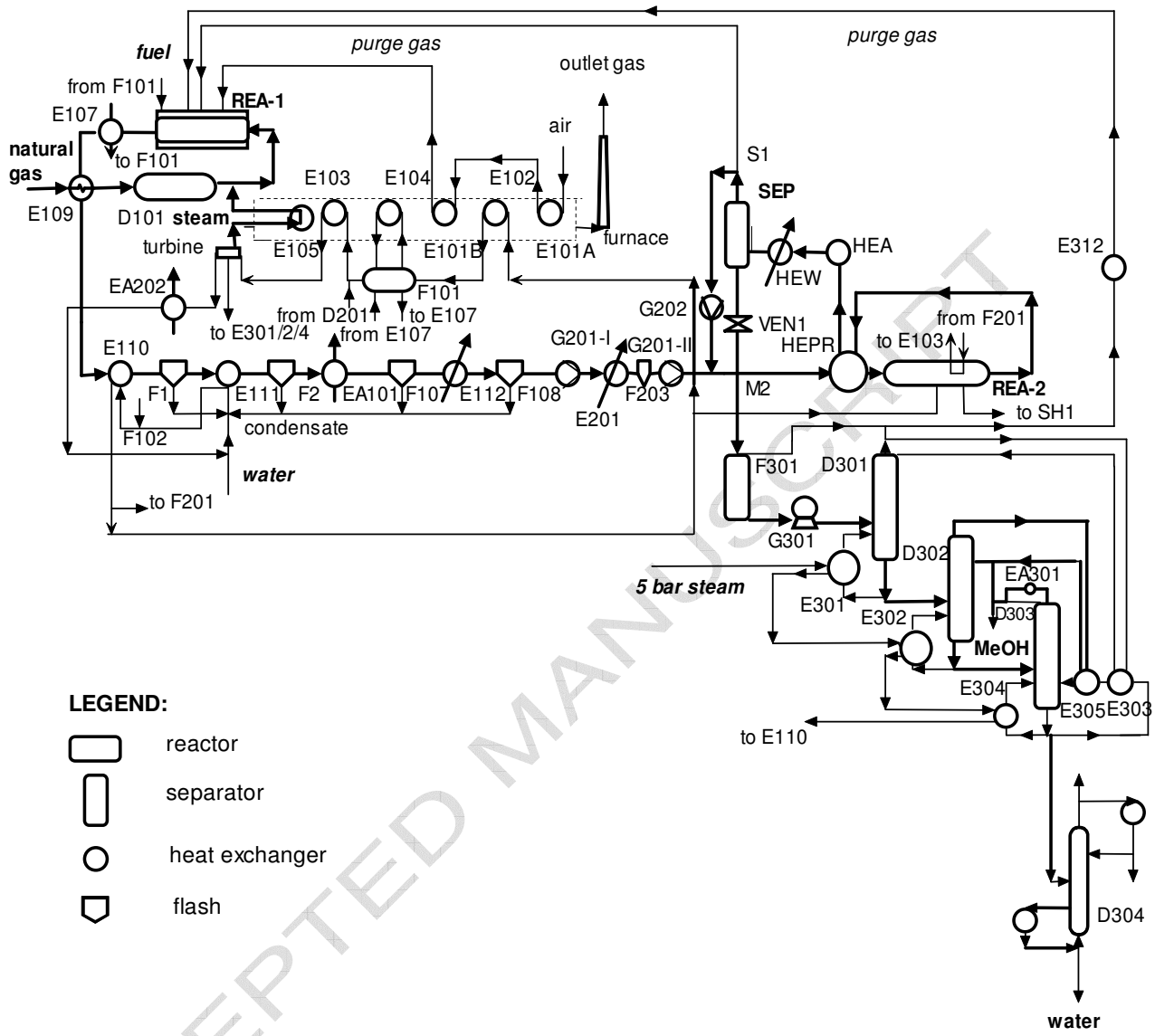

Fig. 2: Process flow diagram of a low-pressure Lurgi methanol plant.

ACCEPTED MANUSCRIPT

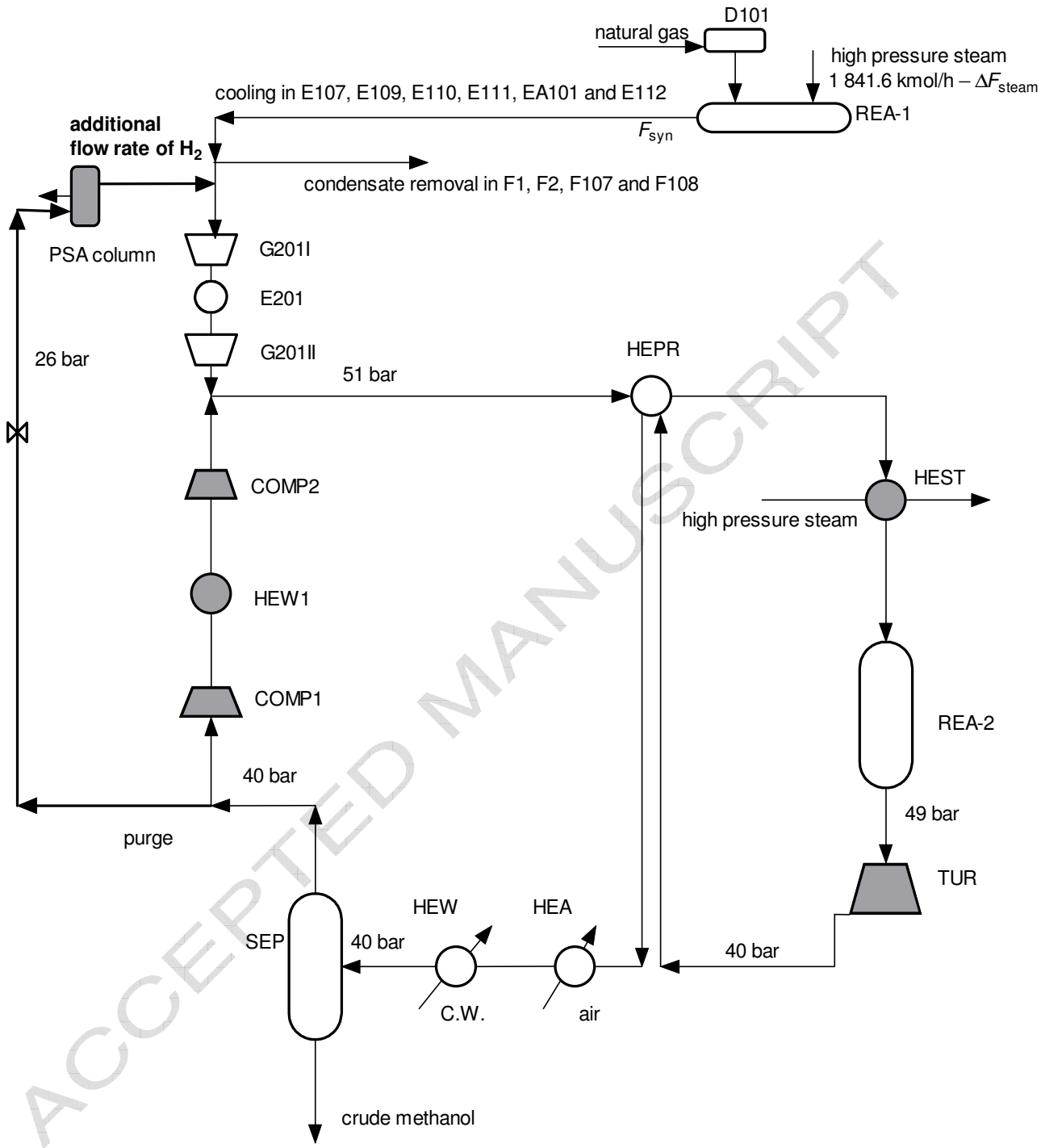

Fig. 3: Simplified flow sheet of the methanol process using a gas turbine, with additional H_2 flow rate (additional units are shown as shaded).

ACCEPTED MANUSCRIPT

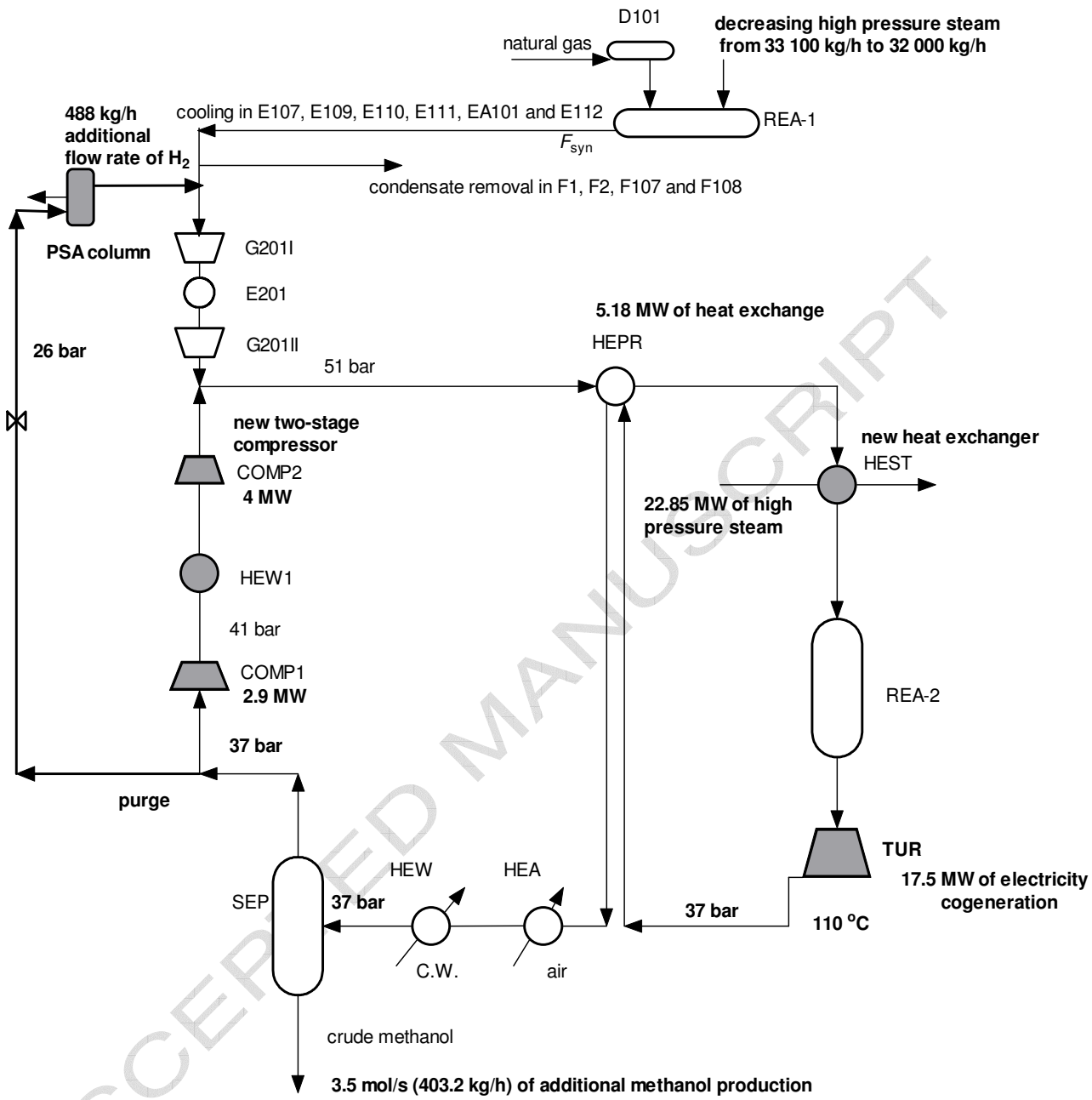

Fig. 4: Modified flow sheet of the methanol plant using a gas turbine with an additional H_2 flow rate.

ACCEPTED MANUSCRIPT

TABLE

Table 1: Cost items for example process.
Table 2: Comparisons between the base case and optimized stream flow rates.

ACCEPTED MANUSCRIPT

ACCEPTED MANUSCRIPT

Table 1: Cost items for the example process.

Installed cost of heat exchanger*/EUR: $(8\,600 + 670\,A^{0,83}) \cdot 3.5 \cdot 2$ #
Installed cost of compressor, C_{com}&/EUR: $2\,605 \cdot P^{.82}$
Installed cost of gas turbine, C_{tur}&/(EUR/a): $(22\,946 + 13.5\,P_{tur}) \cdot 4$ #
Cost of H_2 purification in existing PSA column and inlet injection in recycle (C_{H2}) /(EUR/kg): 0.1
Price of methanol (C_M)+/(EUR/t): 115.0
Price of electricity (C_{el})**/(EUR/(kW · a)): 435.4
Price of 37 bar steam (C_{37})**/(EUR/(kW · a)): 106.3
Price of cooling water (C_{CW})**/EUR/(kW · a): 6.2

* [11]; A = area in m^2

** [12]

& [6]; P = power in kW

\+ ten years average

\# the published cost equations for the equipment are adjusted to the real, higher industrial costs, by multiplier of 2 or 4.

ACCEPTED MANUSCRIPT

ACCEPTED MANUSCRIPT

Table 2: Comparisons between base case and optimized stream flow rates.

Component	Case mass flow rate q/(kg/h)	Optimized mass flow rate q/(kg/h)
After reactor REA-1		
CO	10 846	10 996
CO_2	6 986	6 750
H_2	3 606	3 595
CH_4	1 616	1 616
After reactor REA-2		
CO	8 169	9 023
CO_2	13 447	8 486
H_2	22 874	33 050
CH_4	30 526	28 569
CH_3OH	18 330	19 237
Crude methanol		
CO	20	12
CO_2	318	116
H_2	4	3
CH_4	140	84
CH_3OH	16 031	16 452

ACCEPTED MANUSCRIPT