HAL open science

Developments in microultrasonic machining (MUSM) at FEMTO-ST

J.-J. Boy, E. Andrey, A. Boulouize, C. Khan-Malek

To cite this version:

J.-J. Boy, E. Andrey, A. Boulouize, C. Khan-Malek. Developments in microultrasonic machining (MUSM) at FEMTO-ST. International Journal of Advanced Manufacturing Technology, 2010, 47 (1-4), pp.37-45. 10.1007/s00170-009-2168-7 . hal-00609377

HAL Id: hal-00609377

https://hal.science/hal-00609377v1

Submitted on 26 Apr 2021

HAL is a multi-disciplinary open access archive for the deposit and dissemination of scientific research documents, whether they are published or not. The documents may come from teaching and research institutions in France or abroad, or from public or private research centers.

L'archive ouverte pluridisciplinaire **HAL**, est destinée au dépôt et à la diffusion de documents scientifiques de niveau recherche, publiés ou non, émanant des établissements d'enseignement et de recherche français ou étrangers, des laboratoires publics ou privés.

Distributed under a Creative Commons Attribution 4.0 International License

Developments in microultrasonic machining (MUSM) at FEMTO-ST

J. J. Boy, **E. Andrey**, **A. Boulouize**, **Chantal Khan-Malek**

Abstract The aim of the article is to present new developments in microultrasonic machining concerning design and manufacture of a complete acoustic system optimized for ultraprecise processing on 2-in. wafer and examples of microstructures produced at FEMTO-ST institute, particularly in piezoelectric materials. The potentialities and the limitations of the ultrasonic machining technique are discussed. The choice and the dimensions of the material for the acoustic transducer were defined through finite element modeling. Other parameters affecting the machining process such as static load of the tool, vibration amplitude, grain material and size of the abrasive slurry, and workpiece characteristics were hierarchized experimentally in order to increase machining quality (surface state, precision) and minimize tool wear.

Keywords Ultrasonic machining · Sonotrode · Tool wear · Piezoelectric transducer · Aspect ratio · Microtechnology · Glass · Quartz · PZT

J. J. Boy (✉) · E. Andrey
FEMTO-ST—UMR CNRS 6174/dept TF,
26 chemin de l'Epitaphe,
25000 Besancon, France
e-mail: jjboy@ens2m.fr

A. Boulouize
TEMIS Innovation (μUSM)—18,
rue Alain Savary,
25000 Besancon, France

C. Khan-Malek
FEMTO-ST—UMR CNRS 6174/dept MN2S—32,
avenue de l'Observatoire,
25030 Besancon Cedex, France

1 Introduction

Whereas machining technologies starting from bulk materials are well established for metals and alloys, the machining of brittle, hard, non-conductive materials still poses considerable problems. Particular challenges are the generation of non-rotationally symmetrical 3D shapes, with high aspect ratio and processes inducing neither residual stress nor cracks.

Techniques such as photolithography and etching (wet or dry) derived from semi-conductor industry are also sometimes used but they need special processes to be developed for each material and adapted to its chemical reactivity. Moreover, in the case of wet etching, the geometry of the crystalline workpiece may be limited by the anisotropy of the etching process vs. the crystallography of the materials. So, such processes, once developed, may be interesting for mass production but not efficient for prototyping or small series.

Ultrasonic machining (USM) is an efficient and cost-effective technique for precision machining of difficult-to-machine materials. It is a purely mechanical process based on abrasive material removal and applicable to both conductive and non-conductive materials.

The fundamental principles of USM, the material removal mechanisms, and the effect of major USM process variables effecting material removal rate, machining accuracy, and surface finish (such as tool/sonotrode design; amplitude and frequency of ultrasonic oscillations; concentration, hardness, and size of abrasive particles; static load; and properties of the workpiece material) were studied by a number of groups [1–5].

Markov [6] classified materials into three categories with regard to the ability of USM for machining them. Type I materials, like glass, which are very brittle, are easily

machinable by the USM process. The material is removed by the propagation of minute cracks that are inherently present in such materials. Type II materials, which exhibit some plastic deformation before fracture, like hardened steels, can be machined although to some extent. Type III materials, like copper and soft steel, are ductile materials and are unsuitable in principle for USM (it was recently shown that in ductile mode, the workpiece material is not removed but is displaced as it is observed for some fine polishing operations; e.g., [7]).

Therefore, USM is particularly suited to the machining of materials with a low ductility and a hardness above 40 HRC (Hardness Rockwell C) (4), such as quartz (e.g., [8]), diamond and zircon, sapphire, glass, graphite, silicon and germanium, carbides, ferrites, optical fibers, and ceramics (e.g., [9]) as well as hard carbon alloys, hardened stainless steel, brass, titanium, and alloys (e.g., [10], etc). The material removal rate obtained by this process is often acceptable for super-hard and brittle materials.

Unlike other processes like electrical discharge machining (EDM and micro-EDM, adapted to conductive materials) or laser ablation, USM neither thermally damages the workpiece nor creates significant levels of stresses. USM is therefore particularly valuable in machining delicate components, where it is essential to eliminate stresses or thermal distortions [11]. As it is also a non-chemical and non-electrical process, it does not either change the chemical or physical properties of the workpieces.

Novel developments in USM technique concern non-contact machining methods for ultraprecision machining and applications requiring high-quality surface finish [12, 13]. We can also mention that a number of hybrid technologies were also developed to increase, e.g., material removal rate, aspect ratio, and surface quality, in particular combining USM and EDM [14–16].

At FEMTO-ST lab, we use USM for the precise machining of non-conductive materials, which are difficult to machine otherwise such as piezoelectric crystals, glass or fused silica and ceramics.

Quartz and other piezoelectric single crystals ($LiNbO_3$ or $LiTaO_3$, $GaPO_4$, and, more recently, crystals from the Langasite family) are used as raw materials to build resonators, filters sensors, or other microsystems, which introduced in an electronic oscillator, work at their resonant frequency. Usually, the quality and the stability of the output frequency intrinsically depend naturally not only on the material quality but also on the possible damages induced by the mechanical operations. For example, the resolution (it means here smallest sensitivity) of quartz accelerometers or gyrometers working at low frequencies (generally a few tens of kHz) is drastically linked to the stress distribution in the entire volume of the device (and not just in the vibrating part due to the role of the seismic mass), and so, it is important to prevent and avoid damages and particularly twins, which can be generated by stress and can propagate in the crystal [11].

In the field of microelectromechanical systems (MEMS) production, glass or fused silica are also widely used as structural and functional material in micrototal analysis systems. If the device is produced by classical micro-techniques developed for silicon, the packaging sometimes includes a glass substrate or cover in which it is necessary to machine cavities or via holes.

One reason for processing ceramics with USM is that the machinability of ceramics is very limited. Traditional machining of ceramics is done with diamond-cutting tools for which the resolution is limited by the tool size to a few hundred microns. Characteristic ceramic properties such as high hardness, lack of ductility, and low resistance to thermal shock often result in low material removal rate, relatively poor surface quality, and subsurface damage, which may grow into a spontaneous fracture during machining. Pulsed-laser systems can produce enough energy, which is focused onto a spot to ablate even the hardest materials. However, if the pulses are not extremely short, they often cause surface deterioration such as a heat-affected zone due to thermal effects and microcracks. If composite materials are ablated, a different chemical composition may be left on the surface behind. There also exist limitations on forming processes prior to sintering ceramics, which restrict generation of complex geometries and make it difficult to ensure tight tolerances on dimensions and good surface finish and minimum subsurface damage at reasonable cost.

In the following sections, we will review the requirements for ultrasonic machining and report on our finite element modeling of the essential part of the USM machine, i.e., the different elements of the acoustic system to optimize the micromachining process on a large area. We will also discuss the main process parameters influencing the tool wear and the machining quality of the workpiece as well as show a few examples of our work.

2 Ultrasonic machining

2.1 Background

The MUSM technique exploits the tool (or microtool) vibrations at the ultrasonic frequency to force abrasive grains of a slurry (generally water-based) atop the workpiece to hit the workpiece material and erode its surface.

The tool is defined as either the terminal part of the sonotrode or a machined part attached to the sonotrode. Figure 1 shows the main elements of the acoustical system of a USM machine consisting of piezoelectric transducers,

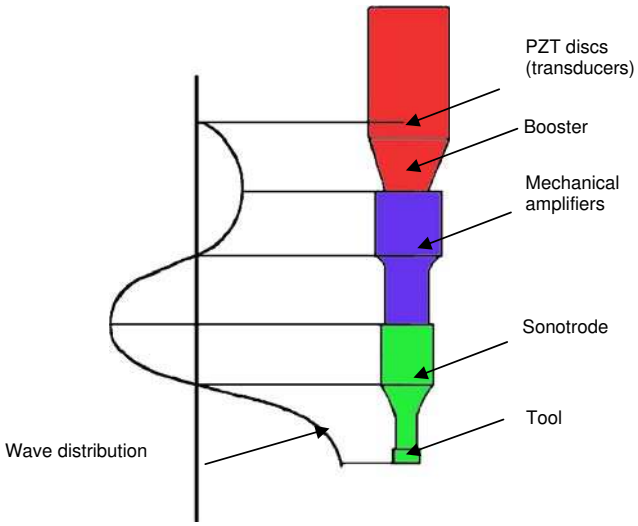

Fig. 1 Longitudinal wave in the acoustical system

booster and amplifiers, and finally a horn or sonotrode ending by the tool part. Ultrasonic machining involves generally the use of high hardness tool materials such as hardened steel or tungsten carbide to minimize tool wear.

Therefore, the ultrasonic machining results from the conversion of high-frequency electrical energy into mechanical longitudinal motion (or vibrations), which is transmitted via a booster to the cutting tool and the slurry fed between the tool and the machined workpiece. Vibrating generally at about 20 kHz (and sometimes at 35 kHz or at twice the frequency), the tool is fed into the workpiece under a constant static load and accelerates the abrasive particles against the workpiece surface at high velocity, causing them to gently and uniformly wear away the workpiece material by microchipping, leaving a precise reverse form of the sonotrode shape. The mechanisms underlying the microchipping action in ultrasonic machining have been identified to be mainly localized hammering and free impact by abrasive grains in the slurry. Cavitation can also occur and is the significant contributor to material removal on porous materials like graphite as opposed to hardened steels or ceramics (for more details, see for example, [17] and [12]). Sometimes, it is possible to help the mechanical erosion due to the grains by the choice of an aggressive slurry medium inducing chemical effects accompanying the hammering process (e.g., [18]).

To transfer a maximum energy to the end of the tool, the acoustical system should possess a high mechanical quality factor Q (qualifying the transfer of electrical energy into mechanical one through the piezoelectric properties of the transducer) and a high fatigue resistance and a good attachment to the machine to avoid damping and propagation of the ultrasonic vibration in the structure of the machine.

Two different machining modes exist to remove material by ultrasonic machining in the workpiece:

1. The most used mode, in drilling or die sinking configurations, consists of transferring the tool pattern into the substrate in one single step once the tool has been produced. In this case, the tool wear impacts directly on the accuracy of the cutting process (see section on "Tool wear"). In rotary ultrasonic machining, the tool can be rotated to machine axially symmetric holes with a better surface finish. However, the basic stationary configuration allows the machining of a much wider variety of shapes.
2. Another possible machining mode is contouring, for which the tool (a simple needle) is displaced along the contour of the hole. Here, the tool wear can be taken into account in the software generating the displacement of the workpiece.

2.2 Process parameters and modeling

To describe this process, we present below an example indicating the kinetic energy (E in nanojoules) transmitted to a grain of about 15 μm diameter and 30 ng mass (m: mass in grams) accelerated by a tool working at a frequency of 20 kHz and with a longitudinal amplitude of 25 μm:

$$E = \frac{1}{2} m.v^2 = 0.1 \text{ nJ}$$

In this case, the velocity (v in meters per second) and the acceleration, which the grain will reach are, respectively, ≈3 m/s and 30,000×g (g: ground acceleration, i.e., the acceleration due to earth gravity).

As slurry medium, we use water due to its good property for transferring ultrasonic waves. The tool is excited by a power generator, which applies high voltage to the piezoelectric transducer composed by one, two, or three pairs of PZT pre-stressed disks. The sonotrode tip(tool) vibrates at the ultrasonic resonant frequency (generally 20 kHz). By the inverse piezoelectric effect, the voltage (a few hundreds of volts) applied on the faces of the disks produces a thickness variation transmitted to the end of the sonotrode by means of conical and bi-cylindrical mechanical amplifiers (preferably in titanium), linking rigidly the transducer to the machine (see Figs. 1 and 2). The length of each mechanical amplifier needs to respect the boundary conditions and depends on the resonant frequency (f) and the properties of the used material (E, ρ), that is, $\lambda = \frac{1}{f} \cdot \sqrt{\frac{E}{\rho}}$ and the length of each part (amplifiers and sonotrode) has to be equal to $\lambda/2$. Hocheng et al. [19] show the strong correlation between the tool length and the resonant frequency.

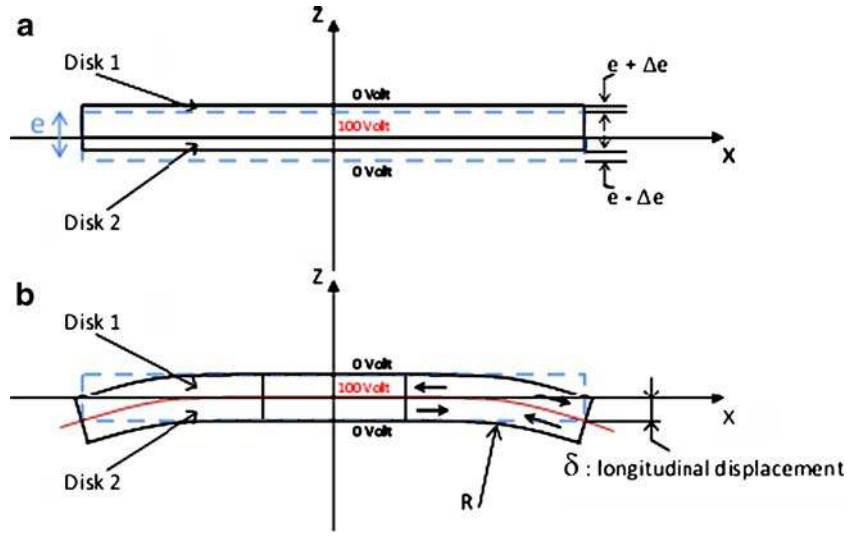

Fig. 2 **a** and **b** Thickness variations $\Delta h = d_{33}.\ U$ and $\delta = 3/4.d_{31}.\ U.(l/h)^2$, where d_{33} and d_{31} are the piezoelectric coefficients of the PZT disk and l and h its radius and thickness, respectively

Voltage in phase opposition applied to the piezoelectric Z-cut PZT disks induces "breathing" of the disks along the Z axis: one disk (disk 1) contracts while the other one (disk 2) expands. This produces simultaneously a variation of thickness of the disks, Δh as indicated in Fig. 2a, accompanied by a variation of radius of the disk: when The thickness of the disk increases, its radius decreases. As both disks are in phase opposition, the increase of thickness of one disk is counterbalanced by the decrease of thickness of the other disk. Furthermore, as both disks are strongly linked together, the decrease or the increase of the radius of the lower disk leads to a bending of the disk assembly with respect to the Z plane downward or upward, respectively (deflection denoted as δ in Fig. 2b).

To illustrate the comparative values of the sinusoidal thickness variation induced by the power supply (typically a few hundred volts), we have calculated Δh and δ for various PZT materials used as a pair of circular transducers. As we can see in Table 1, the bending effect δ is more efficient than the stretching Δh to create the longitudinal waves in the sonotrode (Fig. 1). For our machine (Fig. 3), the amplification ratio at the end of the sonotrode is a little more than 9 due to its bi-cylindrical shape resulting in maximum amplitude of vibration of 25–30 μm with a power supply of 700 W. In some machines, the power supply can reach 3 to 4 kW to induce a displacement larger than 100 μm. This vibration amplitude value obtained at a few tens of kilohertz transfers a very high level of energy to the grains of abrasive and enables them to tear off small bits of workpiece material of volume similar to that of the abrasive grain. We mean here that the hammering process cannot be efficient on softer materials such as metal or alloy because the grains remain stuck in the matter of the workpiece.

Furthermore, the choice of the material for the transducers depends also on other properties such as:

- Curie temperature, which has to be high to avoid the depolarization of the material during machining
- dielectric permittivity, which has to stay low

Finally and up to now, the maximum area that can be machined in a single step is within a circle of about 1 in. diameter, allowing to keep an amplification ratio close to 10. But, research in machine development is also conducted. It consists in developing first a new and smaller machine with a sonotrode that will function at higher frequency, 35 kHz instead of 20 kHz and second, a tool with a working surface reaching 3 and 4 in. diameter (a first step with a working surface of 2 in. diameter has been achieved: see below). In each case, we do not need a high amplitude so it is not necessary to design a sonotrode, allowing mechanical amplification. Indeed, even if the shape of the tool tends to decrease the amplitude of the vibration, the energy of the grains will be sufficient to

Table 1 Numerical application for various PZT materials

Material	d_{31} (10^{-12} m/V)	d_{33} (10^{-12} m/V)	δ (μm)	Δh (μm)	$\delta/\Delta h$
PZT5A	171	374	0.125	0.037	3.35
PZT5H	274	593	0.200	0.059	3.40
P1 94	305	640	0.223	0.064	3.45
P1 89	108	240	0.079	0.024	3.30
P7 62	130	300	0.095	0.030	3.15

U=100 V, l=18.75 mm, h=6 mm

Fig. 3 Machine developed at the Institute FEMTO-ST

create small holes in silicon, glass, or ceramics, generally used for MEMS. The definition of the complete acoustical system with a piezoelectric transducer operating at 20 kHz was computed using finite element analysis and validated with the existing ultrasonic machine. The following table (Table 2) gives examples of calculations made on the complete acoustical system with different types of elements of a finite elements modeling and compares the amplification ratios and resonant frequencies calculated with different elements and integrating the piezoelectric behavior for the last one. These results were obtained with ANSYS software.

In our model, we have introduced a damping coefficient, which was fixed at 2×10^{-9}. We have chosen this value as a mean damping value of the different parts of the entire acoustic system, which gives a slightly damped and quite large resonance peak (at 20 kHz), allowing a reasonable computation time of harmonic finite element analysis (FEM) studies.

So, for the three potentially usable materials, we have performed a harmonic analysis to determine the influence of each PZT on the resonant frequency, the amplitude of the longitudinal displacement at the end of the sonotrode, and the mechanical quality factor Q (explained in Section 2.1). These results are summarized in Table 3.

So, without contest, the best material to build transducers for acoustical system in ultrasonic machine is the PZT5A, followed by the PZT7 62. The first one is considered as "soft". It means that it is doped by "electron donors" and, consequently, can be easily depolarized. The "hard" ones are, unlike the former ones, doped by "electron acceptors" and are utilized in the manufacture of high voltage suppliers.

Moreover, we have developed a customized specific model, allowing us to calculate the shape of any sonotrode optimized for a given work.

3 Tool wear

The grains hit the tip of the vibrating tool and tend to erode it. So, tool wear is an important variable for micro-USM, affecting the machining speed and the hole accuracy. It depends on several parameters such as:

- the tool (which is namely the bottom of the sonotrode) material and particularly its possible treatment to harden it,
- the workpiece material
- the static load of the tool (linked to the acoustic unit) on the blanket of abrasive grains
- the amplitude of vibration (which is a linear function of the electric power supplied to the transducer)
- and to a lesser extent the nature and the dimension of particles

Indeed, tool wear tends to increase when harder and coarser abrasive grains are used.

Here, we will detail just the effect of the static load on the machining speed (for more information, see [20]). Our example concerns tool wear during machining of glass. Similar experiments are conducted in our lab, focusing on the tool wear and not on the machining speed.

Measurements of tool wear as a function of static load were performed on Pyrex glass using a circular steel tool

Table 2 Examples of results obtained with ANSYS software

	Vibration mode	F (Hz)	Amplification ratio
Theoretical study	–	–	9.27
FEM with 3D elements	3rd long	20,156	9.24
2D axisymmetric model	3rd long	20,062	9.28
same with piezoelectricity	3rd long	20,207	9.40

Table 3 Results of the harmonic study

Material	Displacement amplitude (μm)	Resonant frequency (Hz)	*Q* factor
PZT5A	1	20,183	5,300
P1 89	0.01	20,318	3,400
P7 62	0.5	20,218	4,000

with a diameter of 6 mm. The realization of 200-μm-deep non-through holes induces a wear of approximately:

- 1 μm/hole when using a static load of 6 N and 9 μm abrasive grains (mesh 600)
- 2 μm/hole when using a static load of 6 N and 17 μm abrasive grains (mesh 400)
- and 0.3 μm/hole when using a static load of 3 N and 17 μm abrasive grains (mesh 400)

The lower the static load, the smaller is the wear, down to a value for which the erosion becomes negligible. The influence of static load is dominant, which would require its tight in situ control during machining. For tools with a small cross-sectional area, the adjustment of this static load for optimum machining becomes more critical especially if we have to machine holes with diameters of a few hundreds of micrometers. The dimension of abrasive grains, though less influential, also contributes to the wear, with an increase of erosion rate with bigger grain sizes (see Fig. 4, presenting erosion rates for three different grain sizes [21]). And, similar to the existence of a maximum erosion rate of the workpiece at a given static load, we observe also an optimum in the tool erosion rate, i.e., as small an erosion rate as possible. We have to note here that the flat at the bottom of a non-through hole is not so flat due to the inhomogeneous slurry distribution across the machining face, resulting in fewer active grits at the tool center, inducing also inhomogeneity in the tool wear [4]. If the wear affects mainly the length of the tool, it is also possible that the abrasive grain modifies its shape introducing a certain amount of conicity in the hole, especially if it is deep (with a great aspect ratio). Fortunately, as we will see below, conicity can be reduced down to becoming negligible, by using tungsten carbide or stainless steel as tool material.

The manufacture of hole diameter in the hundred-micrometer range, which is our target, induces a much larger tool wear than for holes in the millimeter-diameter range. However, micro-USM remains a competitive micromachining technique because it allows the production of multiple microstructures in parallel using a tool matrix instead of a single structure at the time as produced in direct mechanical milling with carbide or diamond drills.

When tools of very small dimensions are used, the static load needs to be small to avoid breakage of the tool. For example, a load between 50 and 100 g for a tool with 65 μm diameter or a load of 10 g for a 20-μm^2 square tool seems to be the best values [22].

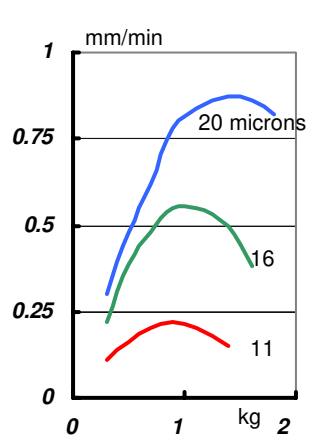

Fig. 4 Machining of glass: erosion rate as a function of static load (after [21])

4 Materials and process capabilities

Hard and brittle materials, in particular non-conductive substrates, can be machined using this technique. The present machine was developed for producing electronic components based on piezoelectric quartz crystals. Indeed, this process is efficient because it generates neither a temperature gradient nor mechanical stress in the crystal, and it preserves the surface integrity of the specimen [20]. It was extended easily to less hard materials such as glass or

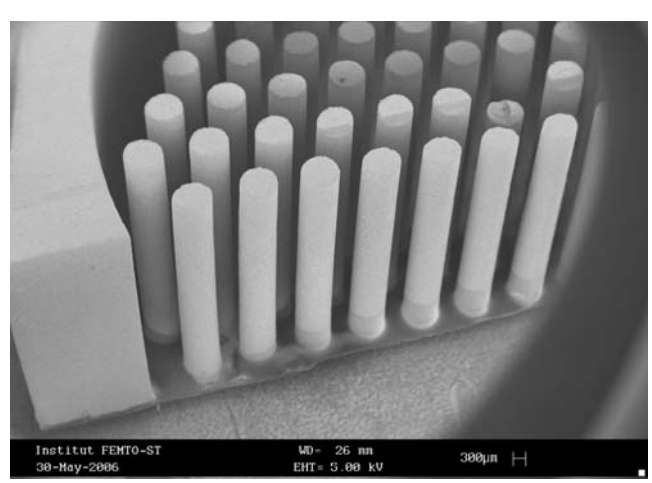

Fig. 5 Example of ultrasonically machined microstructures: 2D matrix in PZT with cylinders of 280 μm diameter and 6,000 μm depth

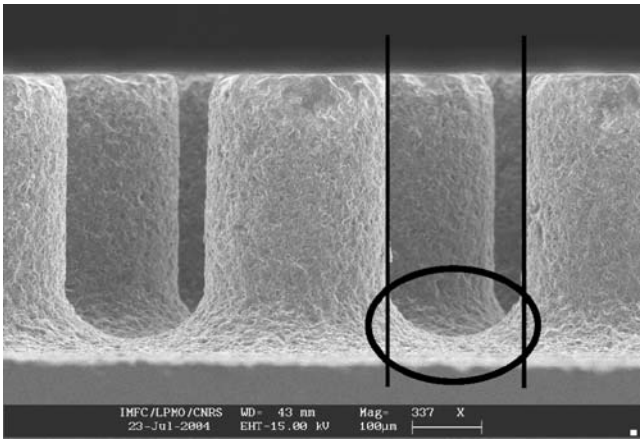

Fig. 6 Arrays of PZT USM machined with a steel sonotrode. *H* 600 µm, *D* 300 µm, aspect ratio 2

Pyrex, silicon, and polycrystalline piezoelectric ceramics. In contrast, it needed to be adapted for harder materials such as sapphire using harder abrasive grains with more cutting power (natural diamond instead of silicon carbide) at the expense of an important reduction in machining speed.

Whereas through holes of high quality were easily produced, non-through holes were also machined with a depth accuracy within 10 µm (anti-mesa) [1, 23]. However, their surface smoothness was generally not as good and not sufficient for applications using very-high-frequency resonators (around a few hundred megahertz). Any 2D pattern of 5-cm^2 maximum area can be transferred within the bulk material, and the pattern stepped and repeated on the substrate. At present, within a 500-µm-thick substrate of hardness similar to that of quartz crystal, the minimum feature size of a through hole is 120 µm, corresponding to an aspect ratio of 4, with a negligible conicity. An example

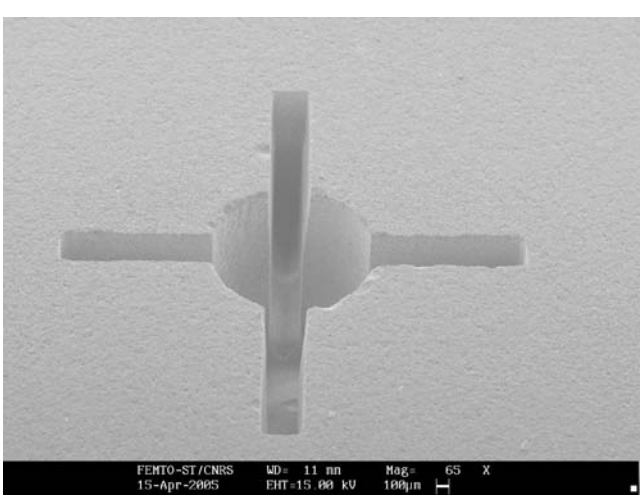

Fig. 7 SEM picture of channels formed into borosilicate glass by MUSM with a steel tool: depth 1,900 µm, width of the trench 300 µm (aspect ratio >6), abrasive grain size 5 µm

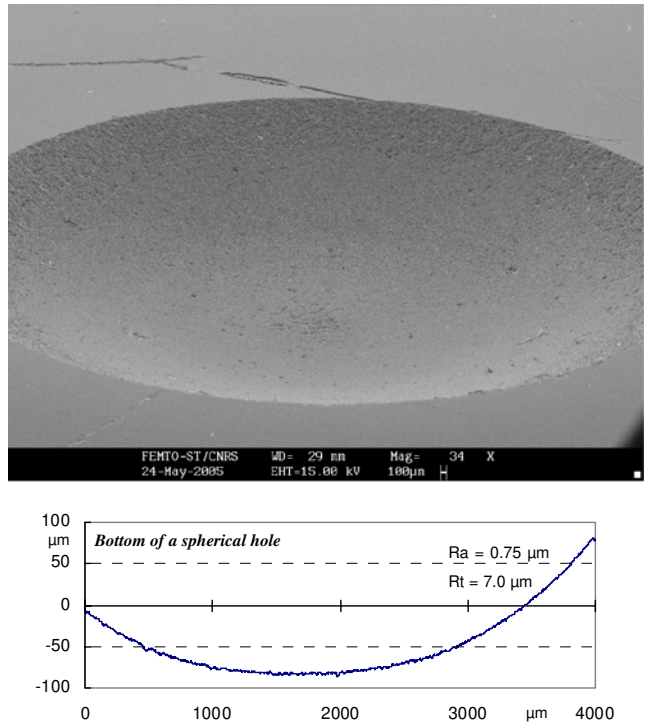

Fig. 8 Spherical cavity in silicon and characterization of its surface roughness

of such machining in silicon is shown in Fig. 5. An aspect ratio of 10 can be obtained with larger holes with some conicity (12 µm/mm, i.e., less than 1°), which is still acceptable compared to other techniques such as LIGA known for producing very straight walls. Rotation of the tool would improve the roundness and surface quality of the circular holes.

All the above-mentioned structures have been machined using tools produced by conventional techniques (EDM, drilling, etc.). These tools wear relatively slowly (as indicated in the previous paragraph). We are now exploring machining with tools produced by a number of lithography-based high-aspect ratio microtechniques (LIGA, DRIE).

Fig. 9 Model of the 2-in. diameter sonotrode

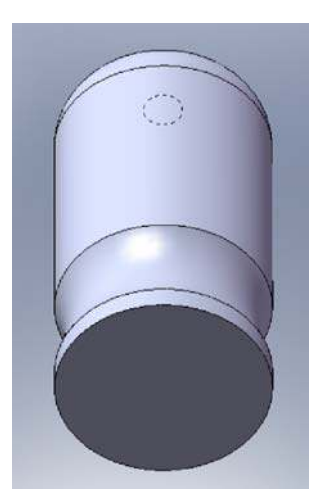

Figures 5 and 6 illustrate arrays of pillars in PZT, which were produced using a steel disk with an array of 300-µm-diameter holes (honeycomb structure). The granular aspect of the sidewalls is characteristic of material removal via the erosion of the workpiece due to abrasive grains. The curved bottom is due to the inhomogeneous wear of the sonotrode the edges, of which became rounded. Nevertheless, the sidewalls of the pillars are vertical on most of the height, up to 6 mm for silicon.

Microstructures with much smoother sidewalls can be obtained using much finer grains, with a diameter ranging between 3 and 5 µm, and applying a low static load, as can be seen in Fig. 7. In this case, the erosion rate is very low but the quality of the machining is improved.

The coarser the abrasive grains, the higher the surface roughness and the higher the erosion rate. So, to obtain finer roughness, we have to select fine abrasive grit size. As indicated in Fig. 8, we measured the roughness at the bottom of a spherical cavity by a Perthen profilometer, the vertical resolution of which is on the order of 20 nm. The arithmetic roughness (Ra) was smaller than 1 µm and the peak-to-peak roughness (Rt) value less than 7 µm, which compares well with values obtained on wet chemically etched surfaces.

5 Development of 2-in. sonotrodes

Before designing sonotrodes able to machine working areas of a 4-in. wafers in a single step, we have defined a 2-in. sonotrode. We developed a model of harmonic analysis aimed at calculating the resonance frequencies and the amplitude of vibration of the complete acoustic system based on the finite elements method. Using this model, we have defined a new sonotrode for which the working surface is circular with a diameter of 2 in. Figure 9 presents the shape of the sonotrode calculated by FEM. The values of the longitudinal displacement are almost uniform (the calculated difference on the displacements between the center and the side is just of the order of 10 nm). This sonotrode, which does not amplify the displacement from the top to the bottom, allows nevertheless the machining of very dense microstructure on its entire surface. We are very confident to repeat this "collective" machining on larger wafers with diameters up to 4 in.

6 Conclusion and perspective

As we see here, the USM "old technique" can be used to realize new applications in microsystems. One of the advantages of the microultrasonic machining comes from the simplicity of transferring the pattern into the substrate in one single step once the tool has been produced, even if it presents various heights for multi-level complex structures.

Another advantage of MUSM is that it is not material dependent and can be used, for example, to machine microchannels in glass for microfluidic applications or microsensors with output frequency in quartz crystal.

We have demonstrated that a set of well-adapted parameters such as the static load value or grain size enables micromachining microstructures (including micro-holes) with very acceptable roughness and negligible conicity. Moreover, we are able to model, design, and manufacture sonotrodes, which can be adapted to a tabletop-sized ultrasonic micromachining machine for small, light-weight workpieces up to 2-in. diameter. Future developments concern the following:

- optimization of the tool material to decrease drastically the wear, which can limit this application when the shape of the steel tool is difficult to pattern, hence becomes too expensive (in particular, we study the efficiency of tools in polycarbonate easily realized by molding)
- realization of tool with a larger working surface defined by finite element modeling adapted to glass or silicon wafers with diameter of 3 or 4 in.
- improvement of the roughness of the walls and of the bottom of the non-through hole by a good choice of more or less coarse abrasive grain size

References

1. Komaraiah M, Manan MA, Reddy PN, Victor S (1988) Investigation of surface roughness and accuracy in ultrasonic machining. Precis Eng 10(N2):59–65
2. Komaraiah M, Reddy N (1993) A study on the influence of workpiece properties in ultrasonic machining. Int J Mach Tools Manuf 33(N3):495–505
3. Komaraiah M, Reddy N (1993) Relative performance of tool materials in ultrasonic machining. Wear 161:l–10
4. Thoe TB, Aspinwall DK, Wise MLH (1998) Review on ultrasonic machining. Inter Jour Mach Tools Manufact 38(N4):239–255
5. Pei ZJ, Ferreira PM (1998) Modeling of ductile-mode material removal in rotary ultrasonic machining. International Journal of Machine & Manufacture 38:1399–1418
6. Markov IA (1966) Machining of intractable materials with ultrasonic and sonic vibrations. Illiffe Books, London
7. Klocke F, Dambon O, Capudi Filho GG (2005) Influence of the polishing process on the near-surface zone of hardened and unhardened steel. Wear 258:1794–1803
8. Guzzo PL, Raslan AA, De Mello JDB (2003) Ultrasonic abrasion of quartz crystals. Wear 255:67–77
9. Jianxin D, Taichiu L (2002) Ultrasonic machining of alumina-based ceramic composites. J Eur Ceram Soc 22:1235–1241
10. Singh R, Khamba JS (2006) Ultrasonic machining of titanium and its alloys: a review. J Mater Process Technol 173:125–135
11. Yamni K, Boy JJ, Yacoubi A (2001) Temperature effect on the ferrobielastic behaviour of the quartz crystal. Annales de Chimie et Sciences des Matériaux 26:19–22

12. Ichida Y, Sato R, Morimoto Y, Kobayashi K (2005) Material removal mechanisms in non-contact ultrasonic abrasive machining. Wear 258:107–114
13. Curodeau A, Guay J, Rodrigue D et al (2008) Ultrasonic abrasive m-machining with thermoplastic tooling. Int J Mach Tools Manuf 48:1553–1561
14. Thoe TB, Aspinwall DK, Killey N (1999) Combined ultrasonic and electrical discharge machining of ceramic coated nickel alloy. J Mater Process Technol 92–93:323–328
15. Yan BH, Wang AC, Huang CY, Huang FY (2002) Study of precision micro-holes in borosilicate glass using microEDM combined with micro ultrasonic vibration machining. Int J Mach Tools Manuf 42:1105–1112
16. Wansheng Z, Zhenlong W, Schichun D et al (2002) Ultrasonic and electric discharge machining to deep and small hole on titanium alloy. J Mater Process Technol 120:101–106
17. Soundararajan VSV, Radhakrishnan V (1986) An experimental investigation on the basic mechanisms involved in ultrasonic machining. Int J Mach Tool Des Res 26(3):307–321
18. Choi JP, Jeon BH, Kim BH (2007) Chemical-assisted ultrasonic machining of glass. J Mater Process Technol 191:153–156
19. Hocheng H, Kuo KL (2002) On-line tool wear monitoring during ultrasonic machining using tool resonance frequency. J Mater Process Technol 123:80–84
20. Andrey E, Boy JJ, Khan Malek C (2005) Tool wear for micro-ultrasonic machining (MUSM). 5th Int. Conf. European Society for precision Engineering and Nanotechnology, Montpellier, France, May 8–11 2005, Proc. EUSPEN 05: 345–34
21. Rozenberg LD (ed) (1973) Physical principles of ultrasonics technology. Ultrasonic cutting vol 1. Plenum, New
22. Egashira K, Masuzawa T, Fujino M, Sun X-Q (1997) Application of USM to micromachining by on-the-machine tool fabrication. International Journal of Electrical Machining 2:31–36
23. Dam H, Quist P, Schreiber MP (1995) Productivity, surface quality, and tolerances in ultrasonic machining of ceramics. J Mater Process Technol 51:358–368