HAL
open science

Experimental results on adaptative MMSE turbo equalization in shallow underwater acoustic communication

Christophe Laot, P. Coince

To cite this version:

Christophe Laot, P. Coince. Experimental results on adaptative MMSE turbo equalization in shallow underwater acoustic communication. Oceans'10, May 2010, Sydney, Australia. hal-00609264

HAL Id: hal-00609264

https://hal.science/hal-00609264v1

Submitted on 10 Jun 2021

HAL is a multi-disciplinary open access archive for the deposit and dissemination of scientific research documents, whether they are published or not. The documents may come from teaching and research institutions in France or abroad, or from public or private research centers.

L'archive ouverte pluridisciplinaire **HAL**, est destinée au dépôt et à la diffusion de documents scientifiques de niveau recherche, publiés ou non, émanant des établissements d'enseignement et de recherche français ou étrangers, des laboratoires publics ou privés.

Experimental results on adaptive MMSE turbo equalization in shallow underwater acoustic communication

Christophe Laot* and Pascal Coince†
* Institut TELECOM ; TELECOM Bretagne ; LabSTICC CNRS UMR 3192,
Université européenne de Bretagne,
Technopole Brest-Iroise - CS 83818 - 29238 Brest Cedex 3, France
Email: christophe.laot@telecom-bretagne.eu
†SERCEL, Division Acoustique Sous-Marine, ZI de Kergonan, 29200 Brest, France
Email: pascal.coince@sercel.fr

***Abstract*— This paper presents some new results on MMSE turbo equalization applied to real sea water trials in the Atlantic ocean. High data rate QPSK communications (2 to 7 kbps) have been tested. The receiver includes timing recovery, equalization, interleaving and channel coding. The results which are evaluated in term of BER and MSE show that turbo equalization improves the performance of the receiver.**

I. Introduction

Wireless information transmissions through the ocean need reliable underwater acoustic communications. One of the numerous applications of the underwater communication is to provide a high data rate link between an autonomous underwater vehicle (AUV) and a surface vessel. Since, GESMA (Groupe d'Etudes Sous-Marines de l'Atlantique, Brest, France), in collaboration with Telecom Bretagne and SERCEL, developed an acoustic link, called TRIDENT [1]. This system was designed for text, images and speech data transmission in a shallow water environment.

The technical specifications of the TRIDENT system are the following. In order to maximize the spectral efficiency of the transmission a single carrier scheme and a continuous transmission model was designed. This scheme avoid the spectral efficiency loss due to the insertion of guard interval or cyclic prefix as required in a classical OFDM scheme. In order minimize the use of training sequences, blind or decision directed algorithms are used to track the time-varying channel.

When platforms are moving, high data rate communication over a distance up to the kilometer induces a low signal to noise ratio (SNR) at the receiver side. Multiple antennas were considered at the receiver side and single input multiple output (SIMO) equalization was designed to improve the receiver performance. An efficient timing recovery scheme was developed to compensate for the Doppler effect induced by the moving platforms. Channel coding was integrated in the transmission scheme to increase the robustness of the transmission. Nevertheless, when the received SNR is too low, the classical transmission scheme fails and the transmission is unreliable.

Minimum mean square error (MMSE) turbo equalization [2]–[4] has proven to be effective for removing intersymbol interference and improve the performance of the receiver in low SNR situations. It consists of a MMSE equalizer and a decoder which exchange soft information in an iterative process. In a turbo equalizer, the equalizer benefits from channel decoder gain thanks to an iterative process applied to the same data block. The MMSE turbo equalization was already proposed in UWA communications [5]–[8]. This papers gives additional results on the performance of turbo equalization on real sea trials.

II. System model

This paper proposes a SIMO adaptive MMSE turbo equalization scheme for an all-digital single carrier receiver in a time-varying channel environment. The receiver has a chain of $N_R = 4$ antennas. The information data providing by the source are scrambled to present pseudo-random statistics. Long burst transmission results on the concatenation of binary encoded data blocks.

A rate R_c convolutional code is fed by a block of independent binary data α_n taking the values 0 or 1 with the same probability. An interleaver Π is fed by the coded data $c_{n,i}$ and provides interleaved coded data $c_{k,i}$. Each set of $m = log_2(M)$ coded data $c_{k,i}$ is associated with M-ary complex symbol d_k by a Gray mapping.

Let $s(t)$ be the transmitted waveform of the QPSK signal:

$$s(t) = \Re e\{ \sum_{n=-\infty}^{+\infty} d_k g(t - kT) e^{j(2\pi f_c t + \psi)} \} \qquad (1)$$

where f_c is the carrier frequency, ψ is the carrier phase uncertainty, $1/T$ is the symbol rate with T the symbol duration, $\{d_k\}$ are the transmitted symbols with variance σ_d^2 and $g(t)$ is a pulse-shaping filter.

This work was supported in part by GESMA/DGA, France.

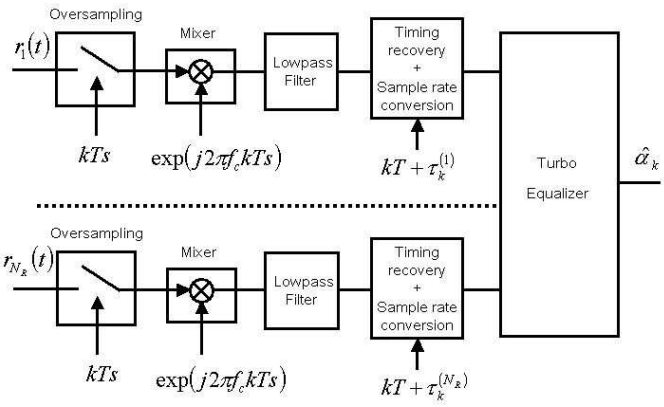

Fig. 1. All-digital receiver

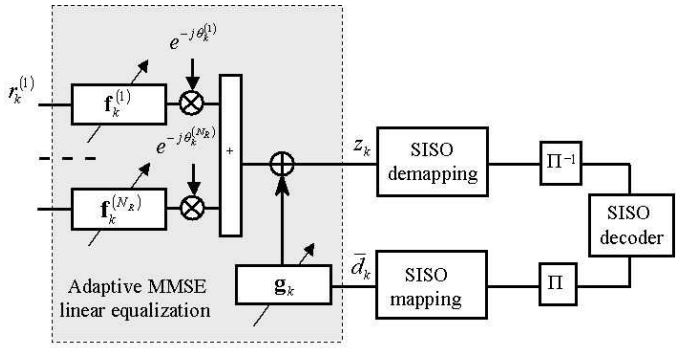

Fig. 2. SIMO turbo-equalizer

When the pass-band digital received signal is centered on a relatively low carrier frequency, an all-digital receiver can be performed [9]. Since the received signal is band-limited, an oversampling is performed at the rate $1/T_s$ where T_s is chosen to respect the sampling theorem. The down-conversion is performed digitally and the optimum sampling is realized from a sample rate converter. The resulting all-digital receiver is depicted in figure 1.

In wide-band transmission, as it is the case in underwater acoustic communications [10], [11], the Doppler effect introduces a scaling of the symbol period and must be taken into account in the design of the timing recovery scheme [12], [13]. To restore the transmitted signal, the optimum sample time depends not only on the propagation delay at the antenna $j; j = 1, \ldots, N_R$ but also on a common Doppler shift function on the relative speed of the platforms and the propagation wave velocity [12], [13]. Because the receiver is all-digital, the optimum sampling value $kT + \tau_k^{(j)}$ does not necessary concur with a value of kT_s and it will be needed to proceed to a sample rate conversion. The sample rate conversion uses interpolation, filtering and decimation [9].

At the receiver side, the optimum sampling time is unknown and must be estimated. Initial compensation of common doppler shift is performed on the estimation on the relative velocity measured using a short preamble [14] transmitted at the beginning of the transmission. Note that the preamble is also used to realized the transmission detection and frame synchronization. Then, an NDA timing recovery tracking scheme is designed which takes into account the residual Doppler shift due to the moving platforms and the different channel delays on each antenna [15], [16].

After demodulation, sampling, Doppler compensation, timing recovery, the received signal is modeled by a SIMO discrete time channel where each output $j; j = 1, ..., N_R$ is corrupted by an additive, zero-mean, white Gaussian noise (AWGN) $w_k^{(j)}$ with variance $\sigma^2_{(j)}$. The receiver antenna j observes the input $r_k^{(j)}$

$$r_k^{(j)} = \sum_{l=0}^{L^{(j)}} h_{k,l}^{(j)} d_{k-l} + w_k^{(j)} \tag{2}$$

where $h_{k,l}^{(j)}$ are the $L^{(j)}+1$ coefficients of the multi-path time-varying channel seen at the antenna j at the time kT.

III. SIMO Turbo-equalization principle

In turbo equalization, the equalization and the channel decoding are jointly performed in an iterative way. Each iteration p is carried out by a module fed in by both received signal samples $r_k^{(j)}$ and estimated data $\bar{d}_k$ originating from the module p-1. As depicted in figure 2, each module consists of an multiple-input equalizer, a soft input soft output (SISO) demapper, a deinterleaver Π^{-1}, a SISO binary decoder, an interleaver Π and a SISO mapper. Each module p delivers an estimate of the symbol d_k, called $\bar{d}_k$, to be used by the equalizer of the module $p+1$.

A. SISO mapping

Transmitted symbols are unknown at the receiver side, but it is possible to get an estimated soft value from log likelihood ratio (LLR) on the coded bits provided by the SISO channel decoder of the previous module. This paragraph proposes a solution to produce an M-ary symbol from the binary SISO decoder.

This operation involves calculating the soft estimate $\bar{d}_k$, defined as the mathematical expectation of symbol d_k and given by $\bar{d}_k = \sum_M d \times P_a(d_k = d)$. The sum here concerns all of the discrete symbols d in the constellation. The term $P_a(d_k = d)$ denotes the *a priori* probability and depends on probability of the encoded bits $c_{k,i}; i = 1, \ldots, log_2(M)$ making up symbol d_k. When the encoded bits are statistically independent, it is possible to write:

$$P_a(d_k) = \prod_1^m P_a(c_{k,i}) \tag{3}$$

where binary element $c_{k,i}$ takes the value 0 or 1 according to the considered symbol d_k and the mapping rule. On the other

hand, it can be shown that the *a priori* probability and the *a priori* LLR are linked by the following relation:

$$P_a(c_{k,i}) = \frac{1}{2}\left(1 + (2c_{k,i} - 1)\tanh\left(\frac{L_a(c_{k,i})}{2}\right)\right) \quad (4)$$

where $L_a(c_{k,i})$ defines *a priori* information on the encoded bits $c_{k,i}$ coming from the channel decoder.

B. Adaptive multiple-input equalizer structure

The structure of the equalizer is depicted figure 2. The multiple-input equalizer combines the outputs of the feedforward transversal filters fed by the SIMO channel. Second order phase lock loops (PLL) are optimized jointly to the equalizer filters in order to compensate residual frequency offsets. When *a priori* information are available from the channel decoder of a previous iteration, intersymbol interference at the combiner output is suppressed by the output of a feedback filter fed in by the estimated symbols $\bar{d}_k$.

The filter coefficients of the equalizer are optimized so as to minimize the mean square error $E\{|z_k - d_{k-\Delta}|^2\}$ between the equalized symbol z_k at instant k and symbol $d_{k-\Delta}$ transmitted at instant $k - \Delta$. The introduction of a delay Δ enables the anti-causality of the solution to be taken into account.

An adaptive procedure is used to obtain the filters coefficients [2]. This adaptive algorithm is composed of two distinct phases: the training phase and the tracking phase. The training phase makes use of sequences known by the receiver (data-aided (DA)) to initialize the equalizer coefficients. Next, during the tracking period, the coefficients are continuously updated in a decision-directed (DD) manner, based on the receiver estimate of the transmitted sequence. Alternative to the DD algorithm makes use of blind algorithms when signal to noise ratio is too low.

Adaptive algorithms involve determining, for each symbol entering the equalizer, output z_k from the following relation:

$$z_k = (\mathbf{f}_k^{(j)})^T \mathbf{r}_k^{(j)} e^{-j\theta_k^{(j)}} - \mathbf{g}_i^T \tilde{\mathbf{d}}_k \quad (5)$$

where $\tilde{\mathbf{d}}_k = \left(\bar{d}_{k+G}, \ldots, \bar{d}_{k-\Delta+1}, 0, \bar{d}_{k-\Delta-1}, \ldots, \bar{d}_{k-G}\right)^T$ is the vector of estimated symbols and $\mathbf{r}^{(j)}{}_k = \left(r_{k+F}^{(j)}, \ldots, r_{k-F}^{(j)}\right)^T$ is the vector of channel output samples, with respective lengths $2F + 1$ and $2G + 1$. Note that the coordinate relative to the soft estimate $\bar{d}_{k-\Delta}$ in $\tilde{\mathbf{d}}_k$ is set to zero in order not to cancel the signal of interest. Vectors $\mathbf{f}_k^{(j)} = \left(f_{k+F}^{(j)}, \ldots, f_{k-F}^{(j)}\right)^T$ and $\mathbf{g}_k = (g_{k+G}, \ldots, g_{k-G})^T$ represent the coefficients of filters $\mathbf{f}^{(j)}$ and $\mathbf{g}$, respectively. Both vectors are a function of time since they are updated at each new received symbol.

The relations used to update the vectors of the coefficients can be obtained from a least-mean square (LMS-DA) gradient algorithm:

$$\begin{aligned} \mathbf{f}_{k+1}^{(j)} &= \mathbf{f}_k^{(j)} - \mu\,(z_k - d_{k-\Delta})\,(\mathbf{r}_k^{(j)} e^{-j\theta_k^{(j)}})^* \\ \mathbf{g}_{k+1} &= \mathbf{g}_k + \mu\,(z_k - d_{k-\Delta})\,\tilde{\mathbf{d}}_k^* \end{aligned} \quad (6)$$

where μ is a small, positive, step-size that controls the convergence properties of the algorithm.

During the tracking period, the LMS-DA algorithm is replaced by the LMS-DD algorithm where $d_{k-\Delta}$ is replaced by its estimate $\hat{d}_{k-\Delta}$ computed by decision on the equalizer output z_k.

During the first iteration of the turbo equalizer, $\tilde{\mathbf{d}}_k$ is a vector all the components of which are null; the result is that the vector $\mathbf{g}_k$ is also null. The MMSE equalizer then converges adaptively towards an MMSE transversal equalizer. When the estimated data are very reliable and close to the transmitted data, the MMSE equalizer converges towards an ideal (genie) interference canceller, then having the performance of a transmission without intersymbol interference [17].

We have therefore defined an adaptive MMSE turbo equalizer whose coefficients are obtained from a low complexity stochastic gradient descent algorithm, making it possible to track the slow time variations of the transmission channel.

C. SISO demapping

The role of this module is to convert the equalized data z_k into extrinsic LLRs on the interleaved coded bits, which will be then transmitted to the channel decoder. Generally, we can always decompose the expression of z_k as the sum of two quantities:

$$z_k = g_0 d_{k-\Delta} + \nu_k \quad (7)$$

The term $g_0 d_{k-\Delta}$ represents the useful signal up to a constant factor g_0. We recall that this factor quite simply corresponds to the central coefficient of the cascading of the channel with the equalizer. The term ν_k accounts for both residual interference and noise at the output of the equalizer. Using a Gaussian approximation of residual ISI, ν_k follows a complex Gaussian distribution, with zero mean and total variance bounded by $\sigma_\nu^2 = \sigma_d^2 g_0(1 - g_0)$.

When Gray mapping rules are used, the extrinsic information on the coded bits is given by:

$$L_e(c_{k-\Delta,i}) = \ln \frac{\sum\limits_{d_{k-\Delta}|c_{k-\Delta,i}=1} \exp\left(-\frac{|z_k - g_0 d_{k-\Delta}|^2}{\sigma_\nu^2}\right)}{\sum\limits_{d_{k-\Delta}|c_{k-\Delta,i}=0} \exp\left(-\frac{|z_k - g_0 d_{k-\Delta}|^2}{\sigma_\nu^2}\right)} \quad (8)$$

To compute the extrinsic information $L_e(c_{k-\Delta,i})$, we need bias g_0. For a practical experimentation this parameter can be rather difficult to obtain and a good precision on its estimate is often hard to insure. Consequently, in the range of signal to noise ratio considered for our application, a constant factor g_0 has been applied which induces a weak performance loss.

D. SISO channel decoder

The channel decoder is a SISO (Soft Input Soft Output) device which implements the LOG-MAP algorithm. The observations provided by the SISO demapper fed the channel decoder input which delivers soft output decisions on coded data. This soft output decisions fed the SISO mapper in order to provide estimate symbols.

IV. SIMULATION AND EXPERIMENTAL RESULTS

Our simulations emphasize the performance of the MMSE turbo equalizer over real sea trials. Experimental sea trials were carried out the March 2009 in the site "rade de Brest", France, by SERCEL. The aim of these sea trials was to transmit text in real-time from a ship to a quay in a shallow water environment with water depth 15-30 meters. The transmitter was placed on the ship and the receiver on the quay. The antenna array was a vertical chain of $N_R = 4$ hydrophones. A QPSK transmission with carrier frequency 11.5 kHz was used during the trials.

Several scenarios was considered with a transmission over ranges 200-2500m for high data-rates of 1000-3500 coded QPSK symbols per second. Due to the movements of the ship, the velocity speed varies up to 2.5 $m.s^{-1}$. The transmission duration for one trial was approximately of 30 seconds. Each trial results in the concatenation of interleaved coded data blocks of size 4096 bits. A database of 100 trials was collected.

Analysis from these recorded signals have shown that the performance of the receiver was excellent except when the tracking timing recovery algorithm fails. In these cases the scheduling of the information is lost and the bit error rate is 0.5. In the other cases, the transmission was performed without errors because of a signal to noise ratio at the equalizer output greater than 10dB.

Three trials have been retained from the database to present the performance of the adaptive MMSE turbo equalizer. The features of these trials are given in table I. Note that the relative velocity between transmitter and receiver was up to $v = 2.5$ m/s in some of theses trials. This demonstrates the robustness of the receiver and especially the capacity of the timing recovery algorithm to track the optimum sampling time in presence of large doppler shift due to the moving plateform.

TABLE I

FEATURES OF THE REAL SEA TRIALS

Scenario	Trial 1	Trial 2	Trial 3
Symbol Rate (symbol/s)	1150	2875	3830
distance (m)	200	1000	1800
v (m/s)	0.06	2.5	1.9

In order to emphasize on the improvements with the proposed turbo equalizer, we show the behavior of the receiver in terms of decision-directed minimum mean square error (DD-MSE) at the equalizer output versus the iteration number over a duration of 9 seconds at the beginning of the transmission.

The DD-MSE is estimate adaptively by $DDMSE_{k+1} = \lambda DDMSE_k + (1-\lambda)|z_k - \hat{d}_{k-\Delta}|^2$ where $\lambda = 0.99$ is a forgotten factor. As seen in figures 3, 4 and 5 the performance gain between the first iteration and second iteration can be greater than 3dB.

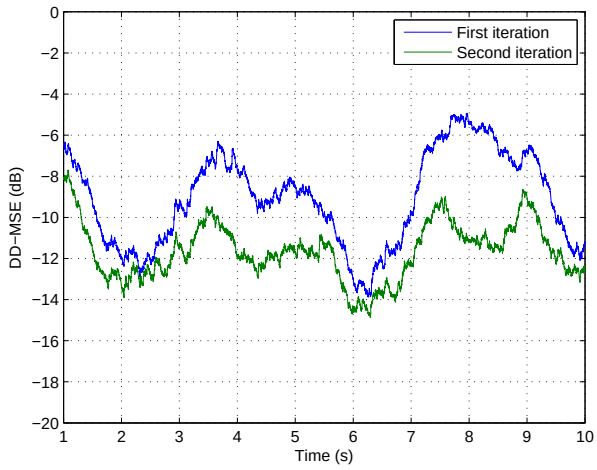

Fig. 3. Trial 1: DD-MSE at the output of the SIMO equalizer, QPSK, 1150 symbol/s, $f_c = 11.5$ kHz, distance=200m, v=0.06m/s

In table II, we give the bit error rate at the input and output of the decoder versus of the iteration. BER was computed on a duration of 30 seconds. The BER at the equalizer output is improved between the first and the second iteration of the turbo equalizer. Since, the SNR is rather high, the BER at the decoder output is null whatever the iteration. The BER improvement at the output of the decoder can not be emphasized. In these trials, the performance of the turbo equalizer are optimum at the second iteration and perform iterations above the second will be useless.

TABLE II

PERFORMANCE RESULTS IN BER

Scenario	Trial 1	Trial 2	Trial 3
BER equalizer output (1st iteration)	2.4e-2	3.9e-3	2.4e-3
BER decoder output (1st iteration)	0	0	0
BER equalizer output (2nd iteration)	2.2e-3	3.5e-3	9.6e-4
BER decoder output (2nd iteration)	0	0	0

V. CONCLUSIONS

The turbo equalizer improves the equalization performance when the signal to noise ratio is low or the ISI large. From the tested database, the signal to noise ratio was rather high and the BER at the decoder output was null after the first iteration making useless the iterations above the second. From these first results, the turbo equalization was successful suggesting great promise to improve the robustness of the transmission. Further works and new real sea experiments will be carried soon with the objective to show the good behavior of the turbo equalization for the high order modulations.

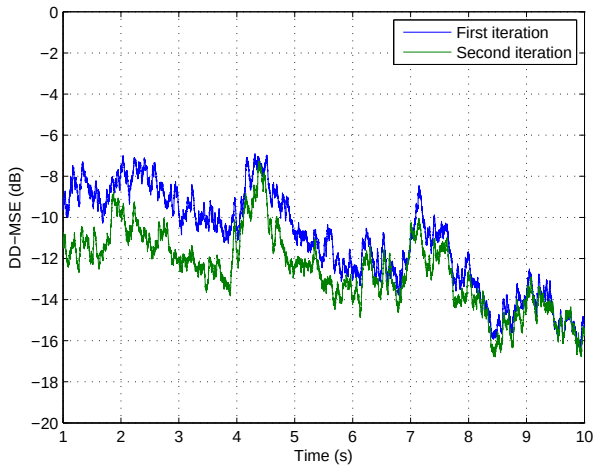

Fig. 4. Trial 2: DD-MSE at the output of the SIMO equalizer, QPSK, 2875 symbol/s, $f_c = 11.5$ kHz, distance=1000m, v=2.5m/s

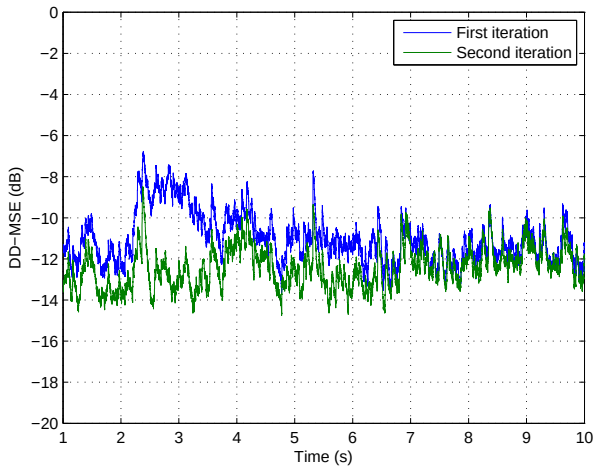

Fig. 5. Trial 3: DD-MSE at the output of the SIMO equalizer, QPSK, 3180 symbol/s, $f_c = 11.5$ kHz, distance=1800m, v=1.9m/s

REFERENCES

[1] J. Trubuil, G. Lapierre, and J. Labat, "Real time transmission of images and data through underwater acoustic channel: the trident system," in *Proc. of IGARSS'04*, Anchorage, USA, 2004.

[2] A. Glavieux, C. Laot, and J. Labat, "Turbo equalization over a frequency selective channel," *Proc. of Int. Symp. Turbo Codes*, pp.96-102, Sept. 1997.

[3] M. Tuchler, R. Koetter, and A. Singer, "Turbo equalization: principle and new results," *IEEE Trans. Comm.*, vol. 50,no. 5, pp. 754-767, May 2002.

[4] X. Wang and H. Poor, "Iterative (turbo) soft interference cancellation and decoding for coded CDMA," *IEEE Trans. Commun.*, vol. 47, no. 7, pp.1046-1061, July 1999.

[5] E. Sangfelt, T. Oberg, B. Nilsson, and M. Lundberg Nordenvaad, "Underwater acoustic communication experiments in the baltic sea," in *Proc. of Undersea Defence Technology UDT 2008*, 2008.

[6] J. Choi, R. Drost, A. Singer, and J. Preisig, "Iterative multi-channel equalization and decoding for high frequency underwater acoustic communications," in *Proc. of IEEE Sensor Array and Multichannel signal processing workshop, SAM 2008*, 2008.

[7] C. Polprasert and J. Ritcey, "Performance of the bit-interleaved frequency domain turbo equalization over experimental underwater acoustic channels," in *Proc. of Asilomar conference on signals, Systems and computers*, Pacific grove, CA, 2008.

[8] R. Otnes and T. Eggen, "Underwater acoustic communications: Long-term test of turbo equalization in shallow water," *IEEE Journal of Oceanic engineering*, vol. 33, pp. 321–334, July 2008.

[9] H. Meyr, M. Moeneclaey, and S. Fechtel, *Digital Communication Receivers: Synchronization, Channel Estimation, and Signal Processing*. New York: Wiley, 1998.

[10] M. Stovanovic, "Guest editorial: Underwater wireless communications," *IEEE Communications Magazine*, vol. 47, p. 78, Jan. 2009.

[11] J. Heidemann, U. Mitra, J. Preisig, M. Stovanovic, and M. Zorzi, "Guest editorial: Underwater wireless communications networks," *IEEE Journal on Selected Areas in communications*, vol. 26, pp. 1617–1616, Dec. 2008.

[12] B. Sharif, J. Neasham, O. Hinton, and A. E. Adams, "A computationaly efficient doppler compensation system for underwater acoustic communications," *IEEE J. Oceanic Eng.*, vol. OE-25, pp. 52–61, Jan. 2000.

[13] L. Freitag, M. Johnson, and D. Frye, "High-rate acoustic communications for ocean observatories-performance testing over a 3000 m vertical path," *Proc. of OCEANS'00*, pp. 1443–1448, Sept. 2000.

[14] Q. Cai, A. Wilzeck, and T. Kaiser, "A compound method for initial frequency acquisition in wcdma systems," in *IEE DSP Enabled Radio Conference*, Southampton, England, 2005.

[15] G. Eynard and C. Laot, "Blind doppler compensation scheme for single carrier digital underwater communications," in *Proc. of OCEANS'08*, Quebec, Canada, 2008.

[16] F. Gardner, *Demodulator Reference Recovery Techniques Suited for Digital Implementation*, ser. ESTEC Contract No. 6847/86/NL/DG. European Space Agency, 1988.

[17] C. Laot, R. Le Bidan, and D. Leroux, "Low complexity linear turbo equalization: A possible solution for EDGE," *IEEE Trans. Wireless. Comm.*, vol. 4, no. 3, pp 965-974, May 2005.