HAL
open science

All-fiber optical parametric amplifier at 1 μm using a microstructured fiber

M.W. Lee, T. Sylvestre, M. Delqué, Alexandre Kudlinski, Arnaud Mussot, J.-F. Gleyze, A. Jolly, H. Maillotte

To cite this version:

M.W. Lee, T. Sylvestre, M. Delqué, Alexandre Kudlinski, Arnaud Mussot, et al.. All-fiber optical parametric amplifier at 1 μm using a microstructured fiber. Meeting Series, 2010 IEEE, Jul 2010, Playa del Carmen, Mexico. pp.139-140, 10.1109/PHOSST.2010.5553642 . hal-00608315

HAL Id: hal-00608315

https://hal.science/hal-00608315v1

Submitted on 23 Apr 2021

HAL is a multi-disciplinary open access archive for the deposit and dissemination of scientific research documents, whether they are published or not. The documents may come from teaching and research institutions in France or abroad, or from public or private research centers.

L'archive ouverte pluridisciplinaire **HAL**, est destinée au dépôt et à la diffusion de documents scientifiques de niveau recherche, publiés ou non, émanant des établissements d'enseignement et de recherche français ou étrangers, des laboratoires publics ou privés.

All-fiber optical parametric amplifier at 1 µm using a microstructured fiber

M. W. Lee[1], T. Sylvestre[1], M. Delqué[1], A. Kudlinski[2], A. Mussot[2], J.-F. Gleyze[3], A. Jolly[3], and H. Maillotte[1]

Abstract— **We demonstrate experimentally an all-fiber optical parametric amplifier and wavelength converter at 1µm using a microstructured fiber and an electro-optical intensity modulator. A gain of 40dB is obtained for a signal at 1053nm. The experimental gain bandwidth agrees well with the theoretical one including Raman gain.**

Keywords— **Optical fiber amplifiers, fiber optical parametric amplifiers.**

FIBER optical parametric amplifiers (FOPAs) have received much attention over the last decade for telecommunication applications [1], [2]. Some outstanding progress have recently been made such as 70 dB gain and bandwidth with a few hundred nanometers by pumping at 1.5 µm [3], [4]. FOPAs in the 1 µm band is also of interest because of the increasing number of Ytterbium and Nd:YAG based optical systems. Recently, an optical parametric amplifier (OPA) at 1 µm using a microstructured optical fiber (MOF) has been reported with a microchip Nd:YAG laser as a pump source [5].

In this work, optical parametric amplification at 1 µm is experimentally demonstrated, for the first time to our knowledge, in a fully integrated all-fiber and polarization-maintaining (PM) optical system. It is implemented with a pump pulsed by an electro-optic intensity modulator specially designed to operate at 1 µm with a minimum insertion loss and enhanced extinction ratio. Efficient parametric gain and wavelength conversion are demonstrated by pumping at 1065 nm near the zero-dispersion wavelength of the MOF and by using a signal at a center-wavelength of 1053 nm. The choice of the signal wavelength matches the specific needs of the search of Inertial Confinement Fusion (ICF) in large laser systems [6].

The experimental setup is shown schematically in Fig. 1. The CW emission of a 6 mW pump laser is converted to pulse emission by an electro-optic intensity modulator designed at 1064 nm. A pulse generator is used to generate rectangular pulses and an RF amplifier amplifies pulses. In order to avoid Brillouin backscattering that limits the OPA gain [1], the pulse width and duty cycle of pulse train are set to 3.4 ns and 1/16, respectively. An Ytterbium-doped fiber amplifier (YDFA) amplifies the pump pulse. A bandpass filter with a linewidth of 2.5 nm is adjusted to the pump wavelength to suppress amplified spontaneous emission (ASE) of the YDFA. A DFB fiber laser emitting CW at 1053 nm is used as a signal source to be amplified by the FOPA. 1% of the signal power is injected into a fiber polarization controller (PC) whilst 99% of the pump power is injected into PC via an optical coupler (OC 99/1). As parametric amplification is polarization dependent, the linear polarizations of the pump and signal are maintained in the whole system as well as in the MOF by using polarization maintaining (PM) elements. A PC is added before the MOF to align both the pump and signal polarizations parallel to one of the birefringent axes of the MOF. The fiber output is split into two outputs by another 90/10 PM fiber OC. The 10% port is sent to an optical spectrum analyser (OSA) and the 90% port is injected into another bandpass filter centered at the signal wavelength. The amplified signal is then detected by a photodetector (PD) and recorded by a digital oscilloscope.

The MOF has a zero-dispersion wavelength (ZDW) of 1065 nm and provides anomalous dispersion at the pump wavelength required for phase-matching. A zoom of the fiber cross-section of the MOF is shown in Fig. 1. The pitch and hole diameter are 4.14 µm and 2.61 µm, respectively. The optical loss of the 400m-long MOF is measured as 8.1 dB. The pump wavelength is set to $\lambda_p = 1065.8$ nm where the maximum parametric gain for the 1053 nm signal is observed.

In Fig. 2(a), the signal power is −9 dBm at the FOPA output when the pump is on, whilst −33.5 dBm when the pump is off. Therefore, the signal is amplified by 24 dB via

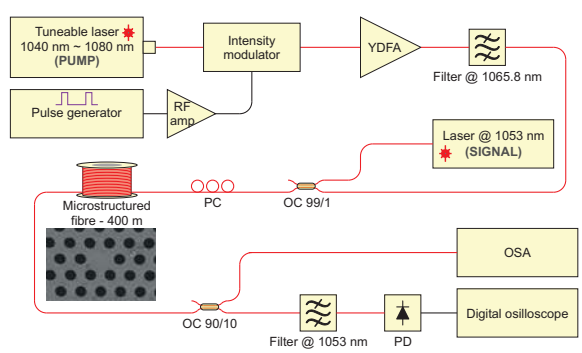

Fig. 1. Schematic diagram of the experimental setup. A SEM image of the fiber cross-section is shown. RF Amp: RF amplifier, YDFA: Ytterbium-doped fiber amplifier, OC: optical coupler, PC: polarization controller, PD: photodetector, OSA: optical spectrum analyser

[1] M. W. Lee, M. Delqué, H. Maillotte and T. Sylvestre are with the Département d'Optique P. M. Duffieux, Institut FEMTO-ST, Université de Franche-Comté, CNRS UMR 6174, 25030 Besançon Cedex, France. E-mail: thibaut.sylvestre@univ-fcomte.fr

[2] A. Kudlinski and A. Mussot are with the Laboratoire de Physique des Lasers Atomes et Moléculaires, IRCICA, Université de Lille 1, CNRS UMR 8523, 59655 Villneuve d'Ascq Cedex, France.

[3] J.-F. Gleyze and A. Jolly are with the Commissariat à l'Energie Atomique (CEA), Centre d'Etudes Scientifiques et Techniques Aquitaine, Chemin des sablières, 33144 Le Barp, BP2, France.

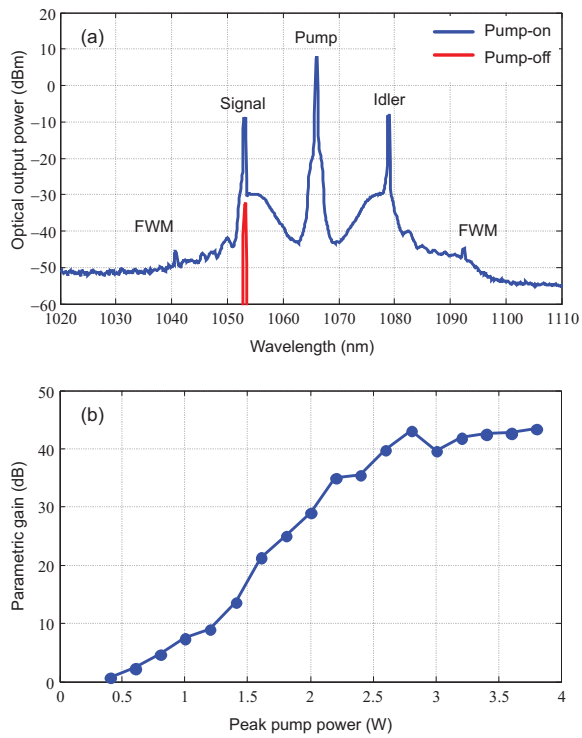

Fig. 2. (a) Spectra of the FOPA output for the 1053 nm signal at $P = 2.4$ W. The blue curve is output spectra at pump-on whilst the red curve at pump-off. (b) Parametric gains with respect to the peak pump power.

the FOPA with a peak pump power of $P = 2.4$ W. As the signal is converted from CW to rectangular pulses and amplified by the pulsed pump at the output, 11.1 dB of extra gain is added by taking into account 1/16 of the duty cycle of the pump. Hence, the total gain is obtained as 35.6 dB. In Fig. 2(a), the idler appears at 1079 nm with a power greater than the signal due to Raman-assisted parametric frequency conversion [7]. Cascaded four-wave mixing (FWM) signals also exist at 1040.7 nm and 1092.4 nm, respectively. Therefore, the FOPA exhibits high wavelength conversion efficiency. Despite of the filter at 1065.8 nm, residual ASE noise from the YDFA still remains at the input of FOPA and leads to the significant parametric ASE in Fig. 2(a).

The parametric gain efficiency has also been investigated with respect to the peak pump power P. Figure 2(b) displays parametric gains for peak powers P from 0.4 W to 3.8 W. As the power increases, the gains for the 1053 nm signal increases exponentially till about 40dB. However, the gain seems to saturate for the power over 2.8 W. This is because of the pump depletion and particularly parametric ASE noise. In fact, the parametric ASE noise increases significantly above $P = 2.8$ W. It is seen from the figure that the maximum parametric gain is obtained as 43 dB at $P = 3.8$ W. By taking into account 8.1 dB of the fiber loss, the maximum net gain of the FOPA can be estimated as 34.9 dB.

As the laser used for signal generation is not tunable, the

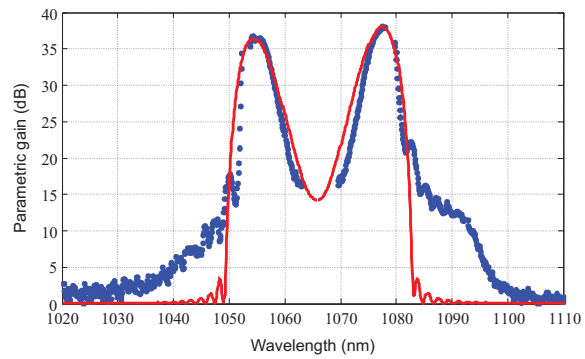

Fig. 3. Parametric gain bandwidth. Circle dots (blue): Experimental gain bandwidth extracted from Fig. 2(a). Solid line (red): fitted curve using standard FOPA theory including Raman gain.

experimental gain bandwidth at $P = 2.4$ W can be readily extracted from Fig. 2(a) for a gain bandwidth fitting. The extracted gain bandwidth is shown in Fig. 3. The signal, pump, idler and FWM sidebands are all suppressed and the gain values are adjusted so that the gain at 1053 nm matches to the gain of 35.6 dB obtained in Fig. 2(a). Fig. 3 also shows the red curve fitted with standard FOPA theory including the Raman gain. From the fitting, the zero-dispersion wavelength λ_{ZDW} and the nonlinear coefficient γ of the MOF are obtained as 1065 nm and 9.1 $\mathrm{W}^{-1}\mathrm{km}^{-1}$, respectively. These values are close to those estimated by a finite element method. Due to the Raman gain, the fitted curve in Fig. 3 shows a power asymmetry of the gain bandwidth and matches closely to the experimental curve. From the figure, the gain bandwidth of FOPA is estimated as a range of 1049–1083 nm for the given pump power.

In conclusion, we have demonstrated an all-fiber optical parametric amplifier at 1 µm. Parametric amplification at 1053nm with a gain of greater than 43 dB has been achieved with a pump pulsed by an electro-optical intensity modulator and a microstructured optical fiber with a zero-dispersion at 1065 nm. The FOPA demonstrated here may be used for for 1µm-band applications such as optical parametric chirped-pulse amplification (OPCPA), pulse optical replication or regeneration, ultrafast optical sampling and the next generation of optical oscilloscopes.

Acknowledgements

The author thank Photline Technologies for providing the electro-optic modulator.

References

[1] M. E. Marhic, *Fiber Optical Parametric Amplifiers, Oscillators and Related Devices*, Cambridge Univ. Press, Cambridge, 2007.
[2] C. J. McKinstrie et al., *Opt. and Photon. news*, vol. 18, pp. 34, 2007.
[3] T. Torounidis et al., *IEEE Photon. Technol. Lett.*, vol. 18, pp. 1194, 2006.
[4] M. E. Marhic et al., *IEEE Select. Topics Quantum Electron.*, vol. 10, pp. 1133, 2004.
[5] T. Sylvestre et al., *Appl. Phys. Lett.*, vol. 94, pp. 111104, 2009.
[6] D. Besnard, *Eur. Phys. J. D* vol. 44, pp. 207, 2007.
[7] T. Sylvestre et al., *Opt. Lett.*, vol. 24, pp. 1561, 1999.