HAL
open science

The Brythonic Reconciliation, from V1 to Generalized V2

Mélanie Jouitteau

To cite this version:

Mélanie Jouitteau. The Brythonic Reconciliation, from V1 to Generalized V2. The Linguistic Variation Yearbook, 2007, 1, pp.163-200. 10.1075/livy.7.06jou . hal-00605657

HAL Id: hal-00605657

https://hal.science/hal-00605657v1

Submitted on 17 May 2022

HAL is a multi-disciplinary open access archive for the deposit and dissemination of scientific research documents, whether they are published or not. The documents may come from teaching and research institutions in France or abroad, or from public or private research centers.

L'archive ouverte pluridisciplinaire **HAL**, est destinée au dépôt et à la diffusion de documents scientifiques de niveau recherche, publiés ou non, émanant des établissements d'enseignement et de recherche français ou étrangers, des laboratoires publics ou privés.

available in:
Linguistic Variation Yearbook 2007
comments welcome

publication version before publication version before

The Brythonic Reconciliation
From Verb-First to Generalized Verb-Second

Mélanie Jouitteau

CNRS, UMR 7110 LLF*

Abstract: I argue that despite their traditional verb-first vs. verb second partition, Welsh and Breton both instantiate a ban on verb-first and I present an analysis of these two languages as fundamentally verb second. In this view, so-called verb first orders prototypically illustrated by Welsh result from inconspicuous strategies to fill in the preverbal position, whereas traditional verb second prototypically illustrated by Breton results from conspicuous strategies to fill in the preverbal position. I show that both conspicuous and inconspicuous verb second orders are present in both Welsh and Breton. The difference in word order between Welsh and Breton is reduced to (i) a lexical parameter, that is availability of a free preverbal expletive particle in Welsh, and (ii) a syntactic parameter: Breton allows for the creation of expletives by short movement, a parameter shared with Icelandic and other languages instantiating stylistic fronting.

Keywords: Verb-first, verb-second, stylistic fronting, expletives, Breton, Celtic, Welsh, Brythonic, Icelandic, EPP

Introduction

The aim of this article is threefold: I wish to (i) propose the new generalization that Brythonic word orders obey a ban on verb-first, (ii) properly define the parameters responsible for intra-Brythonic variation and (iii), show how the Breton data can be exploited for the inquiry about the EPP Principle and its technical implementations. The article is organized as follows.[1]

First, I propose a new generalization for basic word orders in Welsh and Breton, both Celtic languages of the Brythonic branch. Welsh is traditionally described as a VSO language, in opposition with Breton described as V2. In contrast, I propose that both languages uniformly illustrate a ban on verb-first. They are fundamentally V2. In section 1, I show that a preverbal topic or focus triggers conspicuous V2 in both languages. In section 2, I turn to wide focus

* Various versions of this work have benefited from the precious comments of Hamida Demirdache, Milan Rezac, Johan Rooryck, Javier Ormazabal, Olaf Koeneman, Aritz Irurtzun, Joseph Aoun, Nicolas Guilliot and two anonymous *Lingua* reviewers. I also wish to thank the audiences of *the Fourth Celtic Linguistic Conference* in Cambridge, the *First Workshop on Syntax and Semantics* at the University of the Basque Country and the *Syntax Group* of the LLING laboratory in the University of Naoned/Nantes.

[1] The following abbreviations are used in the glosses: CL - Clitic, IMPF – Imperfect, SOAdv – subject oriented adverb. Matrix C heads are glossed PRT, in contrast to the preverbal particles (*rannig-verb*) *a, e, y* glossed '®'. I assume that ® is a realised Fin head into which the verb incorporates.

sentences: I show that Welsh word order is more accurately described as C-VSO or expletive-VSO. I present new data from Breton also showing C-VSO orders and expletive-VSO orders in wide focus sentences. I consequently reject the traditional VSO/V2 opposition between the two languages because in both languages the preverbal position has to be filled. So-called 'VSO' orders result from *inconspicuous* strategies to fill in the preverbal position, whereas prototypical V2 orders result from *conspicuous* strategies to fill in the preverbal position.

In section 3, I concentrate on the locus of variation between Welsh and Breton. I reduce the variation between them to (i) a lexical parameter and (ii) a syntactic parameter. Welsh has a lexical *inconspicuous* free expletive available, triggering so-called 'VSO' orders preceded by an *inconspicuous* preverbal element. Breton, in contrast, typically resorts to a syntactic operation, 'light expletive fronting', that brings a *conspicuous* material into the preverbal position, leading to prototypical V2 orders. Welsh does not have this syntactic *inconspicuous* movement available. Breton 'light expletive fronting' targets the closest postverbal element in the derivation and fronts it before the inflected verb. I carefully show that whatever the given numeration of a Breton wide focus sentence, *the chain of the moved preverbal element contains the immediate postverbal position*. I show that this generalization correctly obtains (i) the correct information packaging for V2 orders (ii) the restriction of V-frontings to wide focus sentences, (iii) the complementary distribution of 'light expletive fronting' with topicalization, *wh* movement, matrix C heads or merge of an expletive, and (iv) the precise set of ungrammatical preverbal elements in wide focus sentences (long extracted XPs and long extracted verbal heads, but also any internal IP element if there is a closer element).

In section 4, I propose that the ban on verb-first orders illustrated by Welsh and Breton is best understood as an EPP effect. I discuss the different technical implementations of the EPP available in the literature in view of the Brythonic data. Building on the parallel with Icelandic 'Stylistic fronting', I build on the proposal of Holmberg (2000, 2005) that movement can create expletives from any postverbal category, regardless of its X vs. XP status. The closest postverbal element splits its features, obtaining a *light expletive* that fronts as a last resort strategy to fill in the preverbal position. I show how the Breton data provides arguments for movement of more material than a phonological matrix, forcing a syntactic account of the EPP. I review different implementations of the EPP and show how the Breton data reveals their limits.

1. The word orders represented in both Welsh and Breton

Welsh and Breton are the two main Modern Celtic languages of the Brythonic branch. Descriptive grammars as well as the generativist literature traditionally oppose the two with respect to their basic word orders (see Roberts 2005 for Welsh and Jouitteau 2005b for Breton and references therein). Welsh illustrates a VSO language with typical V to C movement in main clauses and embedded, like Irish or Scottish Gaelic.

(1) Fe/Mi glywes i'r cloc. *Welsh*
C heard-1.SG. the clock
'I've heard the clock'.

The image for Breton is somewhat more complicated. Embedded Breton sentences seem uniformly of the Welsh CVSO type, but main clauses show a V2 pattern interrupted by a lexically restricted verb-first paradigm, or else the fronting of a verbal head across the auxiliary (so-called "Long head Movement" paradigms).
In this section, I present the comparative Welsh and Breton data that illustrate well-known similarities. I close with a discussion of the V2 characterization of Breton.

1.1. Topic and Focus

Focalisation strategies give rise to identical V2 orders in Breton and Welsh. In (2) to (4) below, the focalized constituent uniformly moves into the preverbal position and receives narrow focus reading.

(2) **Y plentyn** a redodd $_t_{Subject}__$ adref *Welsh*
Ar bugel a redas $_t_{Subject}__$ d'ar gêr *Breton*
the child ® ran home
'(It was) the child (that) ran home'.

(3) **Ceffyl** a brynodd y dyn _t_{Object}__ *Welsh*

Ur marc'h a brenas an den _t_{Object}__ *Breton*

a horse ® bought the man

'(It was) a horse (that) the man bought'.

(4) **Ar y pren** y canai 'r aderyn _t_{PP}__ *Welsh*

War ar wezenn e kane al labous _t_{PP}__ *Breton*

on the tree ® sang-IMPF the bird

'(It was) on the tree (that) the bird sang.'

Sentences in (2) to (4) are easily derivable by movement of an XP into a Focus projection, presumably to check a Focus feature in FocP. I assume a derivation where the inflected verb is located in the highest inflexional head (in the line of Harlow 1981, Rouveret 1990, 1994 for Welsh and Diesing 1990 for Yiddish). In the latest cartography developments, this inflectional head is Fin, the lowest head of an articulated CP domain. The preverbal particle glossed '®' is also located in Fin (see Jouitteau (2005b) for Breton and Roberts (2005) for Welsh). Preverbal topics in Breton show the same XP-VSO orders as the above preverbal focus. I derive them by merge of the preverbal XP in a TopP projection, a position from which they bind an IP internal pronoun (see Jouitteau2005b: chap 2). I assume that Brythonic orders with narrow reading (either topic or focus) are uniformly XP-VSO.

1.2. Preverbal C heads

Welsh and Breton also present the same word orders in embedded and in yes-no questions: C-VSO. Examples (5) and (6) illustrate C-VSO orders in embedded sentences, and examples in (7) and (8) illustrate C-VSO orders in yes-no questions in both languages.

(5) Dw I 'n meddwl Ø y dylech chi ddeud wrtho fo. *Welsh,* Roberts (2005)

am I Asp think C ® ought you say to-3.SG. he

'I think you ought to tell him.'

(6) Me a soñj din Ø e laro dit ar wirionez. *Breton*
I ® think to-1SG C ® will.tell to-2SG the thruth
'I think s/he will tell you the truth.

(7) **A** ddarllenodd Siôn y llyfr ? *Welsh*, Sadler (1988)
Q read.3SG John the book
'Did John read the book?'

(8) **Hag** eo gwir an dra-se ? *Breton*, Jouitteau (2005b)
Q is true the thing-here
'Is that true?'

I add preverbal negation illustrated in (9) into the inventory of C-VSO orders in Breton. I analyze preverbal negation in Breton as a C head triggering that-trace effects. In the example illustrated in (10), the prenegation subject is coreferent with a resumptive subject pronoun that triggers rich agreement [2].

(9) Ne glev ket mat ar stlejviled an tonoiù uhel. *Breton*
NEG hear.3.SG NEG good the reptiles the sounds high
'The reptiles do not perceive high frequencies.'

(10) Ar stlejviled ne glev**ont** ket mat an tonoiù uhel.
the reptiles C-NEG hear.3.PL NEG good the sounds high
'The reptiles^{+Foc} do not perceive high frequencies.'

The word orders examined so far are thus of two types, each of them represented in both Welsh and Breton: (i) XP-VSO in matrix sentences whose derivation contain Move or Merge of

[2] Schafer (1995) proposes that negation is an A-bar projection banning A-bar movement of the subject as a Relativized Minimality effect. Her proposal obtains the desired result that prenegation subjects appear with a resumptive trace internal to IP. However, the proposal is too strong as it predicts that any A-bar movement should trigger a resumptivity effect, which is never the case for non-subject XPs (see Jouitteau 2005b: chap 3).

an XP in a focus or topic position, and (ii) X-VSO where X is semantically imposed by the numeration (C, Q, Neg). The word order variation between Breton and Welsh is thus restricted to affirmative matrix *wide focus* sentences. In the following, we will investigate affirmative matrix sentences lacking narrow focus or topic reading, typically sentences that can answer to a '*what happened*' type of question. This so-called 'unmarked order' is traditionally described as VSO in Welsh, and as V2 in Breton (Urien 1982, Schapansky 1992, 1996, 1999).

1.3. The 'extra V2 step'; further toward the locus of variation

Stated as a VSO/V2 opposition, the difference seems large. Welsh and Breton thus appear to illustrate different types of languages. However, this opposition is weakened by an analysis that obtains Breton V2 via an intermediate VSO step. Movement of the verb over the subject triggers VSO orders in both Breton and Welsh, and an additional 'extra V2 step', restricted to Breton, further moves a constituent into the preverbal position (Anderson and Chung 1977, Anderson 1981, Stump 1984, Hendrick 1988, 1990, Borsley and Stephens 1989, Timm 1989, 1991, Schafer 1992, 1995 among others). The key variation between Welsh and Breton, in this scenario, is the presence *vs*. absence of the second step in the derivation, this 'extra V2 step' that Welsh lacks.

The 'extra V2 step' is a stipulation that has the weight of a good generalization if: (i) its presence can predict correct word orders in Breton, and (ii), its absence can predict correct word order in Welsh. I claim that neither (i) nor (ii) are correct.

With regard to Breton, the 'extra V2 step' would trigger the wrong results with regard to the data previously illustrated here, or would have to be reformulated at high theoretical costs. An 'Extra V2 step' must first be blocked in matrix sentences with filled topic or focus positions as in (2), (3) and (4). It means that a particular syntactic operation (anteposition of a preverbal element) applies only in derivations where there has been or will be no other anteposition of any XP preverbal element. The correct word orders thus is obtained only if we rely on a last resort status for the 'extra V2 step'. Now, this last resort operation has to be set such as to target only assertive affirmative matrix sentences with wide focus information packaging, as it should not apply in embedded sentences (C-VSO in (6)), in negative matrices (C-VSO in (9)) or in matrix

yes-no questions (Q-VSO in (8)). The last resort 'extra V2 step' should thus be sensitive to the presence of preverbal XPs, but also to preverbal heads: it must be blocked by the presence of any XP, but also of any preverbal head (C, Q, Neg). Borsley and Kathol (2000) state with reason that this result is a challenge for a derivational model. They propose that Breton word orders illustrate 'linear V2': the generalization is blind to the XP/head distinction because it applies on linear order. Note however that this generalization, absolutely accurate for Breton, is not less accurate for Welsh, as there is always either a head or an XP in the preverbal domain.

The attractive result of the 'extra V2 step' seems, at first sight, to be the reduction of the differences we have to postulate between Welsh and Breton. In fact, it is based on the generalization that Brythonic wide focus sentences illustrate a V2/VSO contrast, a generalization which proves inaccurate for both languages. In the following section, I will show that Welsh matrix wide focus sentences do show a preverbal element: a matrix C head. Welsh matrix wide focus sentences are thus more accurately described as C-VSO instead of VSO. I will also show that Breton does instantiate the same C-VSO orders. I consequently reject the idea that the 'extra V2 step' is the key distinction property of Breton.

2. Welsh and Breton C-VSO orders in wide focus sentences

Breton and Welsh both show grammatical C-VSO orders in *wide focus* sentences. Welsh unmarked surface order is C-VSO as in (1), repeated in (11), where the preverbal zone is filled by a merged C head (*mi* or *fe*, here in bold characters[3]).

[3] Grammaticalization of the matrix particles in Welsh is documented: *Mi/Fe* have been lexicalised from the reinterpretation of preverbal subject or expletive pronouns in a V2 state of the language (Willis 1998, Bury 2000 and Sainz 2002). This is illustrated below with the *Mi* particle in (i-a): the (i-b) glosses shows that Middle Welsh allowed for preverbal pronominal subjects together with coreferential rich agreement on the verb. The preverbal element *Mi* has been reanalyzed as a *dummy* particle. Welsh being a *pro*-drop language, rich agreement has been reanalyzed as illustrated in (x-b'), as identifying a postverbal *pro.*

(i) a. **Mi** welais gaer
b. 1.SG. saw-1.SG. fort
b'. **C** saw-**1.SG.** *pro* fort
'I saw a fort.'
c. **Mi** a ddygaist fy nghaws i. Willis (1998:226)
C ® stole-**2.SG.** *pro* my cheese me
'You stole my cheese'.

(11) **Fe/Mi** glywes i'r cloc.
C heard-1.SG. the clock
'I've heard the clock'.

The sentence is fine in 'out of the blue' contexts and the preverbal element has no semantic impact, other than making the wide focus reading possible. Occurrence of the *Mi/Fe* particles in Welsh is restricted to matrix sentences. The inventory of matrix C particles in Welsh also includes particles that appear integrated in the verbal compound as in the Modern Welsh pattern illustrated in (12) (see Roberts 2005:120). This particle is lexically restricted to the present and imperfect of the verb 'to be'. [4]

(12) **R**-oedd Pwyll yn arglwyd *Welsh,* Sainz (2001)
C-was Pwyll asp. Lord
'Pwyll was lord'.

The difference between Welsh and Breton does not lie, as usually assumed, in Breton lacking matrix C-VSO orders, but in the statistic number of sentences in which Breton has it, compared to Welsh. Merging a free preverbal matrix C head is the common option in Welsh (11), whereas it is always lexically restricted in Breton, like in the Welsh example (12). Matrix C head compounds are found in the locative and progressive form of 'to be' (13) [5], in future progressive constructions in the verb 'to go' (14), and, at least in the Gwened dialect, with the verb 'to come'

(i-c) fully illustrates the next coming step of the evolution where the new particle appears with a verb marked for other persons than 1.SG. The anaphoric disjunction with the historically [1.SG.] feature of *Mi* marks the end of the process: a matrix particle becomes available in all matrix sentences.
Willis 1998 claims that the VSO order of Brythonic languages is tied to a lexical parameter: the availability of a matrix particle. I share the intuition of this conclusion, but I do not share its formulation. The Merge of preverbal C heads does not trigger VSO orders, but C-VSO orders, which I analyze as a subcase of expletive-VSO orders. However, in the same line of thought, I propose that the matrix particles *Fe, Mi* retained their ability to satisfy the EPP from their respective origins. See Roberts (2005:120) for a complete inventory of Welsh C particles.

[4] Sainz (2001) considers that the affix *(y)r* is a particle historically created by the reanalysis of the perfect potential *ry/yr* in Middle Welsh.
[5] Kervella (1995:§744) suggests that the particle could be analysed as a preverbal adverb that would have been reinterpreted as part of the verb.

(15)[6].

(13) a. **E**mañ Maijo el levraoueg. *Standard Breton*
C-is Maijo in-the library

b. **E** oar o hadañ an ed. Favereau (1997:272)
C [were+ IMP.] at plant-INF. the wheat.
'We were planting the wheat'.

(14) a. **H**an me da laret deoc'h… *Standard Breton*
C-go.1.SG. I to tell to-you
'I'm going to tell you…'

b. **Eh** a da goueza. *Treger dialect*, Gros (1996 :32)
C go.3SG to to.fall
'S/He is going to fall.'

(15) a. **É** tan a laret… *Gwened dialect*
C come-1.SG. P to-say Guillevic and Le Goff (1986:97)
'I've just said…'

b. **E** ta brezel. *written Gwened dialect,*
C come war Herrieu (1994:11)
'The war came.'

The Breton preverbal C heads above exclusively appear incorporated into the verbal compounds. The association of a verbal root with a given C head seems lexically parameterized. In syntax, the verbal root in *Fin* moves further up and incorporates into the higher C head. In Jouitteau (2005b: chap 2), I analyse the Breton incorporated particle as a topic head, a stipulation meant to predict

[6] '*E ta Brezel*' could also be reanalyzed as a case of narrative fronting, as it stands as the title of the first paragraph of Herrieu's book. However, I have found no other example of verb-first narrative fronting effects.

that only hanging topics and scene setting adverbs can appear before an incorporated C head. Interestingly, Rouveret (1996) and Roberts (2005:33) consider that the [Particle-V] compound in the Welsh 'to be' paradigms is also higher in the structure than the canonical site for the inflected verb.

It is obvious that availability of the particle is tied at core to word order: the sentences from (13) to (15) exhaustively illustrate the restricted set of matrix 'verb-first' sentences type in Breton.

To summarize the patterns of preverbal matrix C heads exposed so far: both Breton and Welsh show a pattern of matrix C heads incorporated into the verbal root, whose availability is lexically restricted. Welsh is unique in resorting also to a dummy matrix C head (*Mi/Fe*). This particle is directly responsible for the statistic importance of C-VSO orders in Welsh. In contrast to Welsh, Breton did not develop dummy matrix C heads that would be freely available in all *wide focus* sentences. Consequently, Breton matrix C-VSO orders are proportional to the lexical restriction of the Breton expletives C heads illustrated in (13) to (15).

Breton however developed another dummy preverbal element that is also restricted to matrix sentences. In (16)a, b and c, I show that this dummy element is obligatory when no other element precedes the inflected verb. In (16)a', b' and c', I show that the dummy element is ungrammatical when the preverbal position is already filled. From dialect to dialect, the morphology of the expletive is based on the morphology of the corresponding infinitive form of the verb 'to be'.[7] Some speakers appear to allow only (17), where the inflected verb is identical in root with the infinitive-expletive.

(16)	a.	***(bez')** e ra	glav		a'.	Glav	**(*bez)**	a ra	*Standard Breton*
	b.	***(bout)** e ra	glav		b'.	Glav	**(*bout)**	e ra	*Gwened dialect*

[7] The preverbal '*bez*' is not restricted to wide focus. It cannot trigger focus on the inflected verb, but it can serve for 'verum focus'. The particle '*bez*' triggering verum focus is not restricted to last resort EPP environments. Kervella (1995:§742) mentions the use of preverbal '*Bez*' as a way to trigger focus on the inflected verb. However, I consider that this focus effect is suspect and I maintain my expletive hypothesis. Kervella's judgements on information packaging are subject to caution since he does not consider the very existence of out of the blue/wide focus sentences. I consider that focus on the lexical verb is obtained in Breton via VP fronting across a '*do*' auxiliary (-it is to read she does-).
For previous mentions of the Breton preverbal expletive '*bez(añ)*', see Schafer (1997:146) and Borsley and Kathol (2000) citing her. They remark that this preverbal expletive does not seem to be linked to any IP internal position. For a more fine-grained view of the morphological variation of this element across dialects, see Leroux (1927) ALBB map 30 and Le Du (2001) NALBB, map 28.

c. ***(bit)** ë ra glav c'. Glav **(*bit)** ë ra *Poher dialect*
to-be ®-does rain. rain **to-be** ®-does
'It rains'.

(17) ***(Bez')** eo unan hag a c'hellfe skoazellañ ac'hanomp, a gav din.
to-be ®.is one C ® could-he help P-us, ® find to-me
'He is one who could help us, I think'.

The preverbal expletive *Bez'* in Breton prevents a verb-first order, but is not associated at all with the notion of subjecthood. Its morphologically takes from a shortening of the infinitive form of *bezañ* 'to be', and it does not show any sign of association with the postverbal subject. In this sense, it is a preverbal *free* expletive, in contrast with expletives like *there* in English. The examples from (18) to (20) below show successively that the preverbal Breton expletive triggers no definiteness effect on the postverbal subject, is not restricted to unaccusative constructions and is compatible with first, second and impersonal person.

(18) **Bez** e yelo (**al** lein / **ur** gastelodenn) war an tan. *Standard Breton*
EXPL ® will-go (the breakfast / a pan) on the fire
'Someone will put (the breakfast / a pan) on heat.'

(19) **Bez**' e laz-it bopred ma lapined!
EXPL ® kill-2PL always my rabbits
'You always kill my rabbits!'

(20) **Bez'** e c'hell-er kavet tokoù e gallaoueg. Mantell (2000)
EXPL ® can-IMP to.find accents in Gallo
'We can find accents in Gallo.'

The X vs. XP status of *bez* is far from clear, and uneasy to test, as any manipulation into the preverbal area - to whom it is restricted - makes it disappear. As it is a free dummy preverbal element restricted to matrix sentences where nothing else fills in the preverbal position, I treat it on a par with the Welsh free matrix particle *Mi/Fe*. Diachronic arguments certainly do not oppose

to their uniform expletive treatment, as illustrated below in a late Middle Welsh transitive expletive construction illustrated in (21). The preverbal pronominal expletive *Ef* is not available in Modern Welsh anymore. It is this particular element that has been later reinterpreted as the matrix C head *Fe* (see Borsley, Tallerman and Willis 2007:297 for the evolution of the contexts where preverbal *Ef* could be found in Middle Welsh).

(21) **Ef** a danuon Duw … taryan itt. *Middle Welsh,* cited in Willis (2005)
It PRT send God shield to-you
'God will send a shield to you.'

I uniformly analyse the Breton and Welsh free dummy preverbal elements as expletives satisfying a syntactic ban on verb-first. This proposal is designed in accordance to their restricted distribution (matrix preverbal areas that are not filled by anything else), as well as their null semantic impact. The proposal that the Welsh *mi*-VSO and *fe*-VSO matrix sentences are instances of expletive-VSO orders has far reaching theoretical consequences, in particular for the traditional typology of expletives, which considers only XP elements as opposed to functional heads. I wish to take this step, and I assume that the crosslinguistic typology of expletives includes elements, XP or heads, which are semantically empty, and whose sole function is to prevent verb-first orders. I leave the discussion about the syntactic rule that forces their presence to section 4. For the moment, I send the difference between Welsh and Breton, the one using matrix C heads as expletives, the other using the expletive *bez*, 'to be', to a lexical parameter due to different diachronic developments both aiming to create elements that could satisfy a ban on verb-first.

The typological image developed here so far shows a complete congruence of word orders in both Breton and Welsh. Both languages show similar XP-VSO orders with a preverbal XP narrow topic or focus reading, both languages have C-VSO orders in embedded sentences and yes-no questions, and both languages have C-VSO and expletive VSO orders in wide focus sentences. Breton and Welsh however do have contrasting word orders. In the following section, I will concentrate on the main locus of variation in Brythonic word order: Breton has a movement expletive strategy available, whereas Welsh has not.

3. The locus of variation

Breton wide focus sentences are not restricted to *bez*-VSO orders. In this section, I will show that the preverbal position can be filled by either a subject, an agent oriented adverb, a past-participle, a passive participle, an infinitive, or an aspectual particle. These frontings are usually assumed to be completely free. I assume that this is far from being the case, and I will argue for the generalization in (22).

(22) In Breton wide focus sentences derived by movement, the preverbal element originates from the immediate postverbal position.

In other words, the wide variety of possible fronted elements in Breton wide focus sentences is exactly proportional to the wide variety of elements that can be found in the immediate postverbal position, depending on the particular numeration/derivation of each sentence. The situation is schematically illustrated below: the inflected head stands in Fin, the lowest head of an articulated CP domain. Y is the immediate postverbal element, which fronts by a very short syntactic movement as an expletive strategy.

(23) $[_{TopP}\ [_{FocP}\ [_{FinP}\ \ Y_j\ \ [_{Fin}$ ®-V] $[_{IP}\ \ \cancel{Y}_j$

Movement of Y across the inflected head is semantically equivalent to merging an expletive, and does not trigger any narrow reading effect on Y. I call this very short movement, which has no impact on information packaging, 'expletive' movement. Under the expletive movement hypothesis, Breton and Welsh show the same word orders (VSO) at the relevant level of semantic interpretation. Expletive movement provides a unified derivation of the wide focus orders of Breton despite the diversity of the elements targeted (diversity in category; D, V, Adv, Asp, etc., and diversity in syntactic status; X and XPs).

I will now go through the different possible values of Y in (23), showing for each possible value of Y that (i) Y is fronted from the immediate postverbal position, (ii) only Y, the closest postverbal element, can be fronted by expletive movement. Moreover, I will check the

predictions induced by the last resort status of expletive movement: for each value of Y, I will make sure that no operation obeying the generalization in (22) is ever available if verb-first is avoided by other means.

3.1. The fronted argument of an existential construction

In the example in (24), the '*what happened*?' type question ensures that the answer in B constitutes a wide focus sentence. All information is new and the fronted element does not receive any focus or topic reading.

(24) A: - Petra nevez ' zo e Breizh ? *Ar Paper Timbr*, traditional song
What new ® is in Brittany
'What is new in Brittany?'
B: - [Trouz ha moged] ' zo __ a-leiz
noise and smoke ® is abundantly
'There is a lot of noise and smoke.'

The sentence in (25), where an expletive is merged in the preverbal position, also constitutes a correct answer to (24) A. It shows the argument of the existential construction appearing in the immediate postverbal position.

(25) [$_{\text{EXPL}}$ Bout'] 'zo trouz ha moged a-leiz.
EXPL ® is noise and smoke abundantly
'There is a lot of noise and smoke.'

The example in (26) shows that when negation is merged into the preverbal domain, an expletive cannot be merged and the argument of the existential construction receives an obligatory narrow reading.

(26) (Trouz ha moged/ *Bout) n' eus ket a-leiz.
(noise and smoke / EXPL) NEG is NEG abundantly
'There is not a lot of NOISE AND SMOKE.' focus
'It is noise and smoke that there isn't abundantly.' contrastive focus
'Noise and smoke, there is not a lot of.' topic
'As for noise and smoke, there is not a lot of it.' hanging topic

3.2. DP Subject

The generalization in (22) predicts that Breton has wide focus sentences with SVO orders if the derivation brings it as the closest postverbal element. Stephens (1982), Timm (1991) and Schapansky (1996) have already noted that Breton SVO orders are not restricted to a narrow focus reading on the subject, and that focus movement cannot exhaustively account for SVO orders. Timm (1991 :281) and Schapansky (1996) have concordant results for SVO occurrences in both oral and written corpus of Modern Breton : a large proportion of conspicuous V2 orders are SVO. Breton SVO orders as illustrated in (27) can be interpreted either with a narrow topic/focus reading on the subject, or with wide focus reading of the sentence.

(27) Anna a lenn ____ al levr .
Anna ® reads the book
'Anna reads the book.' / 'It is Anna that reads the book.'

Below, I check that SVO unmarked orders are banned when another element already occurs in the preverbal position. The examples in (28) show that expletive movement of the immediately postverbal subject is ungrammatical when a matrix C head is available[8].

(28) a. (*Me) **h**an (me) da laret deoc'h.
I C-go I to tell to-you
'I'm going to tell you.'

[8] The ungrammaticality of preverbal movement into FocP is accounted for by the stipulation that the incorporated C head is higher than FocP (Jouitteau 2005b: chap 2).

b. (*Me) **é** tan (me) a laret…
I C-come I to tell
'I'm going to tell you.'

c. (*Manon) **e**mañ (Manon) el levraoueg.
Manon PRT-is Manon in-the library
'Manon is in the library.'

Unmarked subject fronting is also incompatible with negation as in (29), with *Wh* movement as illustrated in (30), or in embedded sentences as in (31).

(29) (* Manon) **n'** he doa ket (Manon) kuzhet ar c'hazh
Manon$^{\text{-Foc}}$ **NEG** had NEG Manon hidden the cat
'Manon had not hidden the cat.'

(30) Petra (* **Tom)** a wele (Tom) t_{WH} ?
what Tom$^{\text{-Foc}}$ ® saw-3.SG.M Tom
'What did Tom see?'

(31) Goulenn a ra m' (* Manon) he doa (Manon) kuzhet ar c'hazh.
ask ® does if Manon she has Manon hidden the cat
'S/He ask if Manon had hidden the cat.'

The generalization in (22) further correctly predicts that long extracted preverbal subjects are restricted to narrow reading (see section 3.7)

3.3. Verb Fronting

Verb Fronting is preverbal movement of a verbal head (an infinitive, a past participle or a passive participle), across an inflected auxiliary. This word order type illustrated in (32) is mostly known in the literature on Breton as the 'Long Head Movement' paradigm. The wide focus answer illustrates fronting of a passive participle across the auxiliary '*be*'.

(32) A : - Petra 'zo c'hoarvezet a newe? *Gwerz Lezobre,* traditional song
what ®-is happened of new
'What new happened?'

B : - **Lavaret** 'zo __ d'ac'h-c'hui, Lezobre, dont d' gombati maurian ar roue.
told ®-is to-2.PL-2.PL Lezobre, come to combat moor the king
'It is ordered to you, Lezobre, to come combat the Moor of the king.'

Alternatively, an expletive can be inserted (33), or focus fronting can take place (34). In both cases, the past-participle appears as the closest postverbal element, showing that movement of the passive participle in (32) takes place from the closest postverbal site.

(33) [$_{\text{EXPL}}$ Bout] 'zo **lavaret** d'ac'h-c'hui, Lezobre, dont d' gombati maurian ar roue.
EXPL is told to-2.PL-2.PL Lezobre come to fight moor the king
'It is ordered to you, Lezobre, to come combat the moor of the king.'

(34) [$_{\text{VP}}$ Dont d' gombati maurian ar roue]$^{+\text{FOC}}$ 'zo **lavaret** d'ac'h-c'hui, Lezobre _t^{VP}_.
come to fight moor the king is told to-2.PL-2.PL Lezobre
'It is ordered to you, Lezobre, to come combat the moor of the king.'

However, the image is not always that clear: subject fronting and V-fronting sometimes seem to be equivalent options. The optionality in fronting illustrated in (35) seems at first sight to go against the generalization that expletive movement targets the closest, and only the closest postverbal element.

(35) (Manon / kuzhet) he doa (Manon) (kuzhet) ar c'hazh
Manon hidden have.3SGF Manon hidden the cat
'Manon has hidden the cat.'

However, I argue this optionality is in fact instantiated in the postverbal area. This is illustrated below in (36), taken from Rezac (2004) citing Kervella (1995).

Kervella (1995:373)

(36) Dec'h en devoa (ar merour) gwerzhet (ar merour) leue e vuoc'h ruz.
yesterday ®.3.SG.M had the farmer sold the farmer calf his cow red
'Yesterday the farmer had sold the calf of his red cow.'

I assume that there is an optional short head movement of the past participle into the middle field that can move the past-participle head over the subject and consequently make it the closest target for expletive movement (Rezac 2004, Jouitteau 2005b). Breton speakers vary as to their preference for postverbal placement of the subject with respect to the past-participle head.

Favereau (1997:326-7) discusses this variation and attributes these opposite parameterizations to different speech-levels (see also Gerven 2002, and the discussion in *Tír na nÓg* 2000, 321:79, 322:97). I leave two scenarios open. One option is that the short movement of the verbal head is a syntactic option available for all speakers. In this case, some socio-linguistic factor rejects overt Aux-V-S orders, and all speakers should get complete optionality in fronting as illustrated in (35). An alternative scenario is that some speakers syntactically disallow short movement of the verbal head into the middle field. In this case, the prediction is that these speakers should allow for verb-fronting only when the subject does not intervene, that is only in sentences with incorporated pronominal subjects. These particular speakers should disallow V-fronting in (35). Interestingly, Leroux (1957 :466) notes a preference for V-fronting in sentences with incorporated pronominal subjects. He estimates that, in ninety percent of cases, constructions involving infinitive fronting over the auxiliary *ober,* 'to do', arise with pronominal subjects in Middle Breton and Modern Breton. Further research is needed to choose between the two above mentioned scenarios.

Concerning the generalization in (22), I maintain that V-fronting arises in environments where the verbal head comes from the closest postverbal site. I will now show that V-fronting has the last resort status of an expletive strategy. V-fronting is incompatible with negation (37) or in a C-VSO embedded sentence (38), where the inflected head is already preceded by another head[9].

[9] An anonymous reviewer points out that embedded sentences are not restricted to C-VSO orders with the particle *ha(g)*. The data raised is the following, illustrating verb-fronting in an embedded. This particle *ha(g)* is also used as a C head in assertive embedded, triggering the same optionality (Jouitteau 2005b: chap 2). The *ha(g)* particle is morphologically similar to a coordination particle. The *ha(g)* particle seem to either count as the first element of the linear V2, or to take a linear V2 clause as its internal argument.
N' ouzon ket ha (lennet) en deus (lennet) Yann al levr.

(37) (* Kuzhet) **n**' he doa ket (kuzhet) ar c'hazh
hidden **NEG** had NEG hidden the cat
'She had not hidden the cat.'

(38) Goul a ra ganit (* kuzhet) m' he doa (kuzhet) ar c'hazh
to-ask ® do to-me hidden if she has hidden the cat
'S/He asks me if she had hidden the cat.'

Wh movement is incompatible with expletive movement of a verbal head as illustrated in (39).

(39) Petra (* **lennet)** en deus (lennet) Tom ~~petra~~ ?
what read ®-3.SG has read Tom
'What did Tom read?'

All instances of verb-fronting seem to violate the Head Movement Constraint (HMC) because the head is moved across the auxiliary, that is across another c-commanding head. My implementation of the syntactic operation at play will account for this (see section 4).

3.4. Unmarked fronting of an object

Fronted objects with a wide focus reading are difficult to find in a corpus. Their rarity, I assume, is proportional to the restriction of environments that make them the closest postverbal element. For an object to be the immediate postverbal element, the numeration of the sentence must combine the different following factors: a synthetic verb, a pronominal incorporated subject, and the absence of intervening adverb. Such a case is illustrated in (40), and restriction to narrow focus by an intervening subject in (41).

NEG know.1SG NEG Q read 3SG.M have read Yann the book
'I don't know whether Yann has read the book.'

(40) A: - Petra a c'hoarvezo? B: - Va lein e tebrin ~~va lein~~ .
what ® happen.FUT.3.SG my breakfast ® eat.FUT.1SG my breakfast
'What will happen?' 'I will eat my breakfast.'

(41) Va lein e tebro an diplodokus ~~va lein~~ bemdez.
[my breakfast]$^{+FOC}$ ® eat.FUT.3SG the diplodocus my breakfast everyday
'The diplodocus will eat MY BREAKFAST everyday.'

OVS orders in Breton are generally assumed to be restricted to an obligatory narrow focus reading, and I consider it is an important result of the generalization in (22) that it predicts the precise rare environment where OVS unmarked orders are possible.

3.5. The problem of the aspectual particle 'bet'

Phillips (1996 :250) notes that verbal heads can move preverbally across the *bet* aspectual particle, and states it is a case of long distance V-fronting. The observation is repeated in Kathol & Borsley (2000:695) with the data in (42). The example with a fronted PP in (42)a illustrates the normal postverbal word order. In (42)b, the particle *bet* is not an intervener for V-fronting, but the example in (42)c. shows that this aspectual particle is not invisible for expletive movement: *bet* is the fronted element in (42)c. Finally, (42)d. ensures that the two previous examples are really cases of expletive movement as they are shown to be complementary.

Kathol & Borsley (2000:695)

(42) a. [Er gegin] meus bet kavet ul levr ~~er gegin~~ .
in.the kitchen have.1SG been found a book in.the kitchen
'I have found a book in the kitchen.'

b. kavet meus bet ~~kavet~~ ul levr

c. bet meus ~~bet~~ kavet ul levr

d. *[bet kavet] am eus ~~bet kavet~~ ul levr
been found have.1SG been found a book
'I have found a book.'

The problem here for the generalization in (22) is that fronting of the verbal head in (42)b seems to show that *bet* does not count as an immediate postverbal element, whereas it seems to be able to count as the immediate postverbal element in (42)c. I propose that the postverbal *bet* does not count as an intervener for V-fronting (not does it for subject fronting or any expletive movement) because it is cliticized to the inflected head. The preverbal occurrence of *bet* is not a case of expletive movement: the preverbal *bet* is directly merged as an expletive. This analysis would be perfectly ad hoc if the two types of *bet* couldn't be found in the same sentence, but they are, which is impossible for any other postverbal element. The example in (43) shows the doubling of the particle *bet*. The sentence in (44) illustrates the occurrence of the postverbal aspectual particle *bet* alongside the merged preverbal expletive *bout* (dialectal alternative form of *bez*).

An teir seizenn, traditional song

(43) **Bet** zo **bet** un amzer, un amzer tremenet, e karen o kariñ hag e vezen karet.
been is been a time a time passed ® loved P to-love & ® was loved
'There has been a time, a time past, I loved to love and I was loved.'

(44) **Bout** zo **bet** un amzer e tougen teir seizenn.
to-be is been a time ® wear.PAST three silk.SINGULATIVE
'There has been a time I used to wear three silk ribbon.'

It is hard to find any contrast between preverbal *bout* and *bet* here, since their semantic impact is null in both sentences. Moreover, the fact that both preverbal *bet* and *bout* are found in the very same song suggests that the variation is superficial.

In some uses, however, the aspectual particle *bet* seems to have a semantic impact in accordance with its perfective morphology. In the example in (45), the preverbal *bet* cannot be an expletive; quite the contrary, the *bet* particle here introduces the only new information of the sentence: the endpoint of the accomplishments, that is their realisation, happened before utterance time.

Luzel (1971)

(45) 'Nn aotro 'r Vurwenn 'n euz komandet / ma vije 'c'hane distaget ; ha war ar chafot lakaët
the mister the Bourblanc has ordered / that would-be of-it detached, & on the scaffold put
Bet eo ac'hane distaget, ha war ar chafot lakaët.
been is of-it detached and on the scaffold put
'Mister de Bourblanc has ordered that she would be detached from it (the gibbet) and so has it been done.'

The derivation of (45) does not run into the intervention effect problem, because *bet* is here semantically motivated.

I distinguish two different types of *bet* particles. The first type, illustrated in (42), is just a superficial morphological variant of the preverbal expletive *bez* or *bout* and serves as pure expletive that can be merged preverbally. The second, illustrated in (45), is a perfective particle, which can bring new information into the sentence. In postverbal position, the *bet* particle undergoes a cliticization process. *Bet* particles consequently never trigger intervention effects for expletive movement [10].

3.6. Agent oriented adverb and intervening effects

Agent oriented adverbs such as *voluntarily, probably* or *by chance* have scope over the subject and are presumably merged higher than *v*P[11]. Whenever an agent oriented adverb is merged into the structure, it becomes the closest target for expletive movement. The example in (46) is taken

[10] I do not exclude that the expletive '*bet*' type also occurs in the postverbal position. Notice that in (42), the perfective value of the postverbal particle was already brought by the fronted past participle. The paradigms of '*bet*' expletive doubling should be analysed in a par with echoic pronouns in Wrong Subject Constructions, that instantiate similar postverbal doubling of the element that satisfies the EPP as in (x). Notice that the postverbal echoic pronoun [1SG] does not incorporate into the verbal head and seems invisible for agree.

(x) Me 'zo me laouen ma c'hoar.
me ® is me happy my sister
'My sister is happy.'

[11] An alternative assumption about adverbs is that they are freely inserted into the structure. Such an assumption could account for EPP satisfaction by the preverbal merge of an adverb. Breton still needs an investigation of adverb types, together with their respective behavior. Further research on the topic could for example check wether for any type of adverb, it can undergo fronting in wide focus sentences only when immediately postverbal. Counterexamples would advocate for the free-merge hypothesis of adverbs (Ernst 2002 *vs.* Cinque 1999 among others).

from an advertisement for a spellchecker in Breton. The adverb *a-ratozh* modifies the passive participle head. Both narrow and wide focus reading are available in the sentence. However, pragmatics favours the wide focus reading, as illustrated in the glosses.

(46) **A-ratozh** eo bet graet evit labourat gant meziantoù burevek M***.
intentionally is been done for to-work with office software M***
'It has been created in order to work with the software of M***.'
'??? It is intentionally that it has been created to work with the software of M***.'

The fact that the adverb can be fronted without a narrow focus/topic reading is a sign of its fronting by expletive movement. Accordingly, whenever an agent oriented adverb is present in the numeration, neither a subject nor a verbal head can front by expletive movement. In (47), an agent oriented adverb bans any other expletive movement: an intervening agent oriented adverb blocks expletive movement of a verbal head in (47)b or of a subject in (47)c.

(47)	a.	Dre chañs	he doa	_____	Manon	kuzhet	ar c'hazh.
		by chance	have.3.SG.F		Manon	hidden	the cat
	b.	*Kuzhet	he doa	dre-chañs	Manon	~~kuzhet~~	ar c'hazh.
		hidden	have.3.SG.F	by chance	Manon	hidden	the cat
	c.	[Manon $^{+FOC}$]	he doa	dre-chañs	~~Manon~~	kuzhet	ar c'hazh.
		by chance	have.3.SG.F	by chance	Manon	hidden	the cat
		'Luckily, Manon had hidden the cat.'					

3.7. Unavailable Targets

Finally, I briefly check that elements that never reach the immediate postverbal position remain unavailable targets for expletive movement. Long distance extracted Adverbs (48) and long distance extracted Subjects (49) cannot front without a narrow focus reading. These long extraction patterns can only be derived by topicalization movements.

(48) **Dre-zegouezh** [am eus klevet [he deus __ Anna desket he c'hentelioù
By chance have.1.SG. heard have.3.SG.F Anna learned her lessons
* 'I've heard that Anna had learned her lessons by chance.'
'It is by chance that I've heard that Anna had learned her lessons.'

(49) **Anna** [am eus klevet [he deus __ desket he c'hentelioù.
Anna have.1.SG. heard have.3.SG.F learned her lessons
* 'I've heard that Anna had learned her lessons.'
'It is Anna that I've heard that she had learned her lessons.'

Topicalization is not a syntactic operation available for a head, and verb fronting, which is achieved by expletive, short movement, is consequently clause-bound. This restriction for V-fronting is well known since Stephens (1982) and Borsley, Rivero and Stephens (1996). A past participle can be extracted from a matrix position as in (50) but not from an embedded clause as in (51):

(50) **Desket** he deus __ Anna __ he c'hentelioù.
learned have.3.SG.F Anna her lessons.
'Anna has learned her lessons'.
(51) * **Desket** [am eus klevet [he deus Anna __ he c'hentelioù]].
Learned have.1.SG. heard have.3.SG.F Anna her lessons
'I've heard that Anna had learned her lessons.'

I hope I have convincingly shown that preverbal elements in wide focus sentences obey the generalization in (22). In the coming section, I will expose and discuss the different technical solutions proposed in the literature that could account for such a generalization.

4. Brief history of the EPP and discussion of its formalisation

As we are concerned here with expletive movement, which I take to be an EPP effect, I briefly lay out the different traditions of analyses of the EPP, before entering into the different formulations of the EPP that the Brythonic paradigm requires.

The Extended Projection Principle emerges in Chomsky (1982) as a rule ensuring contrast between DPs and sentences: sentences need a subject whereas DPs do not. In Chomsky (1986), EPP is formulated as to ensure that a subject is present in sentences at surface structure. In early Minimalism (Chomsky 1995), the EPP is implemented by an uninterpretable [D/N] nominal feature on T. This theoretical step opens a way for divorcing the notion of the EPP and the notion of subjecthood. This marks the first drastic extension of EPP paradigms. EPP effects can potentially extend to all DP-V orders: quirky subjects, accusative fronting in impersonal adversatives, dative experiencers, OVS orders with objects in A position, etc. Preverbal adverbs of Locative inversion or the expletive *there* enter the EPP paradigm so long as an interpretable [D] feature can be postulated on them.

The movement towards an extension of the paradigms accounted for by the EPP continues in later versions of Minimalism. The field splits in (at least) two principal traditions of analysis. Both traditions can be characterized by a constant extension of the paradigms of EPP effects, but the direction of this extension is different in each tradition. The first tradition extends the paradigms of EPP effects in postulating EPP effects lower than T. In short, the hypothesis of EPP on T consisting of an uninterpretable [D] is taken to find its mirror image in *v*P, triggering object-shift which becomes an EPP effect. In the late 90's, extension of the sites where the EPP is postulated drastically increases: as the theory postulates that any syntactic relation can be established at a distance, overt movement becomes redundant and EPP implements the superficial requirement on overt movement. At this stage of the theory, any overt movement becomes an EPP effect. A reductionist tradition develops in a reaction to this EPP spreading, and various authors attempt to reduce entirely the EPP to the Inverse Case Filter (Bošković 1997, 2002, Miyagawa 2003 among others), or to a φ-feature sharing relation (Boeckx 2000). In substance, the reductionist approach tends to reintroduce the notion of non-redundant movement and works out solutions that would do without the notion of the EPP.

A separate tradition of analysis also starts from Chomsky's (1995) formulation of [-D] on T and extends the paradigm of EPP effects, but in another direction. The central idea is not to postulate EPP effects lower than T, but to enlarge the set of elements targeted by EPP[12]. The intuition is

[12] This tradition crucially ties the EPP effects to the inflected head. Bošković labels this EPP 'Final EPP', as it would be the latest EPP effect in a bottom-up derivation. Notice however that this does not mean that 'Final EPP' is site dependent. Final EPP targets indifferently SpecCP in V2 languages and SpecTP in SVO languages.

that a formulation of the EPP that would do without the restriction to [+D] targets should be able to account for V2 effects, as well as preverbal possessive PPs and Locative Inversion. Representatives of the 'final EPP' tradition are, among others, Holmberg (2000, 2005) for Icelandic, Roberts and Roussou (2002) for V2 languages, Bury (2002, 2003, 2005), Bailyn (2004) with the Generalized inversion proposal, Rezac (2004) for Breton and Jouitteau (2005b) for Celtic languages. The generalization we have examined so far in Brythonic clearly falls under the second tradition of EPP analysis. Any formulation of the EPP that will account for the paradigms of Celtic is immune to the reductionist approach: verbal heads or matrix C heads cannot serve as discharging Case and the presence of preverbal heads cannot be enforced by the Inverse Case Filter. Moreover, the Inverse Case Filter and the EPP make predictions for different sites in Brythonic: if the Inverse Case Filter is active in Breton or Welsh, it enforces distribution of Case to the subject in its canonical position, that is on the right of the inflected head. EPP effects, by contrast, show up on the left of the subject, showing again that EPP cannot dissolve into the Inverse Case Filter.

I will argue for a scenario such as the one illustrated below. This scenario is also a working program for the formulation of the EPP. The structure in (52) triggers ungrammatical orders because the EPP is not satisfied in verb-first orders. In case no expletive is merged directly into the preverbal position, the expletive strategy illustrated in (53) arises. The closest postverbal element with a phonological matrix ([Phon]) is moved preverbally, together with the categorial features ([CAT]), without pied-piping its semantic features ([SEM]) that remain in the postverbal position.

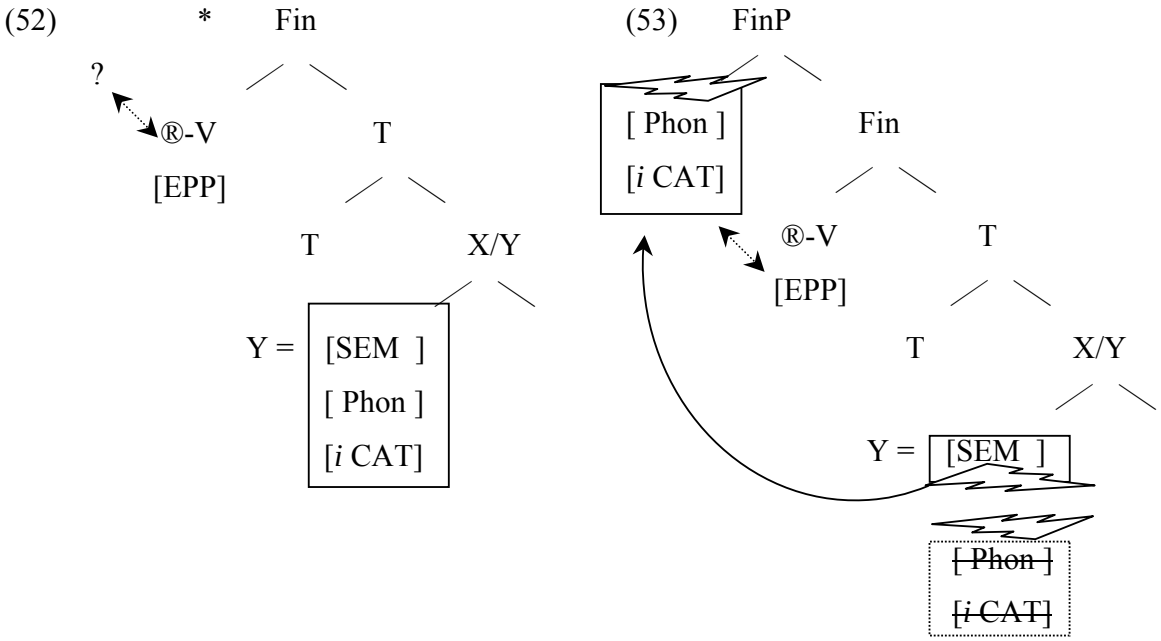

The syntactic operation illustrated in (53) indifferently targets heads and XPs. The last resort nature of EPP effects is obtained because expletive movement is triggered only in situations like (52), where the EPP is not satisfied by any other preverbal element. The semantic impact is null, that is it is equivalent to the merge of a free preverbal expletive. The fronted element is an expletive created in syntax by movement (Holmberg 2000). The preverbal element in (53) is a *light syntactic element* in the sense that it consists of a subset of features of the postverbal element Y. It is important to note that this derivation implies a view of grammar which is incompatible with the Lexical Integrity Hypothesis (Lapointe 1980) or the Atomicity Thesis (Di Sciullo and Williams 1987): the preverbal element in (53) is created by splitting the features of Y over two different (but local) syntactic positions[13]. In this sense, the preverbal element in (53) is a *light expletive* created in syntax by a local movement operation.

In the following sections, I will first examine and explain the splitting feature hypothesis first proposed by Holmberg (2000). I will next discuss and justify the hypothesis of the movement of a phonological matrix in syntax and point out the contrast with a PF operation. Finally, I will

[13] The Atomicity Thesis (Di Sciullo and Williams 1987): "Words are 'atomic' at the level of phrasal syntax and phrasal semantics. The words have 'features,' or properties, but these features have no structure, and the relation of these features to the internal composition of the word cannot be relevant in syntax." See Borer (1998) for discussion and overview.

justify the hypothesis of the categorial features first proposed by Rezac (2004). I will show that the phonological matrix hypothesis and the categorial feature hypothesis are not redundant, and I will expose the technical problems that still arise. The section closes on a discussion of alternative analyses.

4.1. Feature splitting and [-P] feature

As noted by Schafer (1995), the possible fronting of a past participle across the auxiliary in Breton recalls the facts of Stylistic Fronting in Icelandic and Faeroese, as illustrated in (54).

(54) Hver heldur þú að **stolið** hafi ___ hjólinu *Icelandic,* Holmberg (2005)
Who think you that stolen has the-bike
"Who do you think has stolen the bike?"

Stylistic Fronting in Icelandic has been extensively explored in the literature, and it is tempting to find parallels with Breton. The main difference between the two paradigms is that Stylistic Fronting occurs in subject gap positions or preverbal sites of impersonals, as illustrated in (55)a. and (56)a. Breton immediately contrasts with Icelandic because: (i) the canonical position of the Breton subject is postverbal, and Breton V-fronting is thus not related to subject gap positions (ii) the landing site of V-fronting is not SpecTP but SpecFinP, (iii) V-fronting is incompatible with high C heads as is not the case in (56).

(55) a. Hverju heldur þú ad **hann** hafi *stolid*
What think you that he has stolen
'What do you think he has stolen?'

b. * Hverju heldur þú ad **hann *stolid*** hafi ____ ?
What think you that he stolen has
'What do you think he has stolen?'

(56) a. Ef **gengið** er eftir Laugaveginum... *Icelandic,* Holmerg (2005)
if walked is along the-Laugavegur
'If one walks along Laugavegur...'

b. Ef **það** er **gengið** eftir Laugaveginum...
if EXPL is walked along the-Laugavegur
'If one walks along Laugavegur...'

Except for (iii), Breton and Icelandic paradigms both fall under the generalization that V-fronting occurs to prevent verb-first orders. The examples above show that V-fronting, as in Breton, is incompatible with a preverbal subject as in (55)b., and that it is incompatible with the merge of the expletive *það* in impersonal constructions as in (56)b. Moreover, Maling (1980) followed by Holmberg (2000, 2005) shows that Stylistic Fronting is not a process restricted to verbal heads, but a more general process that targets the closest postverbal element, irrespective of its X/XP status. Whenever an agent oriented adverb is merged in (57), this closest postverbal element becomes the sole possible target for expletive movement, triggering an intervention effect that bans V-fronting, as we saw was the case in Breton.

Holmberg (2000:450)

(57) a. sá sem **sennilega** hefur ~~sennilega~~ skrifað Þessa bók.
he that probably has probably written this book

b. sá sem **skrifað** hefur (*sennilega) ~~skrifað~~ Þessa bók.
he that probably has probably written this book

Holmberg (2005) reviews the properties of Stylistic Fronting, all recalling those of Breton previously exposed: (i) absence of narrow focus reading on the fronted element, (ii) complementary distribution with topicalization, (ii) complementary distribution with the merge of a preverbal expletive, (iv) the targeted element can be either a head or an XP, and (v) Stylistic Fronting fronts specifically the immediate postverbal element.

The feature splitting hypothesis has been developed by Holmberg (2000, 2005) in order to account for V-fronting paradigms in Icelandic and Faroese. It accounts for information packaging as well as for the fact that V-fronting is not filtered by the Head Movement Constraint (HMC). The Head Movement Constraint (Travis 1984) requires that no head moves across another c-

commanding head in syntax. The feature splitting hypothesis illustrated in (53) does not counter to the HMC because the moved element is never a head, but merely a subset of features of a head. The semantic features of the immediate postverbal element remain postverbal, as a separate subset of the features move into the preverbal position. This accounts for the null impact of expletive movement in information packaging. The fronted element is interpreted as if it had not moved because its semantic features really have not moved. It further predicts that this movement can target postverbal heads. Languages vary as to they allow for the splitting feature operation.
The following step is to identify the particular subset of features that compose a 'light expletive' and to propose a motivation for movement. Holmberg (2000, 2005) notes the extreme diversity of the fronted syntactic elements. He notes that the only property that preverbal elements seem to have in common is a phonological matrix. This generalization is encoded under an uninterpretable phonological feature [-P] on T. Strict locality of the movement is obtained by the Minimal Link Condition (MLC; Chomsky 1995), illustrated below.

(58) MLC : K attracts α if and only if there is no β,
β closer to K than α, such that K attracts β.

This formulation of the EPP is designed to target any element that provides the required phonological matrix. This targets indifferently heads or XPs, and excludes PRO, *pro*, traces as well as operators[14]. The [-P] hypothesis correctly predicts that the trace of the verb in T in (53) is not an intervener for Y. By parity of argument, a trace of an incorporated subject wouldn't count as an intervener for fronting.

4.2. The phonological matrix and PF

The [P-] hypothesis is workable only as far as we assume that phonological matrices of syntactic elements are accessible during the derivation, an assumption which is not theoretically neutral. I

[14] A quick point about terminology: by the term 'trace', I mean an element of a chain which does not have a phonological matrix at any time in the derivation, namely the foot of the chain and intermediate positions, by contrast to the head of a chain whose phonological matrix I assume is present in syntax. My assumptions follow Holmberg (2000, 2005): abstract phonological matrices are manipulated in syntax, and intermediate copies lack such a phonological matrix. I also assume that the head of a chain has such an abstract phonological matrix, regardless of its eventual phonetic realization (see section 4.2.).

wish to distinguish this hypothesis with a phonetic requirement. I show below that the abstract phonological matrix available during the derivation for EPP satisfaction can subsequently undergo phonological erasure. The sentence in (59) shows that a matrix particle satisfying the EPP in Welsh can remain unpronounced (see Awbery 2004, for other examples of unpronounced matrix particles in Welsh). In the Breton examples in (60), an element, if made salient in the previous discourse, can undergo topic-drop, without any additional expletive strategy.

(59) (Y) mae Siôn yn palu'r ardd. *Welsh,* Sainz (2001)
PRT is Siôn Prog. dig-the garden
'Siôn is digging the garden'.

(60) a. …ø a oa gwir ! *Breton,* Favereau (1997: 272)
® was right
'..., which was right'.

b. ... ø e veze tennet plouz berr. *Breton,* Gros (1996: 32)
® was pullen straw short
'...(then) we used to draw lots'.

My conclusion is that the phonological matrix targeted by [-P] can be absent at PF[15]. The relevant level at which the EPP is active is syntax, and EPP should not be understood as a PF requirement (contra Rivero 1999, 2000 among others). The Breton paradigm offers more evidence that EPP satisfaction has to be a syntactic effect, in contrast to a PF requirement. Going back to the topic-

[15] In Jouitteau (2004, 2005b:chap. 6), I illustrate a paradigm of preverbal subject drop in Atlantic Spoken French, which independently shows that phonological matrices of preverbal elements must be present before undergoing topic-drop. In Atlantic French, as illustrated below, a weak pronoun subject can be dropped.

(i) a. (Ils) ont joué du piano. Atlantic French
they have played of.the piano
'They played piano.'
b. /ilzɔ̃ʒwedupjano/ c. /zɔ̃ʒwedupjano/ d. */ɔ̃ʒwedupjano/

In (i)c, I show that the weak pronoun is erased at PF, but the /z/ liaison obligatory remains, showing that the liaison phonological process was prior to phonological erasure. In view of this, I assume that (59) and (60) can be derived by assuming that the fronted element that has satisfied the EPP had a phonological matrix at the relevant moment of the derivation, prior to phonological erasure.

drop examples in (60), the preverbal element absent from PF triggers different morphological realizations of the preverbal particle, which is realised as *a* in (60)a. and as *e* in (60)b. The following section shows that such an alternation can only be handled for in syntax.

4.3. Unvalued and underspecified categorial feature

The presence of categorial features in the preverbal element are evidenced by the behaviour of the preverbal particle *rannig* labelled '®' in my gloses, that shows morphological variation with respect to the syntactic category of its preceding element (see Anderson 1981, Urien 1989, 1999 among others). The morphological alternation of the *rannig* sheds light on the syntactic dimension of the relation between a preverbal element and the verbal complex. In the topic-drop examples above, the preverbal element has satisfied the EPP from the topic position at a level where syntactic categories are relevant, arguably no later than syntax.

The morphological alternation of the preverbal particle with respect to the category of the fronted element is also telling in wide focus sentences: it offers evidence that expletive movement fronts more than a phonological matrix. In my proposal in (53), a light expletive is constituted of a phonological matrix together with its categorial features. In any examples involving expletive movement in the above section 3, it can be verified that light expletives created from postverbal DPs trigger the *a* realization of the *rannig*, whereas light expletives created from non-nominal targets trigger the *e* realization of the preverbal particle[16]. Since the verbal complex is sensitive to the category of its preverbal element derived by expletive movement, there is evidence that, at least in Breton, light expletives created by expletive movement do contain an interpretable categorial feature. This categorial feature is pied-piped with the phonological matrix subsequent to feature splitting. Note that this is another sign that EPP effects are syntactic, and do not take place at PF: if EPP was to be treated as a PF phenomena, the PF interface would have to handle a [+/- D] distinction, and presumably an agreement phenomenon.

Rezac (2004) notes the morphological alternations of the Breton preverbal particle and proposes

[16] In some examples, the preverbal particle is not itself realized but we can still determine which form is used: the form *zo* of the verb 'to be' for example signals the *a* realization of the preverbal particle. Infinitive heads trigger the nominal like realization the preverbal particle. See Jouitteau (2005a, 2005b:chap 4) for the nominal behavior of verbal structures in Breton.

to formulate this alternation in terms of Agree. The morphological realization of the preverbal particle is the result of an agreement relation with the category of the preceding element (that is, in my analysis, the immediate postverbal element previous to movement). The Probe consists of an uninterpretable feature, unvalued for category, that requires checking from any element having an interpretable category. Like the [-P] feature, the [-CAT] feature uniformly finds its corresponding interpretable feature on the closest postverbal element. Could we reduce the EPP effects to an uninterpretable unvalued categorial feature and derive EPP effects without the hypothesis of a [-P] feature? I argue this is not the case because only the [-P] feature accounts for the fact that traces of movement are not eligible targets for the EPP.

The hypothesis of an unvalued categorial feature is not unproblematic. First, it relies on the notion of syntactic category. It is not clear to me if syntactic categories are a property of human language or merely the fruit of human linguists categorizing from a range of testable properties instantiated by syntactic elements. Aside from this theoretical point, implementation of the *rannig* variation in Standard Breton by agreement would call for a rather delicate derivational morphology. In (61), the fronted element is the nominal predicate whose denoted properties are applied to the subject via the copula. The form of the *rannig* is the *e* non-nominal form despite the nominal origin of the predicate. In terms of Agree; nominal features of the noun root *medecin*, 'doctor', must be invisible for the Probe in Fin.

(61) [Medisin] **ez e**o / ***a** zo Myriam
doctor **e**-is / ***a**-is Myriam
'Myriam is a doctor'

In the same line of argumentation, (62) shows fronting of a past participle together with its genitive proclitic. The verbal root of the fronted element could lead to think that the realization of the *rannig* would design a nominal category, as is the case for infinitive heads. However, the morphology of the *rannig* shows up in the *e* non-nominal form.

(62) [O lipet] **e**m eus ~~o lipet~~
CL-3PL.GEN leaked ®.1SG have CL-3PL.GEN leaked
'I have leaked them.'

In (61) and (62), the category of the minimal morphological root (both [+D]) have to become invisible in the process of the morphological derivation of the root. In terms of Agree, this means that we could not make the economy of postulating the intervening presence in (61) and (62) of a non-nominal categorial feature being interpretable in the fronted element. The null head that turns the DP into a predicate must have an interpretable categorial feature. Finally, any formulation of the EPP in terms of agreement has to stipulate that the type of agreement described can never be made at a distance, which designs it as a very peculiar Agree relation.

I consider in my schematized proposal in (53) that the preverbal light expletive of XP-VSO orders of Breton wide focus sentences consists at least of a phonological matrix and a categorial feature. The trigger for movement of the light expletive can be the sole [-P] feature that pied-pipes categorial features, deriving the fact that postverbal traces of movement are not interveners. I will now point on two other technical problems that any version of the feature-checking hypothesis has to face.

4.4. Two challenges for feature checking implementations of the EPP

Scenarios that obtain EPP effects by a feature checking mechanism, be it [-P], [- CAT], etc. all face the same problem: they have to assume a long-sighted effect. The problem is the following: the uninterpretable feature postulated on the inflected head must be able to find its corresponding interpretable feature in any postverbal element. Its corresponding interpretable feature crucially has to be found in any type of syntactic element (hence categorial feature or phonological feature). However, the uninterpretable feature seems blind to the interpretable features already present on its own site: the head on which it is encoded. Feature-checking scenarios for the EPP cannot avoid the stipulation that the uninterpretable feature is blind to the interpretable features of its own head.

The second challenge for any formulation of the final EPP is that EPP is not site dependent. The landing site of expletive movement is crosslinguistically far from clear. I assume that the Icelandic and Breton paradigms derive from the same effect, but Icelandic shows expletive movement in SpecTP, whereas Breton shows expletive movement in SpecFinP. The expletive movement landing site is dependent on the finite element, irrespective of its particular location in

a given language. Another problem concerning the landing site of expletive movement shows up in the Icelandic paradigm. The Icelandic light expletive is restricted to subject gap positions, and consequently appears in environments where the trace of the subject is supposed to be. It is thus far from clear that the landing site of expletive movement is a specifier. Identification of the preverbal landing site as a specifier would also be complicated by the fact that light expletives merely consist of subsets of features of a head in case of V-fronting. The Icelandic paradigm and the matrix C-VSO Brythonic orders independently show that the EPP effect cannot be equated with the projection of a preverbal specifier (contra Chomsky 2000, Lasnik 2001 or Bailyn 2004).
The crosslinguistic formulation of 'Final EPP' effects also has to account for the fact that EPP effects are not crosslinguistically site-dependent (contra the idea that EPP crosslinguistically affects SpecTP).

4.5. Some alternative accounts and their problems

Roberts and Roussou (2002) propose that the EPP consist of a variable in T that must be bound by either a realisation of the subject or an XP, triggering V2 order. V2 languages have a Fin head whose phonological realization is obligatory (noted Fin*). This forces the verb to move into Fin and the Tense variable in T needs to be bound by any pronounceable element in a Specifier. Recourse to binding is elegant because it subsumes the different pre-tense positions (SpecTP in Icelandic vs. SpecFinP in Brythonic). If the inflected head needs to be bound by a c-commanding element, the precise landing site is of no importance, as well as the particular syntactic status of the preverbal element (X vs. XP). Robert and Roussou's proposal recalls a similar intuition in Rivero (1994) or Borsley, Rivero and Stephens (1996) who consider that past participle fronting in Breton is a last resort process of licensing Tense, applying if nothing else has moved preverbally. However, I do not follow this proposal. First, I have shown that the PF realization of the EPP satisfier is not a relevant key factor (63), and second because it lacks the precise predictions that feature splitting makes for information packaging.
Bury (2002, 2003, 2005) proposes another scenario. He proposes that the bottom-up construction of the tree basically proceeds by iterative verbal reprojections and the verb is inserted fully inflected (Koeneman 1995, 2000). The verb can move higher by two processes: either it incorporates into a higher head, or it reprojects and self-attaches to the structure, creating

ambiguity on the spine of the tree. This is illustrated in (63), adapted from Bury (2002). In (63)a, the non-labelled *v* has moved out of the *v*P and is dominated by its *v* reprojection, a verbal category whose status is structurally ambiguous: it could be either an adjunction to *v*P or a maximal projection. In (63)b, the structure has been disambiguated via projection of a preverbal specifier, yielding a V2 structure.

Verbal reprojection and ambiguity for Linearization

(63)a.

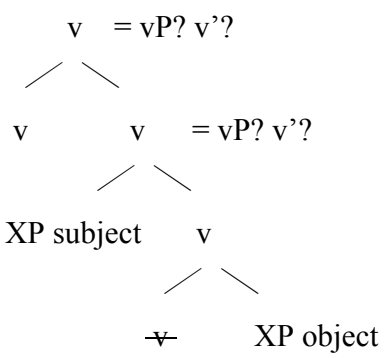

Projection of a specifier

b.

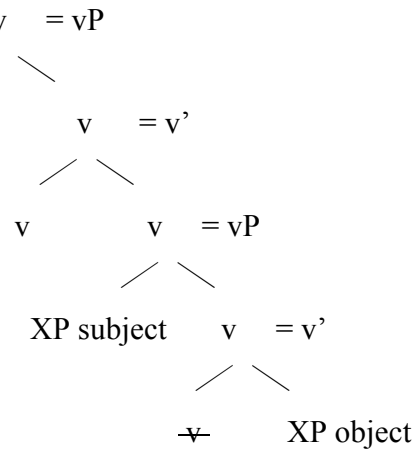

The intuition of the proposal is similar to that of Chomsky (2000), Lasnik (2001), or Bailyn (2004) whose versions of the EPP basically enforce the projection of a specifier. However, Bury's proposal also accounts for the absence of EPP effects in Celtic C-VSO orders, because incorporation of the inflected head into a matrix C head will not trigger reprojection of the verb and thus not trigger a desambiguization strategy. In this proposal, the absence of site-dependency for EPP effects nicely follows. I do not follow this hypothesis because, like the binding account, it fails to account for derivations where the preverbal head is not merged but moved, as is the case in V-fronting paradigms.

6. Conclusion

Welsh and Breton do not represent two different types of languages. Breton is a prototypical case of conspicuous V2, whereas Welsh is a prototypical case of inconspicuous V2.

Both languages show a ban on verb-first that recalls an EPP effect. The key difference between the two languages is exhaustively sent to (i) a lexical parameter (Welsh as a matrix C particle available for expletive insertion, whereas Breton has some C particles restricted to a closed set of verbs, and a preverbal expletive spelled out *bout*, *bet* or *bez*), and to (ii) the feature splitting parameter. Breton can resort to light expletives created by expletive movement whereas Welsh cannot.

The expletive movement hypothesis presents a typological advantage in providing a coherent and motivated picture of the derivation for Brythonic word orders. It also identifies the same syntactic effect in two different languages, namely Breton and Icelandic as described by Holmberg (2000, 2005). Advantages of the EPP analysis are also language internal: I have shown that the EPP accurately predicts pure verb-first sentences to be ungrammatical in Brythonic. Moreover, the EPP as developed here predicts exactly the preverbal element occurring in *wide focus* sentences in Breton for each derivation.

Finally, expletive movement resolves two paradoxes of Breton syntax. With regard to the derivation of V-fronting orders, all properties already observed in the literature are accounted for (wide focus reading, clause-boundedness, complementary distribution with Negation, topicalization and -Wh movement) and as well as new properties such as what element can intervene in the postverbal domain and consequently ban V-fronting. SVO unmarked orders are correctly predicted to instantiate exactly the same set of properties as V-fronting. The mysterious A properties of preverbal subject in the typical A-bar area are also accounted for: a preverbal subject in a Breton wide focus sentence answers positively the tests for A properties because its semantic features really are in an A position (the postverbal canonical A position of the subject). The literature is unclear about the qualification of the Breton preverbal site as an A position, because the A properties vanish for long extracted subjects. In the present proposal, preverbal A subjects in wide focus sentences are assumed without postulating a preverbal A position that would be available for long extracted subjects.

Further research is needed to find a correct implementation of the Extended Projection Principle that would account for the Brythonic ban on verb-first.

References

Anderson, Stephen R. 1981. "Topicalization in Breton". In *Proceedings of the Berkeley Linguistics Society,* 7, 27-39.

Anderson, Stephen R. and Sandra Chung. 1977. On Grammatical relations and clause structure in verb initial languages. In P.Cole and J.M.Sadock (eds.). *Syntax and semantics* 8, 1-25. New-York, Academic Press.

Awbery, Gwen. M. 2004. 'Clause-Initial Particles in Spoken Welsh', In G. R. Isaac (ed.), *Journal of Celtic Linguistics* vol. 8., School of Irish, National University of Ireland, Galway.

Bailyn, John F. 2004. 'Generalized Inversion', *Natural Language and Linguistic Theory* 22:1-44.

Boeckx, Cedric. 2000. *The EPP Eliminated*. ms, Uconn.

Borer, Hagit. 1998. 'Morphology and Syntax', In *The Handbook of Morphology*, Spencer, A. and Zwicky, A., Blackwell Publishers, 151-190.

Borsley, Bob M. Luisa Rivero and Janig Stephens. 1996. 'Long Head Movement in Breton'. In *The Syntax of Celtic languages: A comparative perspective*, ed. Robert D. Borsley and Ian Roberts, 53-74. Cambridge University Press.

Borsley, Robert D. & Andreas Kathol. 2000. 'Breton as a V2 language', In *Linguistics* 38, 665-710.

Borsley, Tallerman and Willis (eds.). 2007. *The Syntax of Welsh*, Cambridge University Press.

Borsley, Robert D. and Janig Stephens. 1989. Agreement and the position of subjects in Breton. in *Natural Languages and Linguistic Theory* 7, 407-427

Bošković, Zelko. 2002. 'A-Movement and the EPP', In *Syntax* 5:167-218.

Bošković, Zelko. 1997. *The Syntax of Non finite Complementation: an Economy Approach*. Cambridge, Mass.: MIT Press.

Bošković, Zelko. 1995. 'Participle Movement and second Position Cliticization in Serbo-Croatian', presentation at the Annual Meeting of the *Linguistic Society of America*, New Orleans.

Bury, Dirk. 2005. 'Preverbal Particles in Verb-Initial Languages', In *On the Syntax of Verb Initial Languages*, Carnie, A. and Harley, H. (eds.), Amsterdam/Philadelphia: John Benjamins Publishing Company.

Bury, Dirk. 2003. *Phrase Structure and Derived heads.* University College of London, PhD thesis.

Bury, Dirk. 2002. ‘A reinterpretation of the loss of verb-second in Welsh’, dans *Syntactic effects of Morphological Change,* D.W. Lightfooot (ed.), Oxford University Press, 215-231.

Burzio, Luigi 1986. *Italian Syntax: A Government and Binding Approach*. Dordrecht: Reidel.

Caink, Andrew. 1999. ‘Against Long Head Movement’, In M. Dimitrova-Vulchanova and L. Hellan (eds.), *Topics in South Slavic Syntax and Semantics*. Amsterdam: John Benjamins.

Chomsky, Noam. 2000. 'Minimalist Inquiries: The Framework’, dans *Step by Step: Essays in Minimalist Syntax in Honor of Howard Lasnik*, R.Martin, D. Michaels and J. Uriagereka, 89-155. Cambridge, MA. MIT Press.

Chomsky, Noam. 1995. *The Minimalist program*, MIT Press, Cambridge, MA.

Chomsky, Noam. 1986. *Barriers*, Linguistic Inquiry Monograph 13. MIT Press, Cambridge, Mass.

Chomsky, Noam. 1982. Some concepts and Consequences of the Theory of Government and Binding. MIT Press, Cambridge, Mass.

Cinque, Guglielmo. 1999. *Adverbs and Functiuonal Heads. A cross-Linguistic Perspective*. New York and Oxford, OUP.

Diesing, Molly. 1990. ‘Verb-movement and the subject position in Yiddish’, in *Natural Languages and Linguistic Theory* 8: 41-79.

Dobrovie-Sorin, Carmen. 1995. ‘Clitic Clusters in Rumanian: Deriving Linear Order from Hierarchical Structure’, dans *Advances in Roumanian Linguistics*, Cinque, g. & G. Giusti (eds.). John Benjamins.

Embick David, Roumyana Izvorsky. 1994. ‘On Long Head Movement in Bulgarian’, *Proceedings of ESCOL 12*.

Ernst, Thomas. 2002. *The Syntax of Adjuncts*. Cambridge, Cambridge University Press.

Favereau, Francis. 1997. *Yezhadur ar brezhoneg a-vremañ. - Modern Breton grammar*- Skol Vreizh.

Gerven, Youenn. 2002. ‘Eus ar Brezhoneg beleg d’ar brezhonegoù lennegel’, presentation 17/02/2002 for UGB and KEAV in Planwour (ms. 28/04/2002).

Gros, Jules. 1996. *Le Tresor du Breton Parlé*. Première partie, ‘Le langage figuré’. Emglev Breizh- Brud Nevez.

Guillevic and Le Goff. 1986. *Grammaire Bretonne du dialecte de Vannes.* Ar Skol Vrezoneg, Emgleo Breiz.

Halpern, Aaron. 1995. *On the Placement and Morphology of Clitics*, Stanford, CSLI Publications.

Halpern, Aaron. 1992. *Topics in the Placement and Morphology of Clitics*, ms. University of Stanford.

Harlow, Stephen.1981. 'Government and Relativisation in Celtic', in *Binding and Filtering*, F. Heny (ed.)Cambridge. Mass. MIT Press.

Hendrick, Randall. 1988. *Anaphora in Celtic and universal grammar*. Dordrecht: Kluwer.

Hendrick, Randall.1990. 'Breton pronominals, binding and barriers, in *The syntax of the modern Celtic languages,* Hendrick, R. (ed.), Syntax and semantics 23. San Diego: Academic Press.

Herrieu, Loeiz. 1994. *Kammdro an Ankou*, ed. Al Liamm.

Holmberg Anders. 2000. 'Scandinavian Stylistic Fronting: How Any Category Can Become an Expletive', *Linguistic Inquiry* vol.31, n3, summer 2000, 445-483

Holmberg, Anders. forthcoming. 'Stylistic Fronting', In H. van Riemsdijk and M. Everaert (eds.), *The Syntactic Companion.* Oxford: Blackwell.

Jouitteau, Mélanie. 2004. 'Gestures as Expletives, Multichannel Syntax of Spoken Languages', *WCCFL 23 Proceedings*, Cascadilla Press.

Jouitteau, Mélanie. 2005a. 'Nominal Properties of *v*Ps in Breton, implications for the typology of VSO languages', in *On the Syntax of Verb Initial Languages*, Carnie, A. and Harley, H. (eds.), Amsterdam/Philadelphia: John Benjamins Publishing Company.

Jouitteau, Mélanie. 2005b. *La Syntaxe Comparée du Breton*. PhD ms.

Jouitteau, Mélanie. (forthcoming). 'What Breton can Tell Us About the EPP? Investigations on SpecTP'. In *International Journal of Basque Linguistics and Philology,* Irurtzun, A and Ormazabal, J. (eds.), University Press of the University of the Basque Country, Bilbao/Donostia-San Sebastian, Spain.

Kervella, Fransez. 1995. *Yezhadur Bras ar Brezhoneg*. -(*the great grammar of Breton)*-Al Liamm (ed.), First edition 1947.

Koeneman, Olaf. 1995. *Flexible Phrase Structure: On the Role of Verbal Projections in Dutch English and Yiddish.* MA dissertation, Utrecht University.

Koeneman, Olaf. 2000. *The Flexible Nature of Verb Movement*. Doctoral dissertation, Utrecht University.

Lambova, Mariana. 2002. 'Is Head Movement syntactic? Evidence from Bulgarian'. *MIT*

Working Papers in Linguistics 43, 91-104.

Lapointe 1980. *A Theory of grammatical agreement.* PhD diss. University of Massachusetts, Amherst.

Lasnik, Howard. 2001. 'A note on the EPP', In *Linguistic Inquiry* 32.2.

Le Du, Jean. 2001. *Nouvel Atlas Linguistique de Basse-Bretagne*, vol. I et II. CRBC, Brest.

Le Roux, Pierre. 1927. *Atlas Linguistique de la Basse Bretagne*, Plihon-Hommay Rennes Paris.

Le Roux, Pierre. 1957. *Le verbe breton (Morphologie, Syntaxe)*, Librairie J. Plihon 5, rue Motte Fablet, Rennes. first edition 1947.

Luzel, François-Marie. 1971. *Gwerziou Breiz-Izel* (-Songs of Low-Brittany), Maisonneuve et Larose (ed.), Paris. vol. I. First edition 1868.

Maling Joan. 1980. 'Inversion in embedded clauses in Modern Icelandic', *Syntax and semantics* 24: Modern Icelandic Syntax, ed. Joan Maling and Annie Zaenen, 71-91, San Diego, Calif, Academic Press (1990).

Mantell, Olier. 2000. *Diazezoù ar yezhadur Gallaoueg* (-Basics of the Grammar of Gallo-), MA ms. University of Rennes/Roazhon II.

Manzini, Rita. 1992. *Locality. A Theory and Some of its Empirical Consequences*, Cambridge, MA. MIT Press.

Miyagawa, Shigeru. 2003. 'A-movement scrambling and options without optionality', In *Word Order and Scrambling*. S. Karimi. (ed.), Blackwell Publishers.

Phillips, Colin. 1996. *Order and Structure*, MIT Working Papers in Linguistics. (mention of pages refer here to the pdf. version of PhD manuscript).

Rivero, Maria Luisa. 2000. 'Finiteness and Second Position in Long Verb Movement Languages: Breton and Slavic', Borsley (ed.), *The Nature and Function of Syntactic Categories*, 295-323. Academic Press.

Rivero, Maria Luisa. 1999. 'Stylistic Verb Movement in Yes-No questions in Bulgarian and Breton" Kenesei ed., Benjamins (ed.), *Crossing Boundaries*, 67-90.

Rivero, Maria Luisa. 1994. 'Clause structure and verb movement in the languages of the Balkans', In *Natural Language and Linguistic Theory* 12: 63-120. Kluwer Academic Publishers, printed in the Netherlands.

Rezac, Milan. 2004. 'The EPP in Breton: an unvalued categorial feature.' In A. Breitbarth and H. van Riemdijk (Eds.), *Triggers*. Berlin, Mouton de Gruyter.

Roberts, Ian. 2005. *Principles and Parameters in a VSO language, a Case Study in Welsh*, Oxford Studies in Comparative Syntax, Oxford University Press.

Roberts, Ian. 1994. 'Two types of Head Movement in Romance', dans *Verb Movement*, Lightfoot & Hornstein (eds.), Cambrideg, Cambridge University Press, 207-242.

Roberts, Ian. 1992. *Verbs and Diachronic Syntax*. Kluwer, Dordrecht.

Roberts, Ian and Anna Roussou. 2002. 'The EPP as a condition on the Tense Dependency', in *Subjects, Expletives, and the EPP*, ed Svenonius, Oxford University Press.

Rouveret, Alain. 1996. *Bod* in the Present Tense and in Other Tenses. In Borsley, Robert D., and Ian Roberts (eds.), *The Syntax of the Celtic Languages: A Comparative Perspective.* Cambridge: Cambridge University Press. 125-171.

Rouveret, Alain. 1994. *Syntaxe du Gallois*, CNRS eds., Paris

Rouveret, Alain. 1990. 'X-bar theory, minimality and barrierhood in Welsh.' in *The syntax of the modern Celtic languages,* Hendrick, R. (ed.), Syntax and semantics 23. San Diego: Academic Press.

Sadler, Luisa. 1988. *Welsh Syntax: a Government-Binding Approach*. Croom Helm, London.

Sainz, Koldo. 2001. 'A Multi-causal approach to linguistic change: V2 to V1 and left-edge adjacency effects in Welsh', Abstract for Glow 2001.

Schafer, Robin. 1992. 'Negation and Verb Second in Breton.' Santa Cruz, UCSC unpublished manuscript.

Schafer, Robin. 1995. 'Negation and Verb Second in Breton.', in *Natural Languages and Linguistic Theory* 13, 135-172.

Schafer, Robin. 1997. 'Long Head Movement and Information Packaging in Breton'. in *Canadian Journal of Linguistics* 42(1-2): 169-203

Schapansky, Nathalie. 1999. 'Perspective nouvelle sur l'ordre V2 en Breton', dans *Proceedings of the 34th Linguistics Colloquium*, Germersheim, 189-197.

Schapansky, Nathalie. 1996. '*Negation, Referentiality and Boundedness in Breton, a case study in markedness and asymmetry*.' phD ms.

Schapansky, Nathalie.1992. 'The Preverbal Position in Breton and Relational Visibility.', dans *Working papers in Linguistics* 2, Burnaby SF

Sciullo, Anne-Marie and Williams, Edwin. 1987. 'On the Definition of Word', *Linguistic Inquiry Monograph* 14, Cambridge, Mass., MIT Press.

Stephens, Janig. 1990. 'Non-finite Clauses in Breton', dans *Celtic Linguistics*, Martin, Fife and Poppe, Amsterdam, john Benjamins.

Stephens, Janig.1983. 'Neutral Word Order in Breton.' présentation au *7th International Congress of Celtic Studies*.

Stephens, Janig.1982. *Word Order in Breton*. PhD Dissertation, London.

Stump, Gregory. 1984. 'Agreement versus incorporation in Breton', in *Natural Languages and Linguistic Theory* 2, 289-348.

Spencer, Andrew. 1991. *Morphological Theory*, Oxford: Blackwell.

Tallerman, Maggie. 1998. *Understanding Syntax*. London: Arnold.

Timm, Lenora. 1989. 'Word Order in 20th century Breton'. *Natural Languages and Linguistic Theory* 7: 361-378.

Timm Lenora.1991. 'The discourse pragmatics of NP-initial sentences in Breton'. In: J.Fife and E.Pope (eds.) *Studies in Brythonic word order*, 275-310. Amsterdam: Benjamins.

Tír na nÓg. 2000. (Breton Literature Magazine), Al Liam (ed.), Keltia Graphic. vol. 322.

Travis, Lisa. 1984. *Parameters and Effects of Word Order Variation*, PhD. dissertation, MIT.

Urien, Jean-Yves. 1999. 'Statut morphologique de la particule verbale.', dans *Breizh ha pobloù Europa, Bretagne et Peuples d'Europe*, mélanges en l'honneur de Per Denez, Lesneven: Hor Yezh, Rennes : Presses Universitaires de Rennes.

Urien, Jean-Yves. 1989. *La trame d'une langue, Le Breton. Présentation d'une théorie de la syntaxe et application* Lesneven: Mouladurioù Hor Yezh. (first edition 1987).

Urien, Jean-Yves. 1982-5. *Le schème syntaxique et sa marque. Application au Breton contemporain*, Doctorat d'Etat, Rennes 2, ANRT de Lille III.

Wilder, Chris and Damir Cavar. 1994. 'Long Head Movement? Verb Movement and cliticization in Croatian'. In: *Lingua* 93.1-58.

Willis, David. 1998. *Syntactic Change in Welsh, A study of the loss of verb-second*, Clarendon Press, Oxford.