HAL open science

Adaptive colour decorrelation for predictive image codecs

François Pasteau, Clément Strauss, Marie Babel, Olivier Déforges, Laurent Bédat

▶ **To cite this version:**

François Pasteau, Clément Strauss, Marie Babel, Olivier Déforges, Laurent Bédat. Adaptive colour decorrelation for predictive image codecs. European Signal Processing Conference, EUSIPCO, Aug 2011, Barcelona, Spain. pp.1-5. hal-00600354

HAL Id: hal-00600354

https://hal.science/hal-00600354

Submitted on 14 Jun 2011

HAL is a multi-disciplinary open access archive for the deposit and dissemination of scientific research documents, whether they are published or not. The documents may come from teaching and research institutions in France or abroad, or from public or private research centers.

L'archive ouverte pluridisciplinaire **HAL**, est destinée au dépôt et à la diffusion de documents scientifiques de niveau recherche, publiés ou non, émanant des établissements d'enseignement et de recherche français ou étrangers, des laboratoires publics ou privés.

ADAPTIVE COLOR DECORRELATION FOR PREDICTIVE IMAGE CODECS

François Pasteau, Clément Strauss, Marie Babel, Olivier Déforges, Laurent Bédat

IETR/Image group Lab
CNRS UMR 6164/INSA Rennes
20, avenue des Buttes de Coësmes
35043 RENNES Cedex, France
{fpasteau, cstrauss, mbabel, odeforge, lbedat}@insa-rennes.fr

ABSTRACT

When considering color images and more generally multi component images, state of the art image codecs usually achieve component decorrelation through static color transforms such as YUV or YCoCg. This approach leads to suboptimal results as statistics of the image are not taken into account. The new approach proposed here offers to remove the correlation of one component according to another adaptively during the prediction process of an image codec. Through two jointly used processes, one aiming at choosing the best predictor of a component and another aiming at improving the predictor's effectiveness, this new approach improves both image quality and compression ratio. This new technique has been applied to the LAR codec and shows an improvement over previous studies up to 20% in rate and 0.5db in PSNR at low bit rates.

1. INTRODUCTION

Despite the general use of color images, developement of image codecs such as JPEG, JPEG2K or the newly standardized JPEGXR has been primarily focused on giving the best performance on one component images. To handle color images, state of the art codecs usually rely on color transforms such as YUV, YCgCo and/or subsampling to achieve both good compression ratio and good visual quality. However after performing color transforms and/or subsampling each component is encoded independently without using the residual correlation still existing between components. In a previous study [1], we showed that using the RGB color space with an adaptive decorrelation and classification leads to better results than using static color transform such as YUV, YCgCo.

When considering lossless coding, coding techniques rely on statistical analyzes of the image to perform compression. As subsampling would cause losses, only reversible color transforms can be used. However, even after applying static color transforms, residual correlation still exists between components [1]. This underlaying correlation results in an suboptimal compression rate as decorrelation has been done statically without consideration of the image itself. A critical application of lossless coding of colour images concerns cultural digital libraries [2]. Museums actually try to safely digitalize their belongings and thus produce large quantities of lossless colour pictures. Current digital cameras are wide spread and generate high resolution colour images. Professional photographers tend to prefer lossless compression of their pictures to avoid artifacts due to image compression.

In this paper we present a new method for predictive codecs such as LAR, JPEGLS or H264 to improve both decorrelation and prediction processes of color images. This new method being completely reversible can be applied to both lossless and lossy coding.

This new method can be decomposed in two processes. First, adaptive decorrelation performed during the prediction process aimed at removing the residual correlation. A previous study [1] has shown good improvement over compression rate when applying such decorrelation after the prediction process. However using adaptive decorrelation during the prediction process improve the effectiveness of the predictor and therefore leads to both better compression rate and better quality.

In addition, inter component prediction aims at choosing the best fitted predictor for a component using information from another previously encoded component of the image.

The paper is organised as follows. The following section introduces the concept of inter-component prediction. In section 3 Adaptive decorrelation perfomed during prediction is explained. In section 4 both inter component prediction and adaptive decorrelation are jointly used. Finally an application of these two processes on the LAR codec is shown.

2. INTER COMPONENT PREDICTION

In this section we present an approach aiming at improving the prediction of a component using the best predictor of another previously encoded component. In order to propose algorithms and figures, notations described below need to be defined.

let Y be the first component of the image
let C be one of the other components of the image
let Y_i be the ith value of the Y component of the image
let $\widehat{Y_i}^j$ be the prediction of Y_i through predictor j
let $\widetilde{Y_i}^j$ be the reconstruction of Y_i through predictor j
let α_C be the decorrelation factor for the C component
let x' be x with adaptive decorrelation applied
let $modeprediction(Y_i, j)$ be the process returning $\widehat{Y_i}^j$
let $entropycoder(x)$ be the entropy coding of x
let $Q(x)$ return the value of x after quantization
let $Q^{-1}(x)$ return the value of x after inverse quantization
let $[x]_Q$ be $Q^{-1}(Q(x))$
let $sign(x)$ = -1 if $x < 0$, 1 otherwise
let $|x|$ be the absolute value of x

By applying different predictors from a predictor set on Y, selection of the best fitted to Y can be achieved. Therefore this predictor can be used on component C to obtain a better prediction. The Algorithm 1 explains the search for the best

predictor. The process corresponds to a minimization of the distance between $\widehat{Y}_i^j - \widetilde{Y}_i^0$ according to the norm 1.

Procedure 1 BestPrediction

Input: $Y_i;\widetilde{Y}_i^0$
Output: bp

$best = +\inf$
$bp = 0$
for all j **do**
  $\widehat{Y}_i^j = modeprediction(Y_i, j)$
  if $|\widehat{Y}_i^j - \widetilde{Y}_i^0| < best$ **then**
    $best = |\widehat{Y}_i^j - \widetilde{Y}_i^0|$
    $bp = j$
  end if
end for
{return the best predictor according to Y}
return bp

Predictor 0 corresponds to the predictor used on component Y. The effectiveness of such a method is highly dependent on the number of predictors and their effectiveness. To keep a low computational cost, the number of predictors should be kept low. Such process already exists in literature, for example in JPEGLS [3][4]. However the main advantage here is that the selection of the best predictor does not need to be transmitted to the decoder as the decoder can execute the same process. Therefore inter component prediction is cost free. As it involves modification of predictors, inter component prediction is also lossless.

As inter component prediction aims at choosing the right predictor for a component, an other approach would be to improve the effectiveness of the predictor by removing the residual correlation between Y and C. This approach is described in the next section.

3. ADAPTIVE DECORRELATION DURING PREDICTION PROCESS

In a previous study devoted to inter component decorrelation [1], we perform decorrelation as an independent process of the prediction scheme. By doing so, only the compression ratio is improved, as extra information given by the decorrelation process is not used to improve the prediction itself. Therefore, by performing adaptive decorrelation during the prediction process both compression ratio and quality can be improved in a single pass. Figure 1 represents the functional implementation of such a technique. The algorithm used to perform the decorrelation is presented in Algorithm 2.

In this algorithm prediction modes defined in section 2 are not used, so only predictor 0 is used on lines 7-8. On line 11 the adaptive decorrelation is performed on the predictor of component C. The predictor is decorrelated according to the reconstructed value of the prediction error of component Y. The α_C update process described on lines 15-27 is used to update the decorrelation factor at each iteration by computing a new barycenter of the set of points of coordinate $\{(\widetilde{C}_i'^0 - \widehat{C}_i^0; [\widehat{Y}_i^0 - \widetilde{Y}_i^0]_Q)\}$. To enable a correct behaviour at decoder side, $\widetilde{C}_i'^0$ has to be used as it is the only available reconstructed value at decoder side. However predictions computed before decorrelation $\widehat{C}_i^0$ are used instead of predictions after decorrelation $\widehat{C}_i'^0$ to ensure an acurate update of α_C. To avoid $D_C = 0$ we perform a point reflection on the points of coordinate $\{(x;y)|y < 0\}$ around the origin (0,0). Therefore only the absolute value of $[\widehat{Y}_i^0 - Y_i]_Q$ is taken into consideration in D_C. To ensure a locally adaptive decorrelation, we divide the numerator and denominator of α_C after cpt iterations. The number of iterations and the divider of the numerator and denominator have been empirically evaluated.

Algorithm 2 Adaptive Decorrelation Algorithm

1: {Initialization}
2: $cpt = 0$
3: $N_C = 0$
4: $D_C = 0$
5: $\alpha_C = 0$
6: **for all** i **do**
7: $\widehat{Y}_i^0 = modeprediction(Y_i, 0)$
8: $\widehat{C}_i^0 = modeprediction(C_i, 0)$
9: $\widetilde{Y}_i^0 = \widehat{Y}_i^0 + [\widehat{Y}_i^0 - Y_i]_Q$
10:
11: {Adaptive Decorrelation on predictor}
12: $\widehat{C}_i'^0 = \widehat{C}_i^0 + \alpha_C \times [\widehat{Y}_i^0 - \widetilde{Y}_i^0]_Q$
13: $\widetilde{C}_i'^0 = \widehat{C}_i'^0 + [\widehat{C}_i'^0 - C_i]_Q$
14:
15: {α_C update}
16: **if** $D_C > 0$ **or** $[\widehat{Y}_i^0 - \widetilde{Y}_i^0]_Q \neq 0$ **then**
17: $N_C = N_C + (\widetilde{C}_i'^0 - \widehat{C}_i^0) \times sign([\widehat{Y}_i^0 - \widetilde{Y}_i^0]_Q)$
18: $D_C = D_C + |[\widehat{Y}_i^0 - \widetilde{Y}_i^0]_Q|$
19: $\alpha_C = N_C / D_C$
20: $cpt = cpt + 1$
21:
22: {Ensure local adaptation}
23: **if** $cpt > 1000$ **then**
24: $N_C = N_C / 4$
25: $D_C = D_C / 4$
26: $cpt = 0$
27: **end if**
28: **end if**
29: $entropycoder(Q(\widehat{Y}_i^0 - \widetilde{Y}_i^0))$
30: $entropycoder(Q(\widehat{C}_i'^0 - \widetilde{C}_i'^0))$
31: **end for**

As adaptive decorrelation can be realised at both encoder and decoder side, the process itself is costfree. Moreover, due to this symmetric process, adaptive decorrelation is also lossless. As the adaptive decorrelation and inter component prediction are two independent processes, they can be jointly used to achieve even better results. The next section explains how this two different approaches can be combined.

4. ADAPTIVE DECORRELATION AND INTER COMPONENT PREDICTION JOINT CODING

In this section adaptive decorrelation and inter component prediction are jointly used to improve prediction and therefore quality and compression ratio. On figure 2 one can see changes compared to figure 1. Firstly the predictor used for the C component comes from the best predictor process explained in section 2, as described on line 12 on alg. 3. As the

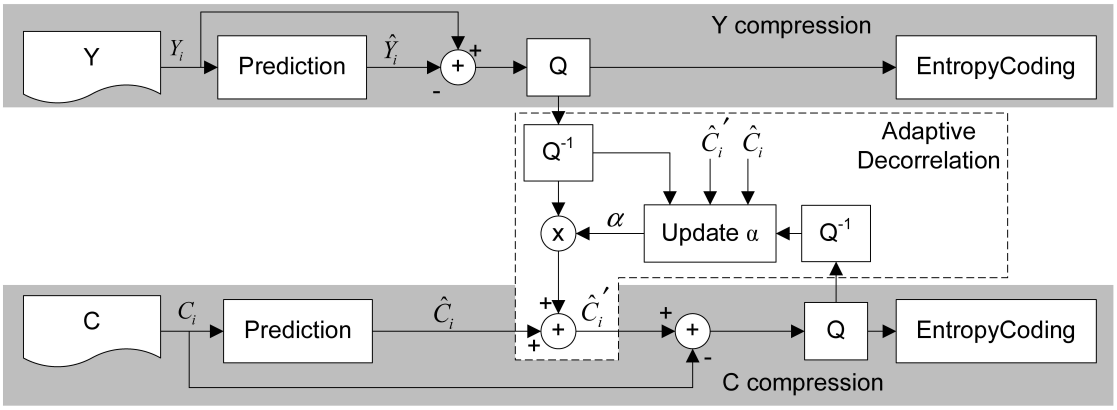

Figure 1: Adaptive Decorrelation during Prediction Scheme

predictors on Y and C are different we need to evaluate $\widehat{Y}_i^{bp}$ in order to be able to apply adaptive decorrelation and correct the predictor on C according to Y. Therefore the decorrelation process is performed using the error between $\widetilde{Y}_i^0$ and $\widehat{Y}_i^{bp}$ as shown on line 16. For the same reason $(\widetilde{Y}_i^0 - \widehat{Y}_i^{bp})$ needs to be used during the α_C update process on lines 20-22.

Adaptive Decorrelation and Inter-component Prediction rely on improving predictors and are independant of the actual coding scheme, therefore they can be applied to any predictive codec such as LAR, H264. To evaluate their performances both Adaptive Decorrelation and Inter-component Prediction have been implemented in the LAR codec. The next section presents an overview of the LAR codec as well as results coming from the implementation of both approaches presented in this paper.

Algorithm 3 Adaptive Decorrelation with Inter-component Prediction Algorithm

1: {Initialisation}
2: $cpt = 0$
3: $N_C = 0$
4: $D_C = 0$
5: $\alpha_C = 0$
6: **for all** i **do**
7: {Y compression}
8: $\widehat{Y}_i^0 = modeprediction(Y_i, 0)$
9: $\widetilde{Y}_i^0 = \widehat{Y}_i^0 + [\widehat{Y}_i^0 - Y_i]_Q$
10:
11: {Inter-component Prediction (Proc. 1)}
12: $bp = BestPrediction(Y_i, \widetilde{Y}_i^0)$
13: $\widehat{Y}_i^b p = modeprediction(Y_i, bp)$
14:
15: {C compression}
16: $\widehat{C}_i^{bp} = modeprediction(C_i, bp)$
17: $\widehat{C}_i'^{bp} = \widehat{C}_i^{bp} + \alpha_C \times (\widehat{Y}_i^{bp} - \widetilde{Y}_i^0)$
18: $\widetilde{C}_i'^{bp} = \widehat{C}_i'^{bp} + [\widehat{C}_i'^{bp} - C_i]_Q$
19:
20: {α_C update}
21: **if** $D_C > 0$ **or** $[\widehat{Y}_i^{bp} - \widetilde{Y}_i^0]_Q \neq 0$ **then**
22: $N_C = N_C + (\widetilde{C}_i'^{bp} - \widehat{C}_i^{bp}) \times sign(\widehat{Y}_i^{bp} - \widetilde{Y}_i^0)$
23: $D_C = D_C + |\widehat{Y}_i^{bp} - \widetilde{Y}_i^0|$
24: $\alpha_C = N_C / D_C$
25: $cpt = cpt + 1$
26:
27: {Ensure local adaptation}
28: **if** $cpt > 1000$ **then**
29: $N_C = N_C / 4$
30: $D_C = D_C / 4$
31: $cpt = 0$
32: **end if**
33: **end if**
34: $entropycoder(Q(\widehat{Y}_i^0 - \widetilde{Y}_i^0))$
35: $entropycoder(Q(\widehat{C}_i'^{bp} - \widetilde{C}_i'^{bp}))$
36: **end for**

5. APPLICATIONS

5.1 LAR overview

The basic concept of the LAR method [5] is that local resolution should be adapted to suit local activity. Also assuming that an image consists of global information and local texture, we firstly proposed a two-layer, content-based codec, both relying on a Quadtree partition. The first layer, called the FLAT LAR, encodes the global information at block level representation. The additional second layer enables texture compression within blocks. Therefore, the method provides natural SNR scalability. The block sizes are estimated through a local morphological gradient. The direct consequence is that the smallest blocks are located round the edges whereas large blocks map homogeneous areas. This being so, the main feature of the FLAT coder consists of preserving contours while smoothing homogeneous parts of the image.

The JPEG normalization group has recently proposed a call for proposals on JPEG-AIC (Advanced Image Coding) in order to look for new solutions for still image coding techniques [6]. The LAR codec has recently been proposed as an answer.

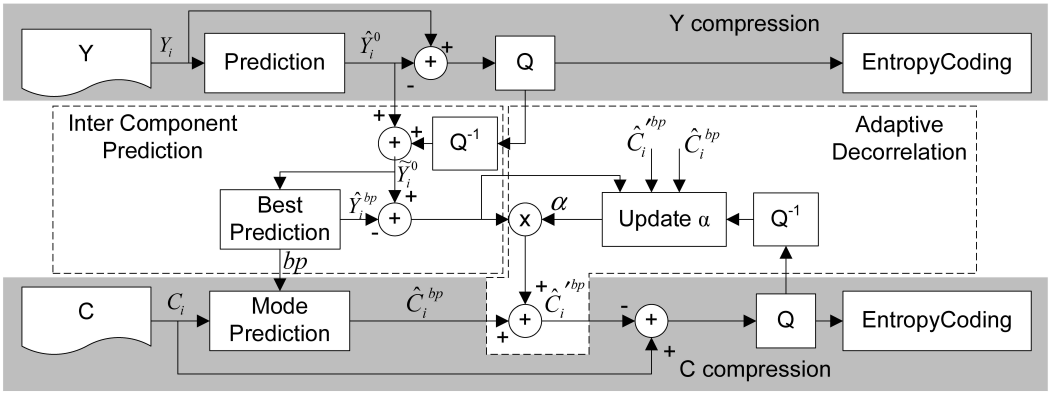

Figure 2: Adaptive Decorrelation during Prediction Scheme with Inter Component Prediction

5.2 Interleaved S+P

The S+P transform (S-transform + Prediction) is based on the 1D S-transform applied on the 2 vectors formed by 2 diagonally adjacent pixels in a 2x2 block as depicted in figure 3. Let z_0 and z_1 denote the S-transformed coefficients and (u_0, u_1) be the couple of values, we have:

$$\left| \begin{array}{l} z_0 = \lfloor (u_0 + u_1)/2 \rfloor, \\ z_1 = u_1 - u_0. \end{array} \right. \quad (1)$$

The prediction is achieved in 3 successive passes. If $i \in \{0,1\}$ and $k \in \{1,2,3\}$, z_i^k constitutes the z_i coefficient coded through the kth pass. Let I be the original image of size $N_x \times N_y$. The multiresolution representation of an image is described by the set $Y_{l=0}^{lmax}$, where l_{max} is the top of the pyramid and l = 0 the full resolution image. Four blocks $\frac{N}{2} \times \frac{N}{2}$ are gathered into one block $N \times N$ valued by the average of the two blocks of the first diagonal (first S-pyramid on figure 4) The transformation of the second diagonal of a given 2×2 block can also be seen as a second S-pyramid, where the pixel values depend on the ones existing at the lower level of the first S-pyramid. Interleaving is in this way realised.

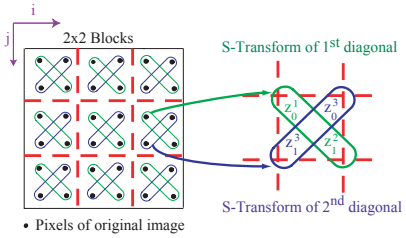

Figure 3: S-Transform scheme

6. RESULTS

Interleaved S+P version [7] of the LAR codec has been used as reference codec to implement both adaptive decorrelation and inter prediction. As we showed in a previous study [1] that using the RGB color space with an adaptive decorrelation and classification leads to better results than using static color transform, the RGB color space was

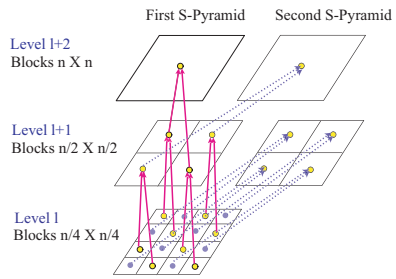

Figure 4: S-Pyramid scheme

used during the benchmark. The image set is composed of 10 images coming from the second core experiment of JPEG-AIC (bike_crop, cafe_crop, p06_crop, p10_crop, rokounji_crop, p26_crop, zoo_crop, green_crop, northcoast_crop, woman_crop)[8]. The resolution of these images is 2 megapixels in 24 bit color depth. Compressions were performed with different quantization values from lossless Q=1 to Q=32. To implement inter prediction, basic predictor directly using the value of the neighborhood were used. Table 1 presents average quality results using the WPSNR_MSE metric [9] in db, table 2 presents average rate results in bit per point (bpp).

Column named *Alone* references to the LAR codec itself, *Decorrelation after prediction* references to the method explained in [1], *Inter prediction* references to the method presented in section 2, *Decorrelation during prediction* references to the method presented in section 3 and finally *(1)+(2)* references to both methods jointly used. Results presented here aims at showing how these processes impact quality and compression rate of the LAR codec itself. Therefore performance of the LAR codec alone compared to other state of the art codecs are not presented. However comparisons between JPEG2K and LAR codec with previous adaptive decorrelation can be found in [1].

Firstly, one might observe on table 1 that quality results with or without decorrelation after prediction are strictly the same. This behavior is expected as applying the decorrelation after the prediction does not have an impact on the predictors therefore does not improve the quality. Quality increase for the inter prediction scheme is really small and only

Quantization	Alone	Decorrelation after prediction	Inter Prediction (1)	Decorrelation during prediction (2)	(1) + (2)
Q = 4	42.709	42.709	42.709	**42.813**	**42.813**
Q = 8	38.289	38.289	38.289	**38.494**	**38.494**
Q = 32	30.148	30.148	30.149	30.715	**30.716**

Table 1 : Quality results of proposed methods in PSNR (db)

Quantization	Alone	Decorrelation after prediction	Inter Prediction (1)	Decorrelation during prediction (2)	(1) + (2)
Q = 1	13.599	12.092	13.596	12.092	**12.091**
Q = 4	6.6723	5.9031	6.6696	5.4472	**5.4467**
Q = 8	4.4755	3.9891	4.4728	3.5204	**3.5198**
Q = 32	1.5075	1.4064	1.5055	1.1070	**1.1064**

Table 2 : Rate results of proposed methods in bit per point (bpp)

noticeable at high quantization Q = 32. This behavior is also expected as basic predictors were used and the efficiency of this process is highly related to the number and the quality of these predictors. However applying adaptive decorrelation during the prediction process improves the quality up to 0.56 db at high quantization. Using jointly decorrelation during prediction and inter prediction does not improve the quality beyond the result obtained only with decorrelation during prediction.

When considering rate results from table 2 one might observe that improvements in compression rate coming from the inter prediction are really small for the reasons explained previously. In a lossless context (Q=1), both decorrelation after prediction and on predictor produce the same results. This behavior is expected as without quantization these two schemes are functionally equivalent. However when considering lossy compression, adaptive decorrelation during prediction produces better results and achieve a gain up to 0.4 bpp (20%) for high quantization (Q=32). Using both inter prediction and adaptive deccorelation during prediction does not noticeably improve the results.

Adaptive decorrelation during prediction alone improves both quality and compression rate in all cases. Considering that in a previous study [1], adaptive decorrelation after predicton with RGB color space showed the best results, applying this new decorrelation instead should improve results even more.

7. CONCLUSION

In this paper, two new approaches of multi component image compression have been presented. Firstly, inter-component prediction was described. This process aims at finding the best fitted predictor for a component using another already encoded component. Secondly, adaptive decorrelation during the prediction process was presented. This methods aims at improving predictors from one component using prediction errors from another component. In section 4, both methods were jointly used. Finally results on the LAR codec were shown. Concerning the inter prediction process, small improvements in compression and quality have been observed, however concerning adaptive decorrelation during prediction improvements up to 20% in rate and 0.5 db in PSNR have been realised.

Future works will aim at implementing this new adaptive decorrelation with the classification presented in [1] and then compare results with state of the art codecs. Also work on the predictor set to improve inter prediction will be realised.

Acknowledgement: this work is supported by the French National Research Agency as part of the CAIMAN project (ANR-08-VERS-002).

REFERENCES

[1] F. Pasteau, C. Strauss, M. Babel, O. Déforges, and L. Bédat. Improved Colour Decorrelation for Lossless Colour Image Compression using the LAR Codec. In *Proc. of the 17th European Signal Processing Conference (Eusipco 2009)*, pages 2122–2126, Glasgow, Scotland, August 2009.

[2] G. F. MacDonald. Digital visionary. *Museum News*, 79:34–41, March/April 2000.

[3] M. J. Weinberger, G. Seroussi, and G. Sapiro. LOCO-I: A low complexity, context-based, lossless image compression algorithm. In *Proc. on Data Compression conference*, pages 140–149, Snowbird, UT, March 1996.

[4] M. J. Weinberger, G. Seroussi, and G. Sapiro. From LOCO-I to the JPEG-LS Standard. In *Proc. on Image processing, ICIP*, volume 4, pages 68–72, 1999.

[5] O. Déforges, M. Babel, L. Bédat, and J. Ronsin. Color LAR Codec: A Color Image Representation and Compression Scheme Based on Local Resolution Adjustment and Self-Extracting Region Representation. *IEEE Trans. on Circuits and Systems for Video Technology*, 17(8):974–987, August 2007.

[6] Jpeg-aic : scope and evaluation. *International Standards Organization working document, ISO/IEC SC29/WG 1/N4326*, 2007.

[7] M. Babel, O. Deforges, and J. Ronsin. Interleaved S+P Pyramidal Decomposition with Refined Prediction Model. In *ICIP*, volume 2, pages 750–753, October 2005.

[8] AIC core experiment on evaluation of LAR proposal (CO-LAR-02). *International Standards Organization working document, ISO/IEC SC29/WG 1/N5596*, 2010.

[9] Francesca De Simone, Daniele Ticca, Frederic Dufaux, Michael Ansorge, and Touradj Ebrahimi. A comparative study of color image compression standards using perceptually driven quality metrics. In *Proceedings of SPIE*, pages 70730Z–70730Z–11, San Diego, CA, USA, 2008.