HAL
open science

# Bounds and complexity results for strong edge colouring of subcubic graphs

Hervé Hocquard, Pascal Ochem, Petru Valicov

## To cite this version:

Hervé Hocquard, Pascal Ochem, Petru Valicov. Bounds and complexity results for strong edge colouring of subcubic graphs. EuroComb'11, Aug 2011, Budapest, France. A paraitre. hal-00592130

**HAL Id: hal-00592130**

**https://hal.science/hal-00592130v1**

Submitted on 11 May 2011

**HAL** is a multi-disciplinary open access archive for the deposit and dissemination of scientific research documents, whether they are published or not. The documents may come from teaching and research institutions in France or abroad, or from public or private research centers.

L'archive ouverte pluridisciplinaire **HAL**, est destinée au dépôt et à la diffusion de documents scientifiques de niveau recherche, publiés ou non, émanant des établissements d'enseignement et de recherche français ou étrangers, des laboratoires publics ou privés.

# Bounds and complexity results for strong edge colouring of subcubic graphs [1]

Hervé Hocquard [2]

*LaBRI*
*Université de Bordeaux*
*33405 Talence Cedex, France*

Pascal Ochem [3]

*LRI - CNRS*
*Université Paris-Sud 11*
*91405 Orsay Cedex, France*

Petru Valicov [4]

*LaBRI*
*Université de Bordeaux*
*33405 Talence Cedex, France*

**Abstract**

A strong edge colouring of a graph $G$ is a proper edge colouring such that every path of length 3 uses three colours. In this paper, we give some upper bounds for the minimum number of colours in a strong edge colouring of subcubic graphs as a function of the maximum average degree. We also prove the NP-completeness of the strong edge $k$-colouring problem for some restricted classes of subcubic planar graphs when $k = 4, 5, 6$.

*Keywords:* strong edge colouring, subcubic graphs, maximum average degree, NP-completeness.

[1] This research is supported by the ANR/NSC GraTel ANR-09-blan-0373-01 and NSC99-2923-M-110-001-MY3 and the ANR GRATOS ANR-09-JCJC-0041-01.

[2] Email: `hocquard@labri.fr`
[3] Email: `ochem@lri.fr`
[4] Email: `valicov@labri.fr`

## 1 Introduction

In this paper the graphs we consider are finite, without multiple edges and without loops. A proper edge colouring of a graph $G = (V, E)$ is an assignment of colours to the edges of the graph such that two adjacent edges do not use the same colour. A *strong edge colouring* (called also distance 2 edge colouring) of a graph $G$ is a proper edge colouring of $G$, such that every edge of a path of length 3 $uvxy$ uses a different colour. We will say that a graph is strongly edge $k$-colourable if it admits a strong edge colouring using at most $k$ colours. We denote by $\chi'_s(G)$ the *strong chromatic index* of $G$ which is the smallest integer $k$ such that $G$ can be strong edge coloured with $k$ colours. The *girth* of a graph is the size of a shortest cycle in this graph. We will say that two edges $uv$ and $xy$ ($u \neq y$) are at distance 2 if there exists a path of length 3 $uvxy$.

The notion of strong edge colouring seems to be introduced by Fouquet and Jolivet in [7,8]. This type of colouring can be used to represent the conflict-free channel assignment in radio networks. The goal is to assign frequencies (colours) to channels (edges) between every pair of transceivers (vertices) communicating between each other. Frequencies have to be assigned to edges according to interference constraints and this can be translated in terms of strong edge colouring of the graph modelling the network. For a brief survey, we refer the reader to [4,6].

Let $\Delta$ denote the maximum degree of a graph. In 1985, during a seminar in Prague, Erdős and Nešetřil gave a construction of graphs having strong chromatic index equal to $\frac{5}{4}\Delta^2$ when $\Delta$ is even and $\frac{1}{4}(5\Delta^2 - 2\Delta + 1)$ when $\Delta$ is odd. They conjectured that the strong chromatic index is bounded by these values and it was verified for $\Delta \leq 3$. It was conjectured by Faudree *et al.* [1] that every bipartite graph has a strong edge colouring with $\Delta^2$ colours. In [2] the same authors stated a new conjecture, claiming that the strong chromatic index of planar subcubic graphs is at most 9 and proved that $\chi'_s(G) \leq 4\Delta + 4$, for planar graphs with maximum degree $\Delta \geq 3$. Let $\mathrm{mad}(G)$ be the maximum average degree of the graph $G$ *i.e.* $\mathrm{mad}(G) = \max\left\{\frac{2|E(H)|}{|V(H)|},\ H \subseteq G\right\}$, where $V(H)$ and $E(H)$ the sets of vertices and edges of $H$, respectively.

In this paper we study the bounds of the strong chromatic index of subcubic graphs considering their maximum average degree.

Mahdian proved in [5] that deciding whether a bipartite graph with girth $g$, for any fixed $g$, is strongly edge $k$-colourable, for all $k \geq 4$, is NP-complete, the case when $k \leq 3$ being trivial. In this paper we prove the NP-completeness of the problems of deciding whether a planar subcubic bipartite graph can be strong edge coloured with four, five and six colours, for some values of the girth.

## 2 Bounds of $\chi'_s(G)$ in terms of $\mathrm{mad}(G)$

We prove the following results:

**Theorem 2.1** *Let $G$ be a subcubic graph:*

1. *If* $\mathrm{mad}(G) < \frac{15}{7}$, *then* $\chi'_s(G) \leq 6$.
2. *If* $\mathrm{mad}(G) < \frac{27}{11}$, *then* $\chi'_s(G) \leq 7$.

*3. If* $\mathrm{mad}(G) < \frac{13}{5}$*, then* $\chi'_s(G) \leq 8$*.*

*4. If* $\mathrm{mad}(G) < \frac{36}{13}$*, then* $\chi'_s(G) \leq 9$*.*

In order to show the tightness of our result, we consider the function $f(n) = \inf\{\mathrm{mad}(G) \mid \chi'_s(G) > n, \Delta(G) \leq 3\}$. Obviously, $f(5) = 2$, and we prove that for $n = 6$ $(7, 8, 9$ resp.): $\frac{45}{21} < f(6) \leq \frac{49}{21}$ , $\frac{54}{22} < f(7) \leq \frac{55}{22}$ , $\frac{91}{35} < f(8) \leq \frac{100}{35}$ , $\frac{252}{91} < f(9) \leq \frac{260}{91}$.

The proof of Theorem 2.1 is done by using the method of reducible configurations and the discharging technique. Here is the sketch of the proof. In each of the cases 1, 2, 3 and 4, for the minimum counterexample $H$, we prove the existence of some reducible configurations *i.e.* a set $\mathcal{S}$ of subgraphs which cannot appear in $H$. Once the non-existence of $\mathcal{S}$ is proven, we define the weight function $\omega : V(H) \to \mathbb{Q}$ with $\omega(x) = d(x) - m$ (where $m = \frac{15}{7}$ in Case 1, $\frac{27}{11}$ in Case 2, $\frac{13}{5}$ in Case 3 and $\frac{36}{13}$ in Case 4). It follows from the hypothesis on the maximum average degree that the total sum of weights is strictly negative. In the next step, we define discharging rules to redistribute weights and once the discharging is finished, a new weight function $\omega^*$ will be produced. During the discharging process the total sum of weights is kept fixed. Nevertheless, by the non-existence of $\mathcal{S}$, we can show that $\omega^*(x) \geq 0$ for all $x \in V(H)$. This leads to the following contradiction:

$$0 \leq \sum_{x \in V(H)} \omega^*(x) = \sum_{x \in V(H)} \omega(x) < 0$$

and hence, this counterexample cannot exist.

## 3 NP-completeness

The STRONG EDGE $k$-COLOURING problem is defined as follows:

INSTANCE: A graph $G$ and a positive integer $k$.

QUESTION: Does $G$ have a strong edge colouring with $k$ colours?

The 3-COLOURING problem is defined as follows:

INSTANCE: A graph $G$.

QUESTION: Does $G$ have a proper vertex colouring with three colours?

3-COLOURING was proven to be NP-complete even when restricted to planar graphs of maximum degree 4 [3].

**Theorem 3.1** *STRONG EDGE 4-COLOURING is NP-complete for planar bipartite graphs of maximum degree 3, with an arbitrarily large girth.*

**Proof** The problem is clearly in NP since it can be checked in polynomial time whether a given assignment of colours to edges is a strong edge colouring. We will prove the theorem by reducing 3-COLOURING of planar graphs of degree 4.

First let us observe that in a strong edge 4-colouring of the graph of Figure 1, the edges $xy, zt$ must receive the same colours. By glueing several copies of this graph as shown in Figures 2(a), 2(b), we can increase the distance between the edges that must be coloured the same. Moreover, by choosing an odd or an even number of

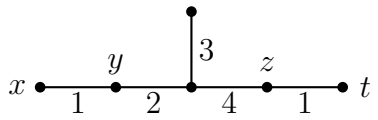


Figure 1. Forcing a colour

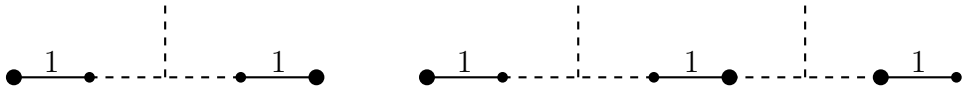


(a) Odd number of claws (b) Even number of claws

Figure 2. Transportation of a color

copies of the graph of Figure 1, we may force the two end vertices of the constructed graph to be in a same or in different parts of a natural bipartition of the graph. In Figures 2(a) and 2(b), the bipartitions are given by small and big vertices.

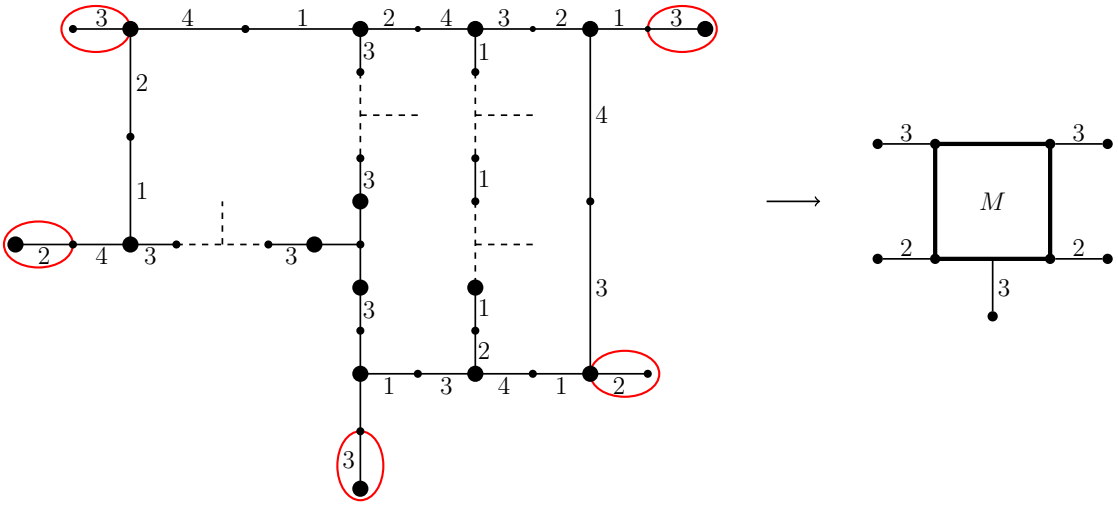


Figure 3. Sub-gadget $M$

Now, we are ready to build the generic sub-gadget $M$ (Figure 3) which will be used in our reduction. It can be checked by case analysis that up to permutation of colours, the strong edge 4-colouring of $M$, given in Figure 3, is unique. Also $M$ is bipartite (the bipartition is given in the picture by big and small vertices) and of arbitrarily large girth.

Given a planar graph $G$ with maximum degree 4, we construct a graph $G'$ as follows. Every vertex $v$ of $G$ is replaced by a copy $Q_v$ of the graph $Q$ depicted in Figure 4(a) which contains three copies of the sub-gadget $M$. Note that since $M$ is bipartite and of arbitrarily large girth, $Q$ is also bipartite and of arbitrarily large girth.

For every edge $uv$ in $G$, we choose an index $i$ for $Q_u$ and $j$ for $Q_v$ and join $x_i$ of $Q_u$ with $x_j$ of $Q_v$ and one of the vertices $y_i^1$, $y_i^2$ with one of the vertices $y_j^1$, $y_j^2$. These connections are done using an arbitrarily large number of claws as depicted in Figure 4(b). It is easy to observe that we can make the choice of connections such that the obtained graph is planar. Furthermore, by construction the obtained graph $G'$ is bipartite and of arbitrarily large girth.

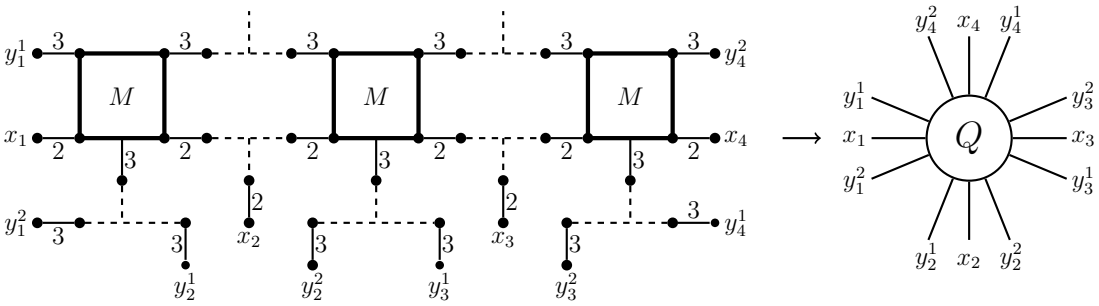


(a) Vertex gadget $Q$

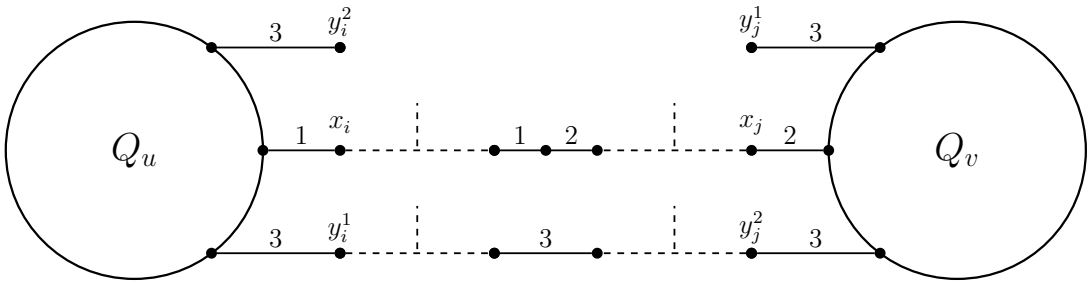


(b) Connecting two vertex gadgets in $G'$

Figure 4. Vertex and edge gadgets

We say that the *colour of* $Q$ is the colour of the edges incident to the vertices $x_i$ in $Q$ (colour 2 in Figure 4(a)). Also, the *forbidden colour of* $Q$ is the colour of the edges incident to $y_i^1$ and $y_i^2$ (colour 3 in Figure 4(a)).

Figure 4(b) shows that for every edge $uv \in G$, $Q_u$ and $Q_v$ are assigned distinct colours and the same forbidden colour. Since $G$ is connected, all copies of $Q$ have same forbidden colour, say 3, and thus no copy of $Q$ is coloured 3.

If $G$ is 3-colourable, then for every vertex $v \in G$, we can assign the colour of $v$ to $Q_v$ and extend this to a strong edge 4-colouring of $G'$. Conversely, given a strong edge 4-colouring of $G'$, we obtain a 3-colouring of $G$ by assigning the colour of $Q_v$ to the vertex $v$. So $G'$ is strong edge 4-colourable if and only if $G$ is 3-colourable, which completes the proof.

□

3-COLOURING of planar graphs of degree 4 can also be reduced to STRONG EDGE $k$-COLOURING of subcubic planar graphs for the cases when $k = 5$ and $k = 6$, using some different techniques. Therefore we have the following results:

**Theorem 3.2** *STRONG EDGE 5-COLOURING is NP-complete for planar bipartite graphs of degree 3, with girth $g = 8$ and for planar graphs of maximum degree 3 and with girth $g = 9$.*

**Theorem 3.3** *STRONG EDGE 6-COLOURING is NP-complete for planar bipartite graphs of maximum degree 3, with girth $g = 4$.*

## References


[1] R.J. Faudree, A. Gyárfas, R.H. Schelp and Zs. Tuza, Induced matchings in bipartite graphs, Discrete Mathematics 78 :83-87, 1989.

[2] R.J. Faudree, A. Gyárfas, R.H. Schelp and Zs. Tuza, The strong chromatic index of graphs, Ars Combinatoria 29B:205-211, 1990.

[3] M.R. Garey, D.S. Johnson and L.J. Stockmeyer, Some simplified NP-Complete graph problems, Theoretical Computer Science 1(3):237-267, 1976.

[4] M. Mahdian, The strong chromatic index of graphs, M.Sc. Thesis, Department of Computer Science, University of Toronto, 2000.

[5] M. Mahdian, On the computational complexity of strong edge colouring, Discrete Applied Mathematics 118, nr. 3:239-248, 2002.

[6] D.B. West, Strong edge-coloring, Open Problems - Graph Theory and Combinatorics, http://www.math.uiuc.edu/~west/openp/strongedge.html .

[7] J.L. Fouquet and J.L. Jolivet, Strong edge-coloring of cubic planar graphs, Progress in Graph Theory (Waterloo, Ont., 1982):247-264, Academic Press, Toronto, Ont., 1984

[8] J.L. Fouquet and J.L. Jolivet, Strong edge-colourings of graphs and applications to multi-k-gons, Ars Combin. A 16:141-150, 1983.