HAL
open science

Performance Analysis of Power Generating Sludge Combustion Plant and Comparison against Other Sludge Treatment Technologies

Mika Horttanainen, Juha Kaikko, Riikka Bergman, Minna Pasila-Lehtinen, Janne Nerg

To cite this version:

Mika Horttanainen, Juha Kaikko, Riikka Bergman, Minna Pasila-Lehtinen, Janne Nerg. Performance Analysis of Power Generating Sludge Combustion Plant and Comparison against Other Sludge Treatment Technologies. Applied Thermal Engineering, 2009, 30 (2-3), pp.110. 10.1016/j.applthermaleng.2009.07.005 . hal-00589477

HAL Id: hal-00589477

https://hal.science/hal-00589477

Submitted on 29 Apr 2011

HAL is a multi-disciplinary open access archive for the deposit and dissemination of scientific research documents, whether they are published or not. The documents may come from teaching and research institutions in France or abroad, or from public or private research centers.

L'archive ouverte pluridisciplinaire **HAL**, est destinée au dépôt et à la diffusion de documents scientifiques de niveau recherche, publiés ou non, émanant des établissements d'enseignement et de recherche français ou étrangers, des laboratoires publics ou privés.

Accepted Manuscript

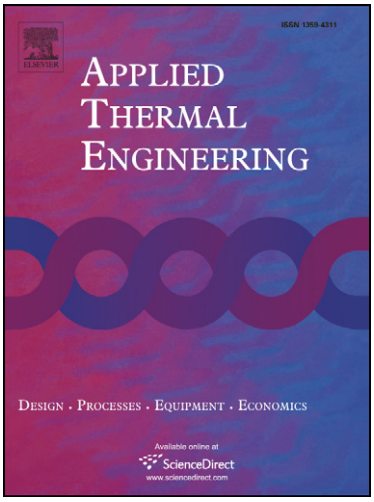

Performance Analysis of Power Generating Sludge Combustion Plant and Comparison against Other Sludge Treatment Technologies

Mika Horttanainen, Juha Kaikko, Riikka Bergman, Minna Pasila-Lehtinen, Janne Nerg

PII: S1359-4311(09)00223-3
DOI: 10.1016/j.applthermaleng.2009.07.005
Reference: ATE 2857

To appear in: *Applied Thermal Engineering*

Received Date: 6 April 2009
Accepted Date: 18 July 2009

Please cite this article as: M. Horttanainen, J. Kaikko, R. Bergman, M. Pasila-Lehtinen, J. Nerg, Performance Analysis of Power Generating Sludge Combustion Plant and Comparison against Other Sludge Treatment Technologies, *Applied Thermal Engineering* (2009), doi: 10.1016/j.applthermaleng.2009.07.005

This is a PDF file of an unedited manuscript that has been accepted for publication. As a service to our customers we are providing this early version of the manuscript. The manuscript will undergo copyediting, typesetting, and review of the resulting proof before it is published in its final form. Please note that during the production process errors may be discovered which could affect the content, and all legal disclaimers that apply to the journal pertain.

ACCEPTED MANUSCRIPT

ATE-2009-264 Revised Manuscript (Revision 2)

Performance Analysis of Power Generating Sludge Combustion Plant and Comparison against Other Sludge Treatment Technologies

Mika Horttanainen, Juha Kaikko*, Riikka Bergman, Minna Pasila-Lehtinen, Janne Nerg

Expectations on wastewater sludge treatment and recovery of its energy and material contents are increasing because of the tightening legislation and the obligation to reduce environmental impacts of sludge disposal. The objective of this study was to analyze the performance of a heat and power generating sludge combustion plant from technical and economical viewpoints and to compare the studied concept to optional sludge treatment technologies. The plant performance was modeled for sewage sludge produced by approximately 200 000 inhabitants. Two plant sizes below 1 000 kWe range were investigated, the smaller plant using sludge as the only fuel and the larger plant with wood chips as the additional fuel. The plants were compared with heat-only plants of similar size. The payback periods for heat-only plants are typically shorter than with the cogenerating plants because the changes in plant investment affect stronger the economy than do the revenues from selling electricity. The gate fee of sludge treatment has the strongest effect on the payback period. The selection of the plant concept (cogeneration, heat only or pure electricity generation) is, however, affected more by the local demand of heat and electricity than pure economy. The selection of the optimal technology for sludge treatment is a complicated task. The studied concept can be the optimal choice, for example, if there is no cement kiln or co-combustion possibility near the source of sludge, if there is no land enhancement demand for the digested sludge, or if the energy surplus from combustion compared to anaerobic digestion is considered more valuable than nutrient recovery possibility from digestion. If the new technology concept is found competitive, it still has to meet the challenge of acceptability from the business, social and cultural points of view.

Keywords: sludge treatment; waste to energy; combined heat and power generation

* Corresponding author. Tel.: +358 5 621 2704; fax: +358 5 621 6399.
E-mail address: juha.kaikko@lut.fi

ACCEPTED MANUSCRIPT

ACCEPTED MANUSCRIPT

Introduction

Development of wastewater treatment in developed countries has increased the amount of wastewater sludge during the past decades. In the European Union (EU), wastewater has to be treated in every population center which has at least 2 000 inhabitants or otherwise produces the corresponding amount of wastewater [1]. Wastewater sludge is one of the largest separate waste material flows of the municipalities. The production is about 180 kg/inhabitant/a measured in the typical dry solids (DS) content of 20 mass% after mechanical drying [2]. Wastewater sludge is a biodegradable material which produces significant methane emissions if landfilled, thus, the sludge should be treated and utilized efficiently whenever possible.

The main objectives of the treatment technologies are the reduction of the volume and mass of the sludge, elimination of the microbial activity and pathogens, prevention of odor release, and recovery of nutrients and/or energy of the material. Biological treatment technologies, like composting and anaerobic digestion, are able to reduce the volume of the sludge by 5-50 %. The advantage of biological treatment is the possibility to recover the nutrients and humus to the ecosystem. The problems are usually related to low demand and varying quality of the product as well as odor release. Composting is also an energy consuming process. It has been the most utilized technology in Finland where more than 80 % of wastewater treatment sludge is composted [2]. According to Fytili and Zabaniotou [3], the most common ways to treat sewage sludge in Europe are agricultural use (37 %), landfilling (40 %), and incineration (11 %). Landfilling of untreated sludge is prohibited in several European countries [4]. Often, there is a lack of demand for composted or digested sludge for agricultural or other land enhancement use [2].

Thermal treatment is usually based on combustion of the organic part of sludge. In this case, the total volume reduction of the mechanically dewatered sludge (dry solids content about 25 mass%) is at least 90 % and the only product, in addition to energy, is ash. Wastewater treatment is not needed in thermal sludge processing. Pathogen elimination is complete in a temperature higher than 850 ºC, which is the demand of the EU waste incineration directive [5], and odor control is also simple because the odorous

ACCEPTED MANUSCRIPT

ACCEPTED MANUSCRIPT

gases can be supplied to the furnace with the combustion air. Energy is recovered from the total organic mass, instead of biodegradable part in anaerobic digestion, but most of the heat is consumed in the evaporation of water. Because of the aforementioned problems in biological treatment and advantages of thermal treatment, the incineration of wastewater sludge is estimated to increase remarkably in the EU. Thermal treatment and energy recovery of sewage sludge has traditionally been executed in cement kilns and mono- and co-combustion furnaces suitable for sludge combustion [6], [3].

In many countries, only few technologies are used for treating sludge. For instance, composting is the main technology in Finland [2], multiple hearth furnace is the most prevailing incineration technology for sludge in the USA, and fluidized bed combustors are common in Japan [6]. The treatment facilities are often delivered by few dominating companies. The supplier of a new technology has to compete with strong existing players and convince the customers which are often rather conservative municipality operators or wastewater treatment companies. The challenge is not only in showing the technical and economical competitiveness of the technology, but also in the social and cultural acceptability of the technology. In order to gain success for a new technology or a product, different user groups must approve the technology and willingly use it. In order to achieve this goal, the dominant cultural elements and the influence of these elements on developing and launching a new technology or product must be understood.

In this article, optional design alternatives of a Waste-to-Combined Heat and Power (WtCHP) concept are studied. The concept was first introduced by Einco [7] and has been studied theoretically by Horttanainen et al. [8]. Different design options are introduced for different cases of energy need. The performance and economy of the options are analyzed and compared with Waste-to-Heat (WtH) plants where the sludge is used to generate heat only. Furthermore, the WtCHP concept is compared to the competing sludge treatment technologies by analyzing the strengths and weaknesses of the main alternatives. Using this kind of analysis, the applications or regions where the WtCHP concept is a competitive choice are determined. In addition to the technical and economical analysis and comparison, the cultural elements of the new sludge treatment technology are discussed.

ACCEPTED MANUSCRIPT

ACCEPTED MANUSCRIPT

Studied plants

In this work, two alternatives are considered for the WtCHP plant: a plant that uses sludge as the only fuel and a plant where additional fuel such as biofuel or recycled fuel are combusted in combination with sludge. When using sludge only, the size of the plant is limited by the transport distances of sludge whereas the addition of other fuels enables the increase of the plant size. The study focuses on distributed, small-scale energy systems and therefore, the size of the plant is increased in the co-firing scheme only to a level that enables the use of alternative turbogenerator technology in the steam cycle. With the selected dry solids content of sludge, the plant generates electricity and heat even with sludge as the only fuel. The heat can be utilized for district heating or industrial purposes such as drying raw material for pellets. District heating option is selected for this study. A pre-requisite for district heating application is that the heat load should be located close enough to the plant so that the connection to the heating network is economically feasible. As an alternative for the WtCHP plant, a WtH plant is considered where the sludge and possible co-firing fuel is burned in a hot water boiler and the heat is used for district heating. In this application, external electricity is required but the plant configuration is simpler than with the WtCHP plant.

The developed WtCHP process uses a commercial dryer for drying the sludge thermally and a reactor for burning the dried sludge and odorous gases from the dryer in a controlled temperature zone [7]. The combustion takes place in accordance with the EU waste incineration directives [5] so that the temperature level of the gases exceeds 850 °C for a minimum of 2 seconds. Both the dryer and the combustion reactor apply circulating fluidized bed technology.

The WtCHP plant is based on a steam cycle with a drum-type boiler and a back-pressure turbine. The configuration of the plant is simple for maintaining the investment costs at a reasonable level, thus, no air preheating is used. The working fluid is preheated, evaporated and superheated in the heat recovery section of the boiler, but evaporation takes place in the combustion reactor, too, for controlling the combustion temperature. The live steam is directed through the turbine to gain electricity from the turbogenerator. The turbine has no bleeds, and therefore the feed water tank is heated using high-pressure saturated water.

ACCEPTED MANUSCRIPT

ACCEPTED MANUSCRIPT

Part of the turbine discharge steam flow is taken to the dryer where the low temperature-level heat is utilized to vaporize the water content of the sludge without mixing the flows. The dryer is necessary to achieve the required combustion conditions with the wet sludge. Possible co-firing fuel is fed directly to the boiler. The remaining part of the turbine discharge steam flow, which is not needed for drying, is directed to the heat exchanger that transfers the heat for district heating. The condensate from the dryer and heat exchanger is returned to the cycle. A schematic diagram of the WtCHP plant is presented in Figure 1.

The heating plant WtH constitutes an alternative for the cogenerating WtCHP plant, turning waste to heat only. In the selected configuration, the heating plant contains a dryer and a combustion reactor similar to the WtCHP plant, but no power cycle. The returning district heating water is heated in the heat recovery section and in the combustion reactor. The resulting hot water is first directed to the dryer and then fed back to the district heating network. The supply temperature of the water is controlled by mixing the heated water with the cold return water. The plant provides heat but requires electricity to operate. Figure 2 presents a schematic diagram of the WtH plant.

In the studied application, both plants process sewage sludge produced by 200 000 inhabitants. The corresponding amount of sludge is 28 800 t/a with an average dry solids content of 25 mass%. For the WtCHP plant, such amount yields a power output of about 400 kW at the generator terminals. In the co-firing scheme, the amount of sludge remains unchanged, but an additional amount 12 050 t/a of wood chips with dry solids content of 60 mass% is burned to increase the WtCHP plant size to about 1 000 kW. The amount of co-firing fuel is so low that sludge must be dried to stabilize combustion. The plants operate at nominal load of 8 000 h annually. The properties of the dry solids of sludge and biofuel are presented in Table 1 [9], [10].

The specifications for the plants have been selected to represent typical values in the studied size range when applicable. One of the most significant components of the WtCHP plant is the turbogenerator, because it affects strongly the electricity yield of the plant. There are several types of turbogenerators available in the market. In conventional construction of a turbogenerator, a mechanical power

ACCEPTED MANUSCRIPT

transmission (reduction gear) is used between the turbine and the generator to set the rotating speed of the generator as desired. In this case, the generator can be of any electrical machine type but synchronous generators are typically used. In sophisticated new high-speed design, the turbine and the generator as well as the main feed pump are mounted in the same shaft, and the high rotational speed is determined by the turbomachine. The losses by the mechanical gearbox are avoided and full speed control is achieved. In high-speed applications, solid rotor induction machines and permanent magnet synchronous machines are used as generators. The selection of the turbogenerator is studied as a separate optimization task [11] in the smaller plant size. The specifications of the smaller unit are based on data obtained from a commercial turbogenerator that is equipped with a reduction gear. In the larger size, the specifications have been evaluated based on a novel high-speed turbogenerator that is currently under development [12], [13]. The high-frequency current from the generator is converted using an inverter, hence, the gearbox is omitted. The auxiliary power demand of all the plants is high relative to the plant size, which is mainly due to the circulating fluidized bed technology in the dryer and boiler. The power demand of the plant alternatives has been determined in co-operation with the manufacturer of the fluidized bed components. Table 2 presents the main design specifications of the plants.

Simulation models have been constructed for the dryer and combustion reactor using a commercial heat balance modeling software (IPSEpro). These components have been used together with standard power plant components to obtain process models for the studied plants. The plant performance from the models serves as a basis for the economic analysis and is presented in Table 3. The term thermal power refers to power that is available for use outside the plant, for district heating for instance.

To determine the sensitivity of the WtCHP plant performance, Figure 3 presents the effect of the sludge dry solids content and main process parameters on the electric and thermal power of the smaller plant. The mass flow of the dry solids is maintained constant while varying the dry solids content.

As the dry solids content is reduced more water must be vaporized in the dryer. This increases the heat demand for drying and consequently, decreases thermal power from the plant strongly. At the same time, electric power experiences only a slight decrease, which is mainly due to the increased auxiliary power need in the dryer. The dry solids content has a minimum value where thermal power becomes zero. The

ACCEPTED MANUSCRIPT

live steam pressure, turbine backpressure and isentropic efficiency affect the plant performance significantly, whereas the live steam temperature has only a minor effect.

Economic analysis

Investment costs have been determined for the studied plants by assuming a one-time acquisition and using a previous work [14] with similar plants as the basis. The costs include the equipment and installation, construction, design and supervision, contingencies, and interest. The equipment and installation dominate the cost formation representing about 70 % of the total investment costs. Compared to the reference data, small deviations have occurred in the component-level performance, which is due to differences in the used sludge and biofuel. The effect on the equipment price has been taken into account assuming the price relative to the equipment capacity, raised to the power 0.7. The resulting investment costs become 5.02 MEUR for the WtCHP 400 plant, 4.07 MEUR for WtH 400, 7.42 MEUR for WtCHP 1000, and 5.73 MEUR for WtH 1000.

The economic analysis is based on determining the payback period for the plant investments when operating at nominal load. In this work, no economic comparison has been made between the plants and other sludge treatment alternatives, such as composting or anaerobic digestion. In addition to the investment, the following annual cost factors have been taken into account in the analysis: return from receiving sludge, cost and return of the electricity and heat, cost of ash treatment and biofuel (if used) as well as cost of operation and maintenance. Possible investment and tax subsidies are beyond the scope of the study and have not been considered here. The economic specifications that have been maintained constant in all calculations are as follows: ash treatment fee 100 EUR/t, energy price for biofuel 11.1 EUR/MWh, ratio of annual operation and maintenance costs to investment costs 6 %, and interest rate 5 %.

Figure 4 presents the impact of sludge reception fee and electricity price on the payback period of the studied plants. The calculations have been performed using two different values for the ratio of heat and electricity prices, 0.2 and 0.5. The former is representative of a case where heat is of very little value

ACCEPTED MANUSCRIPT

compared to electricity while the latter represents for a more typical case. The precondition for using same electricity price for both plant types is that the plants have similar value basis for electricity. This is the case, for instance, when the electric power of the WtCHP plant replaces purchased electricity and the power need of the WtH plant is met with purchasing electricity from the network.

An increase in sludge reception fee decreases strongly the payback period of all alternatives thereby improving the feasibility of the investment. With the selected parameter values, the payback period of the WtH plant is typically lower than with the WtCHP plant of similar size. An exception can be found in a co-firing scheme when low value for heat (heat and electricity price ratio of 0.2) is combined with low sludge reception fee. Here, the WtCHP plant achieves lower payback period with both electricity prices. The energy prices have a minor effect on the economy compared to the sludge reception fee and the effect diminishes as the fee for sludge reception increases. This is a consequence of the small role that the power generation plays in the plant economy. The role is exemplified in Figure 5 presenting the annual cost factors of the smaller sized plants with the sludge reception fee 60 EUR/t (wet sludge), electricity price 80 EUR/MWh, and heat and electricity price ratio of 0.5.

To establish the boundary conditions for the competitiveness of the WtCHP plant against WtH plant, a limiting value has been determined for the heat and electricity price ratio so that the payback periods of the plant alternatives of similar size become equal. This corresponds to a case where the relative net present values of the investments are also equal. In case the actual price ratio remains lower than the limiting value, the WtCHP plant has a lower payback period than the WtH plant, thereby favoring WtCHP. The precondition is that similar energy prices can be applied to both plants. Figure 6 presents the impact of the sludge reception fee and electricity price on the limiting value.

As the revenue from sludge is increased due to the increased sludge reception fee, the significance of the heat and electricity prices are further reduced, which is indicated by the decrease of the limiting value. Increase in the electricity price reduces the dependency but only moderately. For the studied range of the sludge reception fee, the value for heat is allowed to be only 28 % of the electricity price even at its highest to make the WtCHP plant more favorable than WtH in larger plant size. In smaller size, the limiting value remains smaller and becomes negative at higher sludge reception fee levels. It is worth

ACCEPTED MANUSCRIPT

ACCEPTED MANUSCRIPT

noting that the limiting value does not depend on the absolute values for the investment, only on their ratio.

In case there is no demand for the produced heat, the heat-only plant WtH is no longer a relevant option. Instead, the WtCHP plant can be implemented as a condensing power plant, generating only electricity and discharging heat to the environment through a condenser. Furthermore, the WtCHP plant can be designed so that no heat is discharged to the environment [8]. In this case, the dry solids content of the sludge must be reduced before the plant so that all heat is consumed in the dryer. If the plant is located in the wastewater sludge treatment facilities, lower dry solids content can be achieved by mixing the processed and concentrated sludge with the mechanically dried sludge taken from the process.

Discussion

The steam properties that are used in the WtCHP plant represent conventional values in small scale steam power plants. Increasing the live steam pressure, for instance, would increase the electricity yield from the plant. In the selected design, the steam is directed to the dryer after the turbine and hence, the backpressure is determined by the dryer operation. If turbine bleeds were used, the steam for drying purposes could be taken through the bleeds with the rest of the steam expanding to lower pressure levels. In practice, selection of a turbogenerator is limited by the low number of commercially available turbines in the studied size range. One option is to design a new turbine for the WtCHP plant provided that sufficient market potential exists.

The auxiliary power demand of the plant alternatives is high because of the circulating fluidized bed technology that is used in the dryer and combustion reactor. For instance, grate firing would decrease the power demand as well as investment costs to a certain degree. However, due to the granular form of the dried sludge, grate firing is not applicable when using sludge as the only fuel. In the heat-only plant WtH, commercial hot water boiler could be applied to reduce the plant cost.

ACCEPTED MANUSCRIPT

ACCEPTED MANUSCRIPT

The starting point for the concept development has been the simplicity of the WtCHP cycle. If the amount of the co-firing fuel is high enough, the required combustion conditions can be reached even without drying the sludge. Omitting the dryer would simplify the WtCHP plant further and also enable the reduction of the backpressure. On the other hand, the process can be further developed by adopting air pre-heating, flue-gas condensation or turbine bleeds. Novel process configurations including alternative water circulation arrangements in the boiler or steam reheat for instance may bring significant benefits to the plant performance and control. The economic feasibility of the aforementioned process changes can be determined by taking into account their effect in performance as well as in the costs.

The results of the studied cases show that the heat-only plants have typically lower payback periods than the cogenerating plants of similar size, making the heat-only plant as the more profitable investment. However, in practical applications, the selection of the plant type is usually dominated by the demand for heat and electricity. Heat must be consumed locally whereas electricity can be transmitted easily if the transmission network exists. Furthermore, it must be noted that the applied modeling approach cannot take into consideration the market potential that is involved with the small-scale cogeneration of heat and electricity, or the generation of electricity only. These aspects will be considered later in the chapter.

The developed WtCHP concept has competitors which are different either from the thermal treatment and energy recovery or from the total treatment technology viewpoint. Some of the technologies have been mentioned in the introduction. Here, the advantages and restrictions of the WtCHP process are compared to the other choices.

Stasta et al. [15] have studied co-combustion of sludge in cement kilns with conventional fuels. Combustion in the cement kiln is practical because in addition to energy recovery, the ash of the sludge can be utilized as the raw material for cement production. If cement kiln is used for sludge utilization, there are no large separate investment needs to the sludge combustion facilities. Thermal drying has to be arranged for the sludge, which incurs investment costs. Cement kilns are, however, not available for most of the wastewater treatment plants within a short enough distance. The WtCHP concept is designed for local or regional sludge treatment and it can utilize either sludge only or sludge with other solid fuels for energy production.

ACCEPTED MANUSCRIPT

ACCEPTED MANUSCRIPT

It is possible to burn wastewater treatment sludge in a fluidized bed boiler designed for multi-fuel purposes. These kind of plants are used for cogeneration or heat-only production of municipal energy companies and process industry. The main fuels are often different wood residues, peat, coal and solid recovery fuels. Wastewater sludge can be supplied to the furnace as a small fraction (0…10 % of the total fuel mass flow) without difficulty. The precondition for this kind of integrated energy conversion and sludge treatment is that there is an existing suitable multi-fuel boiler, or need for such an amount of energy that the local or regional sludge flow forms only a small part of the fuel supply. Fluidized bed boilers are not so common in countries which traditionally use fossil fuels for energy production in boilers that are designed for a single fuel type. In EU countries, the waste incineration directive sets additional demands to the co-combustion plants (waste burned with other fuels), compared to multi-fuel plants using only biofuels and fossil fuels. The plant has to invest for the control and measuring devices and it has to obtain the waste incineration permission for the plant before receiving wastewater sludge. Such demands entail additional costs and, in many cases, involve complicated processes for the approval of the plant. The owners and users of the existing plants are sometimes reluctant to make these kind of changes. Often, it is simpler to build a new plant for co-combustion of waste and other fuels.

Anaerobic digestion of wastewater sludge is a method to recover nutrients in addition to the energy content of the waste. It is estimated that the existing non-renewable resources of phosphate ore may be used up in 60 years. For this reason, it is essential to recycle efficiently the phosphorous of different waste materials. Nitrogen is also an important nutrient and it is lost in combustion of the dewatered sludge. Nitrogen and phosphorous nutrients are mostly conserved in anaerobic digestion and they can be utilized for fertilizing purposes in the fields. On the other hand, it is possible to utilize the phosphorous of the wastewater sludge ash. According to Franz [16], 90 % of the phosphorous in the ash can be extracted by sulfuric acid leaching. Similarly, heavy metal concentrations can be reduced from the ash by ion exchange or sulfide precipitation. The heavy metals can also be a problem in the recovery of digestate when the proportion of sewage sludge in digestion is high.

Anaerobic digestion converts most of the biodegradable organic solids to biogas. The methane in the biogas can be converted to heat and electricity or can be used as transportation fuel. Biogas is produced

ACCEPTED MANUSCRIPT

only from the biodegradable part of the organic solids, which means that part of the carbon is not converted to energy. On the other hand, the moisture of the sludge is not converted to vapor, which saves a large amount of energy compared to combustion where all the water is vaporized. The energy balance of anaerobic digestion can roughly be compared to the WtCHP process using the following assumptions:

- 60 % of the total solids of sludge is volatile (ash-free part 67.6 %),
- methane yield from the volatile solids is 0.2 m^3/kg (variation with raw and thermally pre-treated sludge 0.13-0.26 m^3/kg according to Bougrier et al. [17]),
- 20 % of the energy content of biogas is needed in the anaerobic digestion process (heating of the sludge, reactor heat losses, pumping, mixing, and possible mechanical dewatering), and
- total efficiency of the biogas conversion to energy is 85 %.

With these assumptions, the total energy yield of the process is about 5 700 MWh/a which is about 22 % lower than the energy yield of the studied smaller WtCHP plant.

In thermal treatment of sludge, it is possible to recover the energy of other than biodegradable solid waste materials. The process can also use biofuels and fossil fuels for energy conversion. Consequently, this kind of process can be integrated into local energy production in a way that the plant can produce, for example, the total heating energy need of a factory, village or town. Anaerobic digestion can also be used for the treatment of source-separated kitchen waste, unlike the WtCHP process, but it can not be designed according to the energy need. The design is based on the local and regional demand of biodegradable waste treatment.

Based on the comparison above, it can be concluded that the WtCHP concept is competitive at least in the following conditions:

Comparison to anaerobic digestion

- There is no rational use for the digested sludge in the region or the transport distance is too long.
- The digested sludge is not suitable for fertilizing or land enhancement purposes because of too high concentrations of the harmful compounds or pathogens.
- The value of the lost nitrogen nutrient is lower than the value of surplus energy achieved with thermal treatment.

ACCEPTED MANUSCRIPT

ACCEPTED MANUSCRIPT

- The value of lost nitrogen and phosphorous is lower than the value of surplus energy taking the cost of ash disposal into account (if the ash can not be recovered).
- The effectivity of odor and pathogen elimination is considered more valuable than the recovery of the nutrients.

Comparison to other combustion technologies

- There is no cement kiln within a rational distance of the wastewater treatment plant.
- The distance to the co-combustion furnaces, using suitable technology for sludge incineration and having the necessary permissions, is too long.
- The possibility for phosphorous recovery is considered to be worth the separate investment.

After the technical, economical and environmental analysis of different treatment technologies, there is still the challenge to achieve the acceptability of the buyers and the surrounding society for the new technology. The business concept for a small scale WtCHP plant relies on the theoretical frame of business concepts by Hamel [18] and Chesbrough [19], [20]. The WtCHP plant is an example of a business falling in between two lines of businesses: waste management and energy generation. Finding a place in between these two lines can be seen as the future trend for innovations [21]. The foundations of the WtE business as well as any other business are the resources and competences. Competitive strategy is in the heart of the company defining the guidelines for the business. The target market defines the customers and customers' needs, and this information will be the basis for the value proposition. The different parts of the value chain are needed to fulfill the offering. It must be noted that value creation is a larger and more complex system than the value chain, and therefore a value net plays an important role in a business field where there are several actors involved.

The offering will be fulfilled through projects, plants and services, which are the outcomes of the different factors in the business. The more complex legislation concerning wastewater sludge treatment is leading municipalities to look for new options. Outsourcing the wastewater and sludge treatment operations can be a considerable possibility in the future. Therefore, the demand for service providers can be expected to grow and the customers' needs can be fulfilled through services rather than plain equipment deliveries. Through the fulfillment of the offering, there will be opportunities for value capture.

ACCEPTED MANUSCRIPT

ACCEPTED MANUSCRIPT

Based on the economic analysis, the main source of income and the most significant factor in determining the payback period of the WtCHP plant is the reception fee or gate fee of sludge. The income structure changes when other fuels than sludge are combusted. The cost of other fuels is introduced but also the heat and electricity generation and the revenue from the end products is increased. The revenue of the WtCHP plant is primarily based on the handling of sludge. This is the basic model where the business is about owning and operating the plant.

The revenue is dependent on the offering and the surrounding business environment. The different trends, characteristics and changes in the society have a strong impact on the profitability. Therefore, the earnings logic varies greatly depending on the place, time and societal system. When evaluating the revenue mechanism, it has to be considered that the profit of the WtCHP plant is affected by the factors of the macro-environment. If there is no law about wastewater treatment or if it is not being supervised in the country of operation, the profit from taking in wastewater sludge will probably be remarkably smaller. However, the amount of sludge is greater in areas with dense population, which may increase the profit even though the unit price might be lower.

The drivers possibly affecting the waste management and energy sector are the increasing population and urbanization, the growth of energy consumption, increasing energy price and the use of renewable energy. The environmental issues as well as environmental laws have impacts on the businesses around energy and waste. These factors vary a lot from one country and geographic area to another. Because of the different macro-level factors, the business opportunities and earnings logic also vary depending on the area and possible future development.

In addition to the macro-level fluctuations, social acceptance of a new technological innovation may have an effect on the business environment. Implementation of a new WtCHP plant that is based on the handling of sludge depends on its general acceptance among the members of a society. Moreover, the implementation of a new technology is related to the cultural setting of a society, which influences not only the development of the technology itself, but also the social acceptance process of the technology [22]. In this study, social acceptance refers to the Wüstenhagen's triangular model of social acceptance

ACCEPTED MANUSCRIPT

of renewable energy innovation [23]. The model rests on three categories of acceptance: socio-political acceptance, market acceptance and community acceptance as specified in Table 4.

The first two categories consist of stakeholder groups that have a bearing on the acceptance process of a new technology. The third category is based on trust and justice at the community level. The actual process of social acceptance from recognizing the need for a new technology to the confirmation stage, when a decision-maker seeks reinforcement for the decision already made, is based on the decision-maker's subjective past experiences and those cultural elements that originate in the prevailing society [24]. Therefore, it is possible to say that the social factors affecting the diffusion of a new WtCHP technology innovation lead and guide the decision making process at the individual as well as community or organizational level.

Since there are several factors affecting the business environment, forecasting is fairly difficult. Nevertheless, it can be said, even though an understatement, that the changes will rather improve than prevent the opportunities for a WtCHP type of distributed cogeneration and sludge treatment business.

Conclusions

In the computational part of this study, the economic feasibility of the Waste-to-Combined Heat and Power (WtCHP) concept has been analyzed for two plant sizes: the smaller one with sludge as the only fuel and the larger one with co-firing of sludge and biofuel. In both cases, the results have been compared with Waste-to-Heat (WtH) plants. In addition, optional design possibilities of the WtCHP concept have been introduced so that the local energy needs can be taken into account.

The payback periods of all studied plant alternatives are at the level that suggests feasibility for the investments, provided that heat is of reasonable value compared to electricity and the sludge reception fee is not too low. Altogether, the sludge reception fee is the most significant factor affecting the plant economy. The price of the co-firing fuel affects strongly the economy of the larger plants and therefore, viable comparison can only be made between plants of similar size. The results indicate that it is typically

ACCEPTED MANUSCRIPT

more profitable to burn sludge and potential co-firing fuel in a heat-only WtH plant than in a cogenerating WtCHP plant. This is due to the high cost of the power cycle. The value of heat should be very low compared to electricity in order that the cogenerating plant could show better profitability than the heat-only plant. This is especially valid for the smaller plant size. However, it must be noted that in practice the plant type cannot be selected using payback period as the only criterion. The selection is more strongly affected by the demand and duration for heat and electricity.

The widened frame of the reference shows that the implementation of the new WtCHP concept, to the markets in general or to the local energy and waste management system, is a very complicated task in which the superior knowledge solely on technology and economy does not necessarily lead in the optimal result. Energy, waste and wastewater management have been traditionally arranged separately though rational integration of these could provide several advantages. In addition to the existing demand for services and infrastructure and the need for renovations, locally and regionally optimal solution is affected by other local industrial activities, amenability of the decision makers, and the attitude of the authorities and local citizens to the new technology. The complicated combined effects of several factors can be cleared up by using, for example, the multicriteria decision support method presented by Luoranen and Horttanainen [25]. The local and regional decision making should utilize wide surveys committed by the independent research institutions before asking for offers from equipment or process suppliers. The suppliers of a new technology, on the other hand, should know widely the multilevel factors affecting the competitiveness and acceptability of the technological solution to be able to offer the technology to the most potential target areas and to develop the most important parts of the technology affecting its competitiveness.

References

[1] Council Directive 91/271/EEC of 21 May 1991 concerning urban waste-water treatment. Available from: <http://europa.eu/legislation_summaries/environment/water_protection_management/l28008_en.htm> accessed 07/07/2009.

ACCEPTED MANUSCRIPT

[2] Finland's environmental administration, Municipal wastewater sludge. Available from: <www.ymparisto.fi/default.asp?node=18181&lan=fi> accessed 07/07/2009 (in Finnish).

[3] D. Fytili, A. Zabaniotou, Utilization of sewage sludge in EU application of old and new methods — A review, Renewable and Sustainable Energy Reviews 12 (2008) 116–140.

[4] Department for Environment, Food and Rural Affairs of the UK Government (Defra). Available from: <http://www.defra.gov.uk/environment/waste/strategy/factsheets/landfillban.htm> accessed 07/07/2009.

[5] Directive 2000/76/EC of the European Parliament and of the Council of 4 December 2000 on the incineration of waste. Available from: <http://europa.eu/legislation_summaries/environment/waste_management/l28072_en.htm> accessed 07/07/2009.

[6] J. Werther, T. Ogada, Sewage sludge combustion, Progress in energy and combustion science 25 (1999) 55-112.

[7] Einco Oy, Indirect Circulating Fluidized Bed Dryer Overview and Constant Temperature Combustion Reactor/Boiler Overview. Available from: <http://www.einco.fi/brochure.htm> accessed 07/07/2009.

[8] M. Horttanainen, J. Kaikko, R. Bergman, K. Kakko, H.-M. Manninen, E. Marttila, Advanced process for thermal treatment of wastewater sludge, in: Proc. 6th Intl Conference on Technologies for Waste and Wastewater Treatment, Energy from Waste, Remediation of Contaminated Sites and Emissions Related to Climate (Kalmar Eco-Tech 2007), Kalmar, Sweden, 2007, 21-30.

[9] K. Kakko, The treatment of municipal sewage sludge before thermal drying and incineration (Master's Thesis), Lappeenranta University of Technology, Lappeenranta, Finland, 2007, 125 p (in Finnish).

ACCEPTED MANUSCRIPT

ACCEPTED MANUSCRIPT

[10] L. Houdková, J. Boráň, V. Ucekaj, T. Elsäßer, P. Stehlík, Thermal processing of sewage sludge – II, Applied Thermal Engineering 28 (2008) 2083-2088.

[11] J. Nerg, J. Pyrhönen, J. Kaikko, M. Horttanainen, Turbogenerator Selection in a Thermal Sludge Treatment Plant, to be submitted to: IEEE Transactions on Energy Conversion.

[12] J. Nerg, J. Pyrhönen, Thermal Design of a Hermetically Sealed Turbo-Generator Operating in a Small-Power CHP Plant, in: Proc. 7th WSEAS/IASME Intl Conference on Power Systems, High Voltages and Electric Machines (Power ´07), Venice, Italy, 2007, 92-96, ISBN 978-960-6766-13-8.

[13] V. Sihvo, J. Nerg, J. Pyrhönen, Insulation System and Thermal Design of a Hermetically Sealed Turbo-Generator Operating in a Small-Power CHP Plant, in: Proc. Intl Conference on Clean Electrical Power (ICCEP '07), Capri, Italy, 2007, 45 – 50, ISBN 1-4244-0632-3.

[14] J. Anttila, R. Bergman, M. Horttanainen, J. Kaikko, K. Kakko, A. Lana, T. Lindh, M. Luoranen, J. Malinen, H.-M. Manninen, E. Marttila, J. Nerg, M. Pasila-Lehtinen, J. Pyrhönen, Modular CHP plant for utilization of by-product flows of municipalities in distributed energy production, Lappeenranta University of Technology, Lappeenranta, Finland, 2008, 117 p, ISBN 978-952-214-694-6 (in Finnish).

[15] P. Stasta, J. Boran, L. Bebar, P. Stehlik, J. Oral, Thermal processing of sewage sludge, Applied Thermal Engineering 26 (2006) 1420–1426.

[16] M. Franz, Phosphate fertilizer from sewage sludge ash (SSA), Waste Management 28 (10) (2008) 1809-1818.

[17] C. Bougrier, J.-P. Delgenès, H. Carrère, Combination of thermal treatments and anaerobic digestion to reduce sewage sludge quantity and improve biogas yield, Process Safety and Environmental Protection 84 (B4) (2006) 280-284.

ACCEPTED MANUSCRIPT

ACCEPTED MANUSCRIPT

[18] G. Hamel, Leading the Revolution, WS Bookwell, Porvoo, Finland, 2001, 327 p, ISBN 951-0-25646-3 (in Finnish).

[19] H. Chesbrough, Open Innovation, The New Imperative For Creating and Profiting From Technology, Harvard Business School Publishing Corporation, Massachusetts, USA, 2005.

[20] H. Chesbrough, Business model innovation: it's not just about technology anymore, Strategy and leadership 35 (6) (2007) 12 -17.

[21] F. Johansson, The Medici Effect – Breakthrough Insights at the Intersection of Ideas, Concepts, and Cultures, Talentum, Helsinki, Finland, 2005, 266 p, ISBN 952-14-0990-8 (in Finnish).

[22] A. A. Erumban, S. B. de Jong, Cross-country differences in ICT adoption: A Consequence of Culture?, Journal of World Business 41 (2006) 302-314.

[23] R. Wüstenhagen, M. Wolsink, M. J. Bürer, Social acceptance of renewable energy innovation: An introduction to the concept, Energy Policy 35 (16) (2007) 2683-2691.

[24] G. Hofstede, Culture's Consequences: Comparing Values, Behaviors, Institutions and Organizations Across Nations, 2nd ed., Sage Publications, California, USA, 2003.

[25] M. Luoranen, M. Horttanainen, The MEFLO method's application for the feasibility assessment of energy recovery from municipal solid waste in a small integrated municipal service system, Progress in Industrial Ecology – An International Journal 5 (1/2) (2008).

ACCEPTED MANUSCRIPT

ACCEPTED MANUSCRIPT

Figures

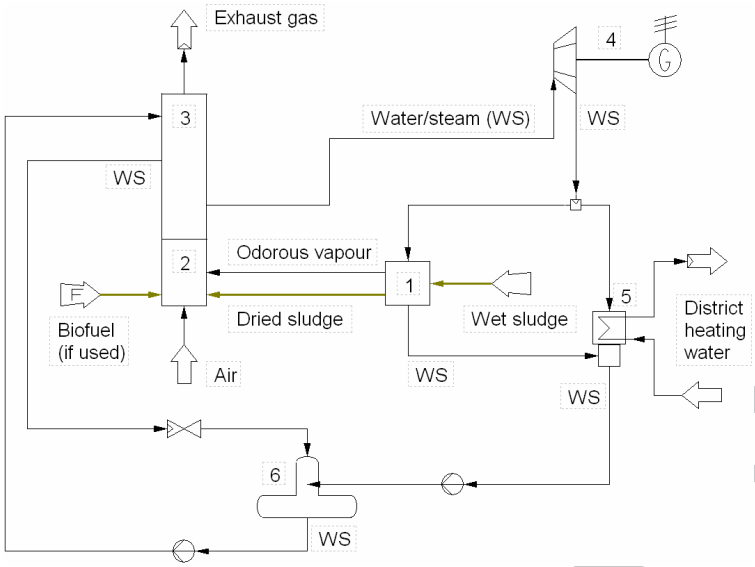

Figure 1. WtCHP plant (1 dryer, 2 combustion reactor, 3 heat recovery section, 4 turbogenerator, 5 district heating heat exchanger, and 6 feed water tank).

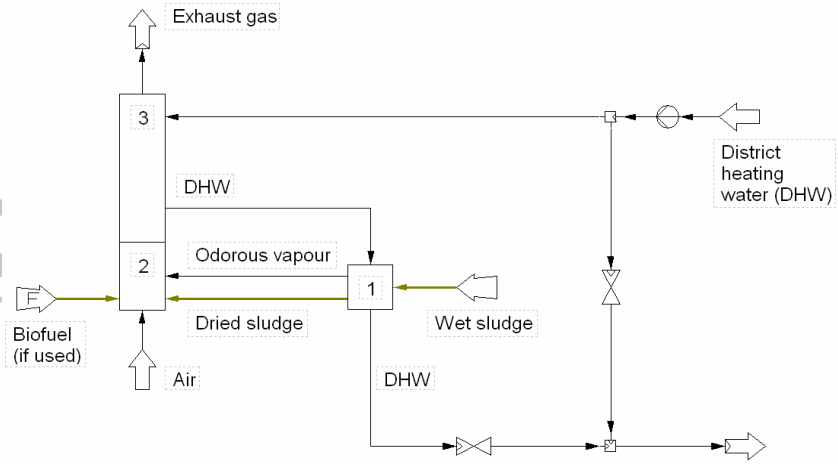

Figure 2. WtH plant (1 dryer, 2 combustion reactor, and 3 heat recovery section).

ACCEPTED MANUSCRIPT

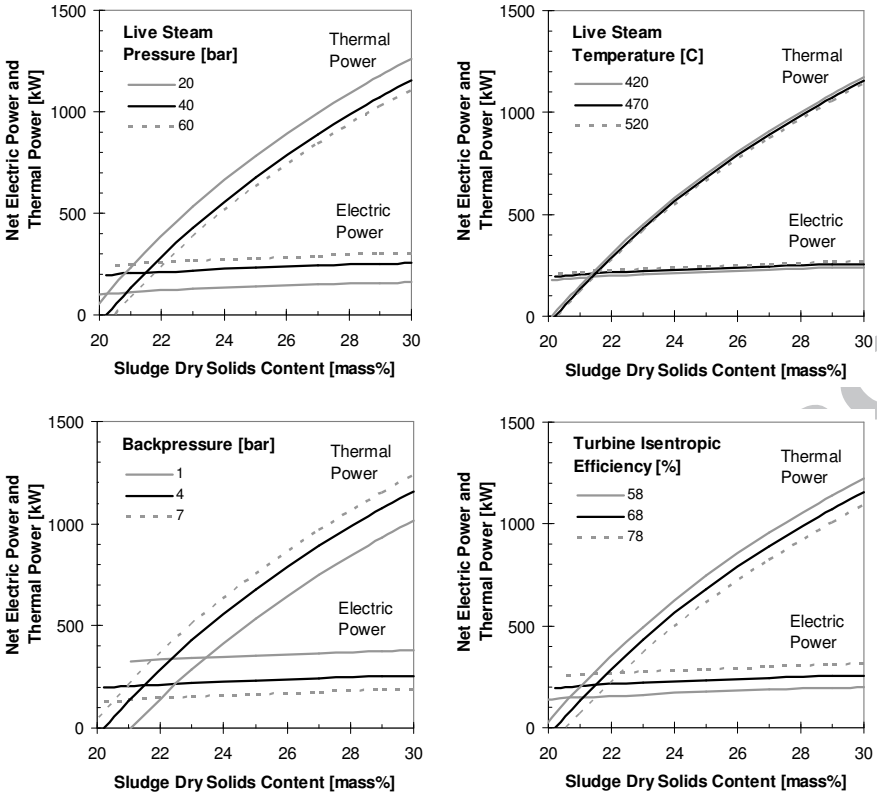

Figure 3. Sensitivity of the WtCHP 400 plant performance against sludge dry solids content and main process parameters.

ACCEPTED MANUSCRIPT

ACCEPTED MANUSCRIPT

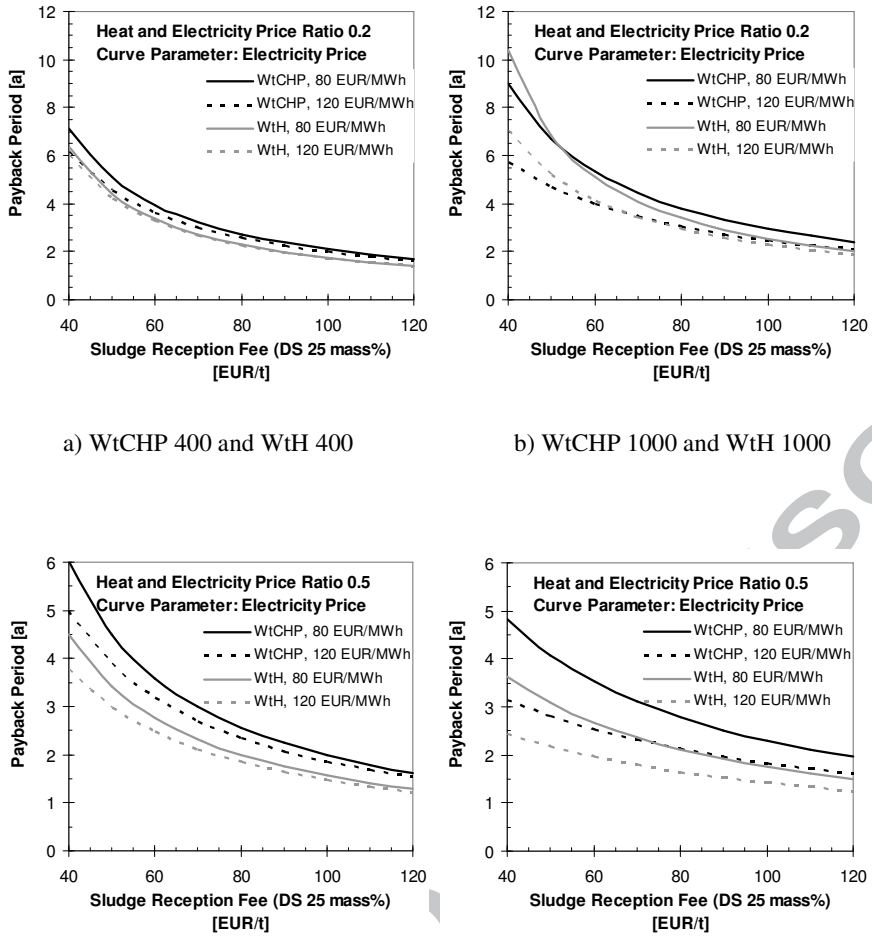

a) WtCHP 400 and WtH 400

b) WtCHP 1000 and WtH 1000

c) WtCHP 400 and WtH 400

d) WtCHP 1000 and WtH 1000

Figure 4. Effect of the economic parameters on the payback period of the studied plants.

ACCEPTED MANUSCRIPT

ACCEPTED MANUSCRIPT

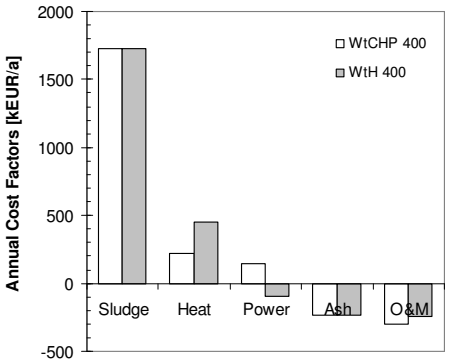

Figure 5. Example case of the annual cost factors for the WtCHP 400 and WtH 400 plants.

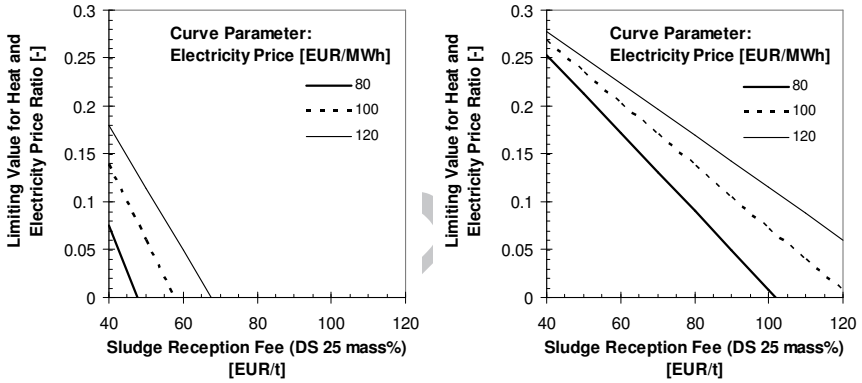

a) WtCHP 400 vs. WtH 400

b) WtCHP 1000 vs. WtH 1000

Figure 6. Effect of the economic parameters on the limiting value for heat and electricity price ratio.

ACCEPTED MANUSCRIPT

ACCEPTED MANUSCRIPT

Tables

Table 1. Elementary compositions and heating values for the dry solids of sludge and biofuel (wood chips).

		Sludge	**Biofuel**
C	[mass%]	40.7	50.6
H	[mass%]	4.4	6.2
N	[mass%]	5.6	0.5
O	[mass%]	16.8	42.3
S	[mass%]	-	-
Ash	[mass%]	32.4	0.4
Lower heating value of the dry solids	[MJ/kg]	15.3	19.1

ACCEPTED MANUSCRIPT

ACCEPTED MANUSCRIPT

Table 2. Design specifications of the studied plants.

		WtCHP 400	WtCHP 1000	WtH 400	WtH 1000
Sludge dry solids mass flow	[kg/s]	0.250			
DS content of dried sludge	[mass%]	90			
Biofuel dry solids mass flow	[kg/s]	-	0.251	-	0.251
Air ratio in combustion	[-]	1.4			
Flue gas temperature after combustion reactor	[°C]	850			
Stack temperature	[°C]	230		150	
Water/steam pressure at boiler outlet	[bar]	40		10	
Water/steam temperature at boiler outlet	[°C]	470		175	
Turbine backpressure	[bar]	4		-	
Turbine isentropic efficiency	[%]	68	77	-	
Mechanical efficiency	[%]	93	93	-	
Gearbox efficiency	[%]	97	-	-	
Generator efficiency (incl. inverter if used)	[%]	95	96	-	
Auxiliary power demand	[kW]	150	251	149	248

ACCEPTED MANUSCRIPT

ACCEPTED MANUSCRIPT

Table 3. Plant performance.

		WtCHP 400	WtCHP 1000	WtH 400	WtH 1000
Net electric power	[kW]	232	749	-	-
Electric power demand	[kW]	-	-	149	248
Thermal power	[kW]	679	3 771	1 418	5 429
Electricity yield	[MWh/a]	1 853	5 992	-	-
Electricity demand	[MWh/a]	-	-	1 192	1 984
Heat	[MWh/a]	5 434	30 170	11 342	43 429

Table 4. Three categories of social acceptance according to Wüstenhagen et al. [23].

Socio-political acceptance of technologies and policies	**Market acceptance**	**Community acceptance**
by the public	by consumers	procedural justice
by key stakeholders	by investors	distributional justice
by policy makers	by intra-firm actors	trust

ACCEPTED MANUSCRIPT