HAL
open science

A New Robust and Discriminating Method for Face Recognition Based on Correlation Technique and Independent Component Analysis Model

Ayman Alfalou, C. Brosseau

To cite this version:

Ayman Alfalou, C. Brosseau. A New Robust and Discriminating Method for Face Recognition Based on Correlation Technique and Independent Component Analysis Model. Optics Letters, 2011, 36, pp.645-647. hal-00578315

HAL Id: hal-00578315

https://hal.science/hal-00578315v1

Submitted on 19 Mar 2011

HAL is a multi-disciplinary open access archive for the deposit and dissemination of scientific research documents, whether they are published or not. The documents may come from teaching and research institutions in France or abroad, or from public or private research centers.

L'archive ouverte pluridisciplinaire **HAL**, est destinée au dépôt et à la diffusion de documents scientifiques de niveau recherche, publiés ou non, émanant des établissements d'enseignement et de recherche français ou étrangers, des laboratoires publics ou privés.

A New Robust and Discriminating Method for Face Recognition Based on Correlation Technique and Independent Component Analysis Model

A. Alfalou[1] and C. Brosseau[2]

[1] ISEN Brest, Département Optoélectronique, L@bISEN,
20 rue Cuirassé Bretagne, CS 42807, 29228 Brest Cedex 2, France.
E-mail: ayman.al-falou@isen.fr

[2] Université Européenne de Bretagne, Université de Brest, Lab-STICC,
CS 93837, 6 avenue Le Gorgeu, 29238 Brest Cedex 3, France.
E-mail: brosseau@uiv-brest.fr

November 19, 2010

OCIS codes: 100.5010, 100.3008

Abstract

We demonstrate a novel technique for face recognition combined the independent component analysis (ICA) model with the optical correlation technique. Our approach relies on the performances of a strongly discriminating optical correlation method along with the robustness of the ICA model. Simulations were performed to illustrate how this algorithm can identify a face with images from the Pointing Head Pose Image Database (PHPID). While maintaining algorithmic simplicity, this approach based on ICA representation significantly increases the true recognition rate compared to that obtained with an all numerical ICA identity recognition method, that we recently developed, and with another based on optical correlation and a standard composite filter.

The field of face recognition has made significant progress in recent years. Computational models of face recognition are important because they can contribute to theoretical insights, e.g. image codes, as well as practical applications, i.e. biometrics, security systems, and human-computer interaction. Many different implementations are being actively explored, including eigenfaces [1], Gabor wavelets [2], and principal component analysis (PCA) [3]. Noteworthy, the independent component analysis (ICA) model has sparked interest in searching for a linear transformation to express a set of random variables as linear combinations of statistically independent source variables [4]. ICA provides a more powerful data representation than PCA as its goal is that of providing an independent rather than uncorrelated image decomposition and representation. Interest in ICA mixture models is motivated in part by their exceptional properties, including high sensitivity to high-order relationships among pixels and enhanced face recognition performance when it is carried out in a compressed and whitened space [5].

Motivated by these developments, we investigate an optical recognition technique using ICA as a preprocessing stage for face recognition. In this Letter, our two primary goals are to validate the principle of the new algorithm proposed to recognize a target face using reference facial images contained in the (supervised) learning base, and to focus on its implementation using a standard correlator which can be optically or numerically implemented. In this paper, we used a simple POF filter to validate the principle of our approach. However, other correlation filters, more efficient, and a large set of subjects will be used i.e. that is the goal of an article in progress [6]. One main drawback of the existing face recognition methods arises from the sensitivity to rotation of the target image with the reference facial images. Several studies have shown how composite filters might be designed and optimized for optical correlators [7]. However, it was recognized that the performance of these methods deteriorates for large values of the number of reference facial to be incorporated in the composite filter [8].

In this context, it should be noted that the pioneering studies which developed the theoretical basis of the above mentioned methods have highlighted their good performances for object recognition and identification purposes. However, several limitations related to the use of optical modulators, and to their sensitivity to rotation, illumination conditions, and scaling of the target object relative to the references images were emphasized. Recent works [9-10] have suggested some improvements to overcome these limitations. Moreover Alsamman et al [11] have also demonstrated that the recognition performances of the PCA method are weaker than those obtained with a standard correlation technique. Since the ICA method is robust against the change of image versus rotation, lighting, background, and scale for a database of independent components [12-13], the purpose of this Letter is to use a simple correlation approach. Our approach relies on the performances of a strongly discriminating optical correlation method along with the robustness of the ICA model.

Our algorithm is based on four steps: (1) information mining characterizing a face, (2) fabrication of a learning base modeling the target face, (3) comparison of the characteristics of the target face with the learning base, and (4) assessment of the performance of this approach by evaluating the true recognition and the false recognition rates. To illustrate the idea of this Letter in a face recognition context and to assess the sensitivity of our algorithm in terms of the dimensionality of the reduced space which is constructed by the statistically independent components of face images we used the PHPID and we calculate and compare their adapted Receiver Operating Characteristic (ROC) plots. We first describe technical details of the ICA algorithm which provides an optimal signal representation technique in the mean square error sense [4]. The ICA of a vector S (or a vector representing an image) searches for a linear transformation which minimizes the statistical dependence between its components [4].

$$S = a_1C_1 + a_2C_2 + \cdots + a_nC_n = \sum_{i=1}^{n} a_iC_i \,. \qquad (1)$$

Wher C_i are the independent components, n its number. In [12], we used this merging property to suggest and validate an optical encryption method. As a simpler analogue of Eq. (1), a given face can be considered as a linear combination of several independent components arising from reference facial images contained in a learning base [13]. Here we consider a set of faces of the same subject (to be identified) differing from the head orientations, i.e. V_i with $1 \le i \le n$, which forms the learning base. Our starting point is to apply the FastICA method (see Ref. [12-13] for details) for the reference facial images V_i such as described by the diagram shown in Fig. 1 (a) after transforming each face into a vector V and applying a specific nonlinear function operation to ensure a good convergence of the FastICA algorithm [12]. We have chosen the independent components that give the best result corresponding to the subject X base used in this study. In the next step, each subject V_i of the learning base is correlated with different phase only filters (POF) F_i=POF_i [14], i.e. each correlation filter is calculated from one independent component C_j Fig. 1(b). Each correlation yields a reference peak-to-correlation energy (PCE) value [15] PCE_{ij}

$$PCE_{ij} = f\left(V_i \otimes pof_j\right), \qquad (2)$$

where $\otimes$ denotes the correlation product, *f(...)* defined as the energy of the correlation peak divided by the energy of the correlation plane, pof_j is the inverse Fourier transform of F_j and $C_i \otimes C_j = \delta_{ij}$, δ_{ij} being the Kronecker symbol.

Once the components C_j and the PCE_{ij} values have been determined we follow the algorithm shown in Fig. 1(c). Basically, it consists in writing the vector $V_?$ representing the target face as a linear mixture in terms of the n independent components (IC base) $V_? = b_1C_1 + \cdots + b_nC_n$. Now, by correlating $V_?$ with the different filters POF_j one can obtain the $Val_Corr = \left(PCE_1^{'}, PCE_2^{'}, \cdots, PCE_n^{'}\right)$ vector that used to identify the target face among the reference facial images. We have

$$\begin{aligned} PCE_j^{'} &= f\left(V_? \otimes pof_j\right) = f\left(\left(b_1C_1 + \cdots + b_nC_n\right) \otimes C_j\right) \\ &= f\left(b_1\left(C_1 \otimes C_j\right) + b_2\left(C_2 \otimes C_j\right) + \cdots + b_n\left(C_n \otimes C_j\right)\right), \qquad (3) \\ &= b_j + N_{noise} \end{aligned}$$

where N_{noise} represents the noise in the correlation plane. We now define an error ε vector as

$$\begin{aligned} \varepsilon_1 &= \left|PCE_1^{'} - PCE_{11}\right| + \left|PCE_2^{'} - PCE_{12}\right| + \cdots + \left|PCE_n^{'} - PCE_{1n}\right| \\ \varepsilon_2 &= \left|PCE_1^{'} - PCE_{21}\right| + \left|PCE_2^{'} - PCE_{22}\right| + \cdots + \left|PCE_n^{'} - PCE_{2n}\right| . \qquad (4) \\ &\vdots \\ \varepsilon_n &= \left|PCE_1^{'} - PCE_{n1}\right| + \left|PCE_2^{'} - PCE_{n2}\right| + \cdots + \left|PCE_n^{'} - PCE_{nn}\right| \end{aligned}$$

Each ε_i corresponds to the difference between the Val_*Corr* vector and the ith row elements of the *PCE* matrix. At this point, it is important to recall that the PCE_{in} elements appearing in Eq. (4) correspond to the face V_i of the learning base, as shown in Fig. 1 (b). We then have to find the mean value of the ε_is, $\varepsilon = \left(\varepsilon_1 + \cdots \varepsilon_n\right)/n$, which additionally should be less than a given acceptance threshold *Th* (in order to avoid a false alarm). Thus, the target face $V_?$ is identified as the face of the subject *X*. The Choice of value of *Th* will be discussed in the following paragraph (Fig. 3(c)). What is noticeable in the above algorithm is that finding the coefficient $PCE_j^{'}$ can be realized by introducing the target face in a standard VLC correlator using a POF

realized from a single independent component (Fig. 2). Without loss of generality a simple POF was used to validate the principle of our method; however optimized correlation filters, see e.g. [8-10], can be employed to increase the robustness in the determination of the values of the $PCE_j^{'}$ coefficients. Mathematically, finding the $PCE_i^{'}$ coefficient requires two things. On the one hand, we realize a nonlinear operation within the correlation plane $\left(C_{plane}\right)^k$, where k defines the degree of the nonlinearity (k >1). On the other hand, the PCE of the correlation plane should be determined. For the purpose of minimizing the errors in Eq. (2), a normalization of the PCE_{ij} coefficients was realized in practice by considering the different responses obtained from the correlation of the reference facial images with the independent components.

Having discussed the principle of our method, we now consider a set of results obtained from images of the PHPID [16]. One of the basic questions is how to choose the value of n i.e. the number and the choice of C_j depends on the number and the choice of the considered reference images. In this letter, we chosen only three references X(9) (Right-rotation) , X(27) (without-rotation) and X(45) (left-rotation). In a progress article, [6], we are studying the effect of the choice and the number of C_i on the performance of our approach. However, to validate the principle of our approach, we have chosen a set of three independent components, i.e. only three faces (those which are represented by red frames in Fig. 3 (b)) were considered in the reference facial images. The horizontal axis of Fig. 3 (a) represents the face number presented at the input of our system. The vertical axis corresponds to the values of ε obtained with different positions of the subject $X(i)$ with $1 \le i \le 53$ and $Y(32)$, i.e. the subject Y without rotation which is framed in green in Fig.3 (d). The two curves of Fig. 3 (a) show the good performance of our algorithm. Whatever the facial position $X(i)$ of subject X which can be considered the error obtained by correlating the face $Y(32)$ of subject Y with the independent components base ($C_{i=1,\ldots,3}$) is always larger than the error obtained by correlating subject X with ($C_{i=1,..,3}$). However, to take a reliable decision on the subject identification, an acceptance threshold Th should be chosen such that subject X should be recognized for every facial position $X(i)$ and leads to the rejection of the subject Y whatever his or her facial position. The choice of the value for Th is important since it contributes to false alarm and no detection events. To assess the robustness of our method, adapted ROCs [17] were graphed (Fig. 3 (c)) for a given value of the threshold Th. Every point of the ROC plot is calculated with a specific value of Th within the range $[2000, \ldots, 2200]$. The horizontal axis of the Figure 3-(c) represents the false recognition rate (when subject Y is identified as subject X) and the vertical axis corresponds to the true recognition rate (when subject X is correctly identified). The red curve presents the reference values when the true recognition is equal to the false recognition. We observe that the recognition rate is $\approx 83\,\%$ with a false recognition rate $\approx 3.7\,\%$ (fixing Th arbitrarily to ≈ 2008).

In summary, we have discussed an optical correlation technique using the ICA model to propose solutions to many of the problems associated with face recognition. The fact that this architecture is optically implementable makes this technique well suited for designing improved image processing systems. The face recognition performance obtained with our fast and simple algorithm is larger than that obtained from a composite filter with a significantly smaller false alarm rate. In order to test the robustness of our results, we need to consider effects of adding noises to the input images, effects of increasing the number of independent component, and compare these results with those obtained from using optimized correlation filters [6]. We believe our results can be directly tested experimentally.

Acknowledgments

Work in L@bISEN was supported by Groupe-ISEN. Work in Lab-STICC was supported in part by the CNRS. Lab-STICC is Unité Mixte de Recherche CNRS 3192.

References

[1] M. Turk and A. Pentland, “Eigenfaces for recognition”, J. Cogn. Neurosci. **3**, 71-86 (1991).

[2] L. Shen and L. Bai, “A Review on Gabor wavelets for face recognition,” Pattern Anal. Applic. **9**, 273-292 (2006).

[3] I. T. Jolliffe, *Principal Component Analysis* (Springer, New York, 1986).

[4] P. Comon, “Independent component analysis: a new concept?”, Signal Process. **3**, 287-314 (1994).

[5] M. S. Bartlett, “Face recognition by independent component analysis”, IEEE Trans. Neural Networks **13**, 1450-1464 (2002).

[6] A. Alfalou and C. Brosseau, (unpublished).

[7] B. V. K. V. Kumar, “Tutorial survey of composite filter designs for optical correlators,” Appl. Opt., **31**, 4773-4801 (1992).

[8] A. Alfalou, G. Keryer, and J. L. de Bougrenet de la Tocnaye, "Optical implementation of segmented composite filtering," Appl. Opt. **38**, 6129-6135 (1999).

[9] V. H. Diaz-Ramirez, ”Constrained composite filter for intraclass distortion invariant object recognition”, Opt. Lasers Eng., **48**, 1153-1160 (2010).

[10] A. Ahad S. Awwal, "What can we learn from the shape of a correlation peak for position estimation?", Appl. Opt. **49**, B40-B50 (2010)

[11] A. Alsamman and M.S. Alam, “Comparative study of face recognition techniques that use joint transform correlation and principle component analysis,” Appl. Opt. **44**, 688-692 (2005).

[12] A. Alfalou and A. Mansour "All optical video-image encryption enforced security level using ICA", J.Opt. A: Pure and Appl. Opt., **9**, 787-796 (2007).

[13] A. Alfalou M. Farhat, and A. Mansour, “Independent component analysis based approach to biometric recognition”, in Proceedings of the 3rd IEEE International Conference on the Information and Communication Technology: From Theory to Applications, ICTA-2008, doi: 10.1109/ICTTA.2008.4530111, 1-4.

[14] J. L. Horner and P. D. Gianino, “Phase-only matched filtering,” Appl. Opt., **23**, 812-816. (1984).

[15] J. L. Horner, “Metrics for assessing pattern-recognition performance,” Appl.Opt., **31,** 165-166. (1992).

[16] N. Gourier, D. Hall, and J. L. Crowley, “Estimating Face Orientation from Robust Detection of Salient Facial Features,” *Proc. of Pointing 2004, ICPR, International Workshop on Visual Observation of Deictic Gestures.*

[17] J. P. Egan, *Signal Detection Theory and ROC Analysis* (Academic Press Series in Cognition and Perception, New York, 1975).

Figure captions

FIG. 1: (Color online) Schematics of the algorithm: (a) definition of the independent component learning base, (b), definition of the PCEs matrix , and (c) recognition procedure.

FIG. 2: (Color online) A sketch of the optical setup implementing the face recognition method using ICA.

FIG 3: (Color online) Simulation results: (a) the curve in blue color represents the identification results obtained with different facial positions of subject *X*, the curve in green color corresponds to face *Y*(32) of subject *Y*. For both curves, three independent components were used. (b) Test base representing several positions of face *X* (the three faces of *X* used to compute the independent components are framed in red). (c) ROC plots using 3 independent components.

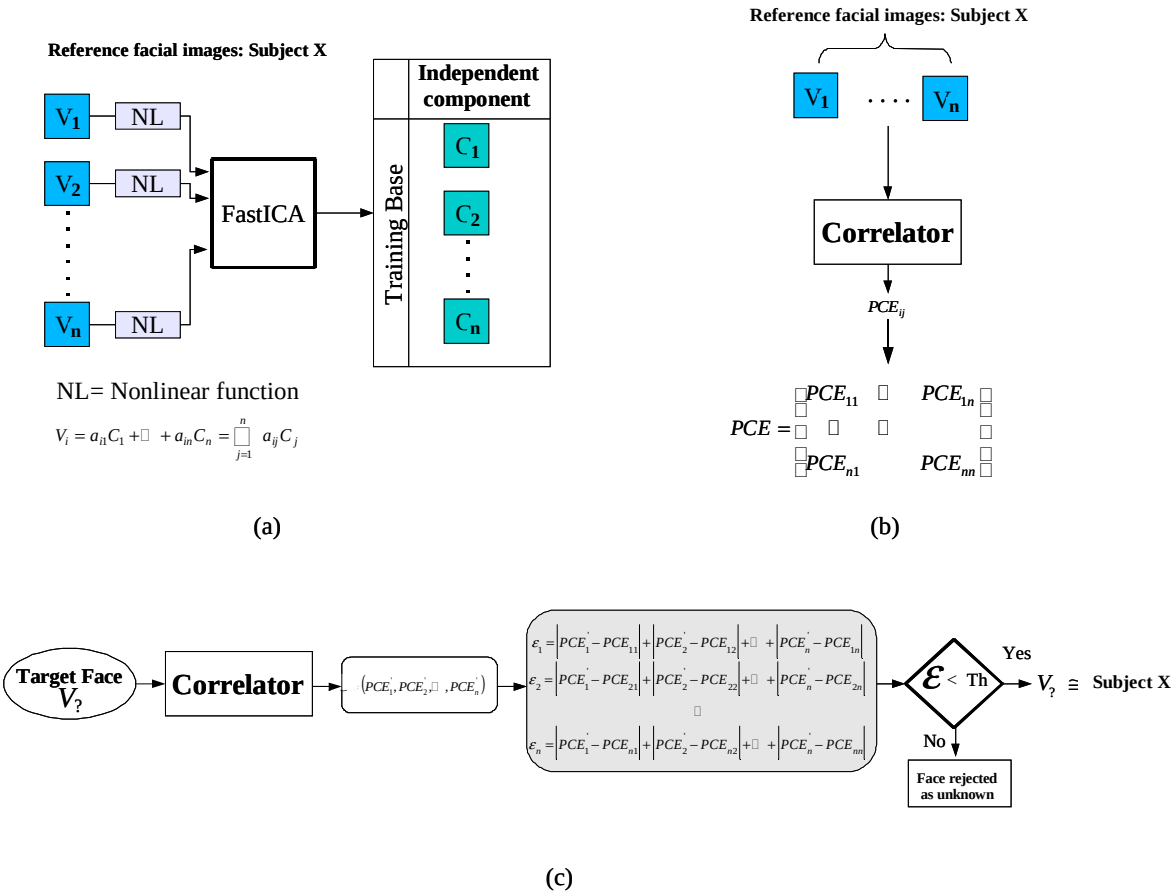

FIG. 1: Alfalou and Brosseau

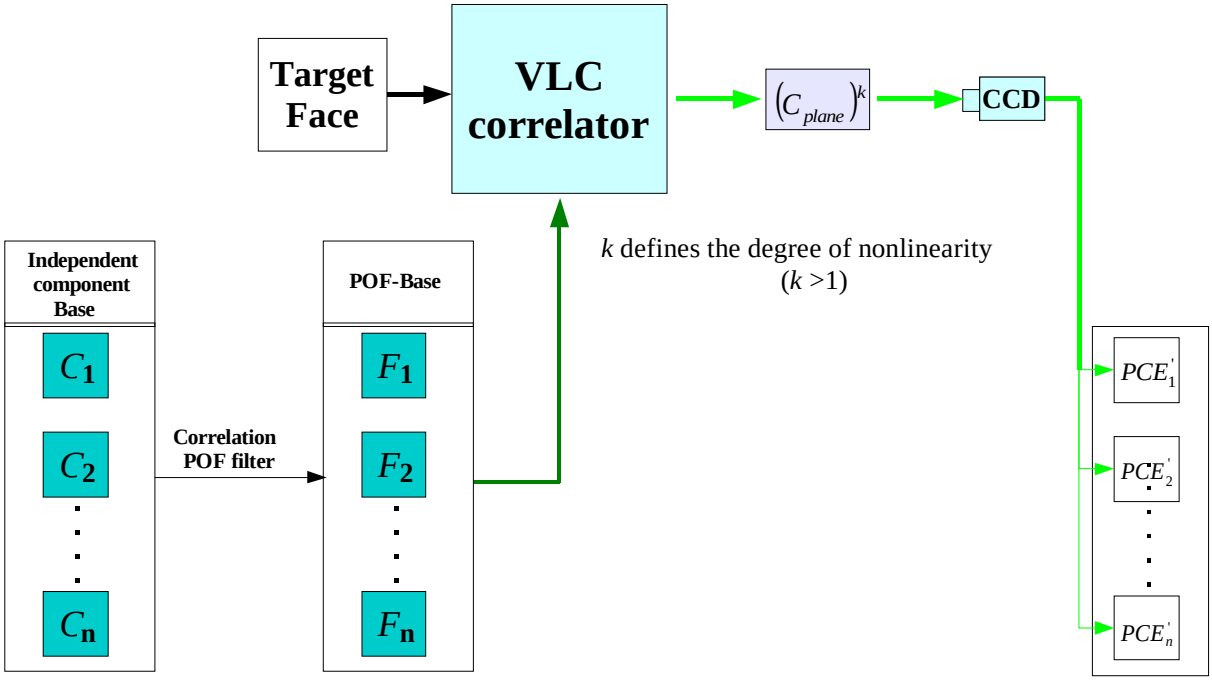

FIG. 2: Alfalou and Brosseau

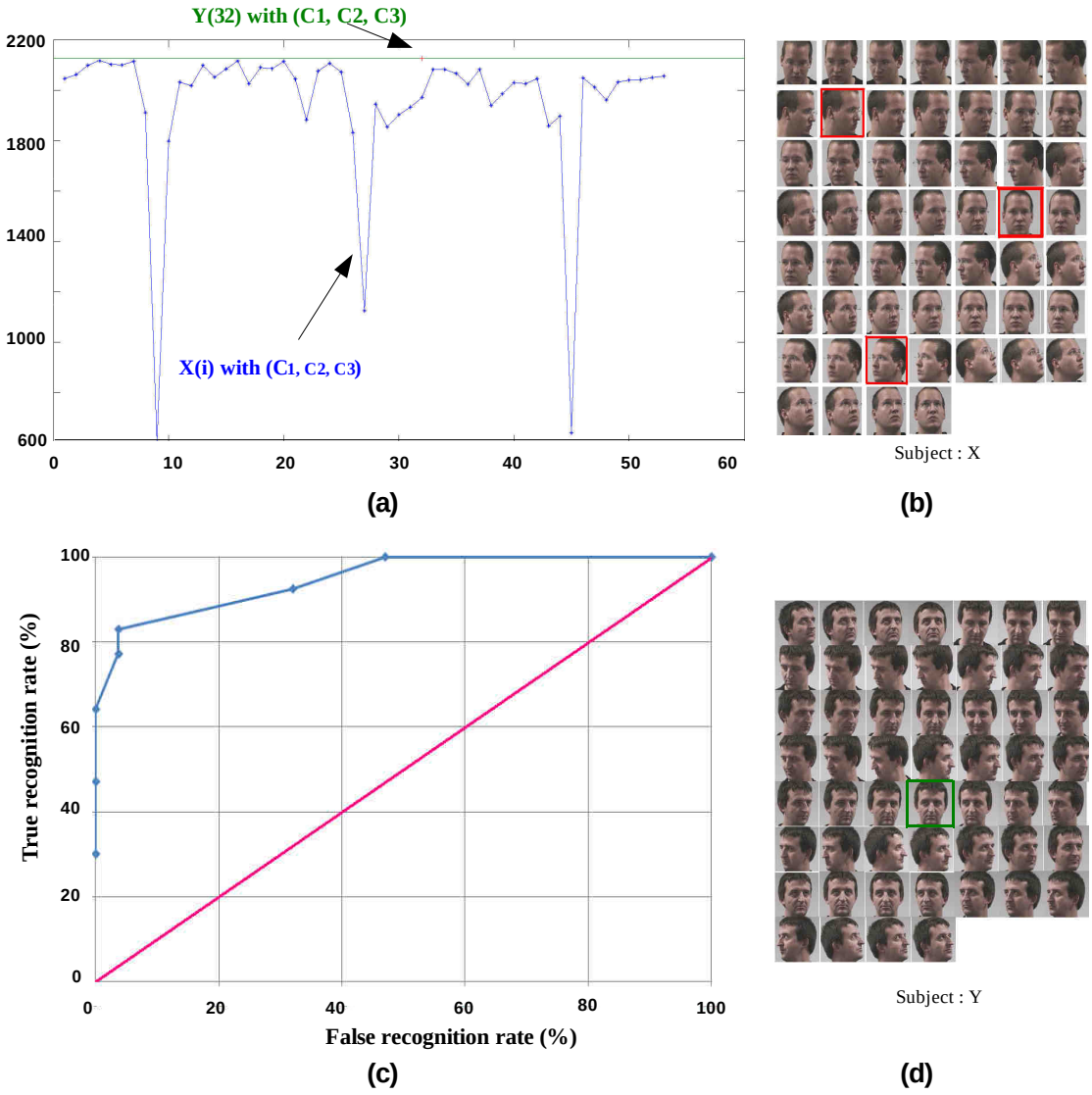

FIG 3: Alfalou and Brosseau