HAL
open science

Patulin distribution in the tissue of Penicillium expansum-contaminated Fuji and Golden apples

Sonia Marín, Hector Morales, Hassan Ahmed Hassan Hasan, Antonio J. Ramos, Vicent Sanchis

To cite this version:

Sonia Marín, Hector Morales, Hassan Ahmed Hassan Hasan, Antonio J. Ramos, Vicent Sanchis. Patulin distribution in the tissue of Penicillium expansum-contaminated Fuji and Golden apples. Food Additives and Contaminants, 2006, 23 (12), pp.1316-1322. 10.1080/02652030600887610 . hal-00577482

HAL Id: hal-00577482

https://hal.science/hal-00577482v1

Submitted on 17 Mar 2011

HAL is a multi-disciplinary open access archive for the deposit and dissemination of scientific research documents, whether they are published or not. The documents may come from teaching and research institutions in France or abroad, or from public or private research centers.

L'archive ouverte pluridisciplinaire **HAL**, est destinée au dépôt et à la diffusion de documents scientifiques de niveau recherche, publiés ou non, émanant des établissements d'enseignement et de recherche français ou étrangers, des laboratoires publics ou privés.

Patulin distribution in the tissue of *Penicillium expansum*-contaminated Fuji and Golden apples

Journal:	*Food Additives and Contaminants*
Manuscript ID:	TFAC-2006-089.R1
Manuscript Type:	Original Research Paper
Date Submitted by the Author:	01-Jun-2006
Complete List of Authors:	Marín, Sonia; Lleida University, Food Technology Morales, Hector; Lleida University, Food Technology Hasan, Hassan; Assiut University, Botany Ramos, Antonio; Lleida University, Food Technology Sanchis, Vicent; Lleida University, Food Technology
Methods/Techniques:	Chromatography - HPLC, Clean-up, Extraction, Mycology
Additives/Contaminants:	Mycotoxins - fungi, Mycotoxins - other
Food Types:	Fruit, Fruit juices

SCHOLARONE™
Manuscripts

Patulin distribution in the tissue of *Penicillium expansum*-contaminated Fuji and Golden apples

S. Marín, H. Morales, H.A.H. Hasan, A.J. Ramos, V. Sanchis

Lleida University - Food Technology, Rovira Roure 191 Lleida Lleida 25198 (Spain)

Running head: Patulin accumulation and distribution in apples

For Peer Review Only

This work aimed to assess the extent of patulin contamination in *Penicillium expansum* infected apples stored at room temperature for short periods of time and its relationship with apple variety (Golden or Fuji), degree of ripeness, and size of lesions. Inoculated apples were incubated at 20℃. Cylindrical samples were taken around the lesions and cut into 0.5 cm thick sections in which patulin was determined in both the sound and the decayed tissue. Higher accumulation of patulin occurred in Golden apples with less ripened apples showing higher concentrations. Total accumulated patulin was similar or higher in 4-cm lesioned apples than in 2-cm ones, although a decrease in patulin concentration was observed in the older sections of the lesions. Patulin accumulation occurred in a short period of time at room temperature thus stand-by periods before processing should be minimised. About 2-6% of total patulin was found to migrate to the surrounding sound tissue thus trimming apple tissue around the rotten part may be a good preventive practice for apple derivatives production.

Keywords: patulin, apple, *Penicillium expansum*, trimming, storage

For Peer Review Only

Introduction

Patulin is a mycotoxin produced by a number of fungi common to fruit- and vegetable products, most notably apples. Patulin production is usually, but not exclusively, associated with apple soft rot and blue mould rot, most commonly caused by *Penicillium expansum* (Brian et al. 1956). Within the food industry, apples and their respective products are of greatest concern for patulin contamination. Numerous studies around the world have examined the extent and degree to which apple products have been contaminated by patulin, finding high percentages of apple juice samples contaminated by patulin in levels exceeding the 50 ng g^{-1} limit imposed by the EC (Comission Regulation 1425/2003) (Moake et al. 2005).

The health risks posed by patulin necessitate its control and removal from apple products, creating a demand for food-processing techniques capable of doing so, preferably at low cost for industry (Moake et al. 2005). In many countries apple juice is typically a by-product produced from culled apples unfit for other, higher quality and higher profit, purposes. Bruises, skin breaks, and other physical damage within these apples provide a perfect entry for *P. expansum* and other patulin-producing species into the fruit (Moake et al. 2005). Low quality apples originating from storage rooms (either controlled atmosphere (CA) or not) are also usually employed for apple juice production. As a result, the use of low quality raw material leads to highly patulin contaminated apple juices. In Spain, juice concentrates are mainly produced from Golden apples, although Fuji apples are sometimes used when they are not suitable for fresh consumption. The exposition of these *P. expansum* infected apples intended for juice production to room temperature for short periods of time during postharvest operations has been shown to be critical for the accumulation of patulin (Marín et al. 2006; Morales et al. 2006a).

For Peer Review Only

At present, many juice industries rely on high-pressure water application as a means of removing the rotten parts of apples. However, some previous studies have suggested that patulin may have diffused to the healthy tissue (Taniwaki et al. 1992; Rychlik and Schieberle 2001). The present work aimed to assess the extent of patulin contamination in infected apples stored at room temperature (20℃) in both rotten and healthy tissues, as a function of apple variety (Golden and Fuji) and apple ripeness.

Material and methods

Isolates

A strain of *Penicillium expansum* 3.78 isolated from cold stored apples in Lleida (Spain) was used. The strain was stored in sloped potato dextrose agar (PDA) tubes at 5ºC in the Fungal Collection of the Food Technology Department of Lleida University.

Apples

Apples var. Golden and var. Fuji were used for the experiment. For each variety, two lots with different degree of ripeness were used (6 apples per lot). Quality parameters were determined before inoculation for both Fuji and Golden apples belonging to each lot, lot A being the less ripened one and lot B the more ripened one (Table I). Firmness was measured on two opposite peeled sides using a penetrometer fitted with an 11 mm diameter probe.

Soluble solids concentration (SSC) was determined by measuring the refractive index of the juice resulting from apples, and the data were expressed as percentage (g per 100 g fresh weight (FW)).

For Peer Review Only

Acidity was measured as follows: 10 ml of pulp juice was diluted with 10 ml H_2O and titrated with a 0.1 mol l^{-1} NaOH solution. The acidity was expressed in grams of malic acid per liter of juice.

Determination of quality parameters revealed that, apart from known differences among varieties, the lots differed mainly in colour, firmness and acidity, Golden apples from different lots being more different.

[insert table I about here]

Before inoculation, apples were surface disinfected with 2% sodium hypochloride, rinsed with water and excess water allowed to dry.

Conidial suspensions, apple inoculation and incubation

Petri dishes of PDA were point inoculated with the strain and incubated at 25°C until sporulation. A conidial suspension was prepared in Tween 80 (0.005% (v/v)) in sterile water and adjusted to 10^6 conidia ml^{-1}. Apples were wounded 2 mm deep with a 2 mm diameter needle twice in two opposite sides. Both points were inoculated with 20 µl of the conidial suspension.

Apples were stored at 20°C. For each variety, half of the apples were removed from incubation when their lesions were about 2-cm diameters (5 days), and the remaining ones, when the lesions were 4-cm wide (7-8 days). Incubation at 20°C was carried out to simulate the interval of time that apples may be at room temperature before processing.

For Peer Review Only

Obtaining sections from apples

For apples with 2-cm lesions, a concentric 3-cm cylinder was taken around each lesion with the aid of a die-cut. From each cylinder, 0.5 cm sections were cut across starting from the surface of the apple (Figure 1); when no lesion was observed in one section, one more section was taken in depth. From all the sections, those visible decayed were divided in two samples: sound and rotten, while the sound sections were considered as a single sample. The same procedure was applied to 4-cm lesions, although in this case the cylinder had 5.5 cm of diameter.

[insert figure 1 about here]

Patulin analyses

Eight ml distilled water were added to the sound/decayed samples. A “Polytron” unit of Kinematica AG (Swizerland) was used to pulp them. Puree samples were enzymatically treated to remove pectins and allowed to react for 1 h at 40℃. After that, samples were centrifuged at 6000 rpm for 5 min and 5 ml of the supernatant were analysed following AOAC method 995.10 (Brause et al. 1996). Patulin was extracted with ethyl acetate and then cleaned up by extraction with sodium carbonate solution. Extracted samples were dried with anhydrous sodium sulphate. After evaporation of ethyl acetate, patulin was re-suspended in water pH 4 (adjusted with acetic acid) and determined by reversed-phase LC with UV detection. The mobile phase was water+tetrahydrofuran (100+0.8) at a flow rate of 1.2 ml min^{-1}. Patulin was detected at UV at 276 nm wavelength. The recovery rates obtained by spiking apple pieces with 10, 40, and 100 ng patulin g^{-1} in duplicate were of 96.2, 88.5 and 69.1%, respectively. Regarding repeatability the S_r of five determinations (25 ng g^{-1}) carried out under repeatability conditions was 0.005. Finally the limit of detection of the analysis was

For Peer Review Only

between 0.8 and 10 ng g^{-1} (depending on the initial amount of sample) for the sound samples and between 3 and 100 ng g^{-1} for the decayed ones.

Statistical analysis of the results

The whole experiment was designed as a full factorial one, with 4 factors to be tested on the patulin accumulated by *P. expansum*: apple variety, degree of ripeness, size of lesion, depth from the surface of the apple. The variables recorded were concentration of patulin both in the decayed and the sound samples from each section. All treatments were repeated three times. Patulin concentrations for each treatment were evaluated by analysis of variance using the SAS version 8.2 (SAS Institute Inc., Cary, NC, USA). Significant differences ($P<0.05$) in parameters were tested by a Duncan's Multiple Range Test.

Subsequently, total patulin (µg) in each section and for both healthy and decayed fractions was calculated taking into account both patulin concentration and the weight of each sample. Percentage of difused patulin was calculated by adding the patulin contained in the healthy fractions of the sections and dividing by the total patulin found in the decayed fractions of the sections.

Results

An initial analysis of the variance of the whole set of data revealed that the concentration of patulin in both the decayed and sound portions significantly depended on lesion diameter, apple variety, and on degree of ripeness for Fuji apples (Table II). Patulin concentrations found in the sections were significantly higher for 2-cm lesions than for 4-cm ones. Variety was the main factor affecting patulin content in the sections analysed, due to the markedly higher concentration found in Golden than in Fuji apples, regardless of the other factors tested. For the patulin content in the sound

For Peer Review Only

sections degree of ripeness had some influence on the results, depending on variety and lesion size. Data were thus analysed separately for each lesion size tested (2 and 4 cm diameter) (Table III).

[insert table II and III about here]

For apples with a 2-cm lesion, Golden ones had mean concentrations of 9.67 and 0.28 µg g^{-1}, in the decayed portion and surrounding one, respectively. For Fuji apples these concentrations were 3.31 and 0.13 µg g^{-1}, respectively (Figure 2). No significant difference due to different degree of ripeness was observed as a single factor, however, under ripe Fuji apples yielded significantly higher concentrations of patulin in both sound and decayed sections. For both sound and decayed sections, most patulin was found in the upper section, with the second section containing significantly less, and finally levels of patulin found in the remaining sections were not significantly different. Due to the higher patulin levels produced in Golden apples, the distribution, and extent and levels of diffusion of patulin in both sound and decayed tissue depended on the variety.

For apples with a 4-cm lesion, Golden ones had mean concentrations of 4.98 and 0.11 µg g^{-1}, in the decayed portion and surrounding one, respectively. For Fuji apples these concentrations were 1.01 and 0.04 µg g^{-1}, respectively (Figure 3). No significant difference due to different degree of ripeness was observed in any of the varieties for patulin in the decayed portions; however, a significantly higher mean level was found in the sound sections of both varieties in the less ripen lot (0.09 *vs* 0.05 µg g^{-1}). In general, there was a decrease in patulin content with depth, the differences among successive sections being more marked for Golden than for Fuji apples.

For Peer Review Only

[insert figures 2 and 3 about here]

Total patulin contents found in each apple confirmed, besides the high variability of the results, the higher accumulation of patulin in Golden apples, and the lower accumulation in Fuji ones, mainly when they were riper (Table IV). Interestingly, total levels were quite similar for 2 and 4 cm lesions, due to the lower concentrations found in the sections in the 4 cm assay. Looking in detail at the results summarised in Fig. 2 and 3, it was observed a decrease in concentration in the first two sections in both sound and rotten tissue, and an increase in the concentration in the subsequent sections, plus the additional sections analysed and found to be positive in the 4-cm assay.

Regarding diffusion, patulin found in healthy tissue accounted for 2-6% of the total, more diffusion being observed for Fuji apples, and in under ripe apples for both varieties. In general, patulin was always found in the rings surrounding the lesions, and also in the 0.5-cm section next to the last section where rot symptoms were observed.

[insert table IV about here]

2-cm diameter lesions resulted in accumulated patulin to a depth of 1.5 cm, or even to 2 cm for under ripe Golden apples (Figure 4). For 4-cm diameter lesions, patulin was found at 2 and 2.5 cm depth for ripe and under ripe Fuji apples, respectively, and to 2.5 and 3 cm for ripe and under ripe Golden apples, respectively. At a given lesion size in the surface of the apples, the depth of the lesions reached in Golden apples was in general higher than in Fuji ones.

[insert figure 4 about here]

For Peer Review Only

Discussion

Patulin is a common contaminant of ripened apples used for the production of apple juice concentrates (Sydenham et al. 1997). No patulin has been detected in cider pressed from tree-picked fruit (culled or not culled). In contrast, cider produced from ground-harvested fruit contained up to 374 µg l^{-1}, depending on the varieties tested (Jackson et al. 2003). No patulin was detected in Golden apples after storage periods of 1-2.5 months of storage at 1°C (under CA or not) (Morales et al. 2006a, 2006b). Cold stored apples yielded free of patulin ciders if culled, but levels 0-64 µg l^{-1} if not culled (Jackson et al. 2003). The removal of fungally decayed and the surrounding tissue from apples, prior to further processing, has been reported to reduce significantly patulin levels in juiced products (Lovett et al. 1975; Sydenham et al. 1995).

In the present study, brown, watery rot increasing depth in rot as the lesion diameter increased was observed at 20°C. In agreement with Laidou et al. (2001), an increase in lesion diameter corresponded to an increase in depth of penetration of the fungi. Stand-by steps at room temperature (e.g. 20°C) prior juice concentrates manufacture have been shown to be a crucial point in patulin accumulation prevention (Morales et al. 2006a).

Patulin concentrations found in the sections were significantly higher for 2-cm lesions than for 4-cm ones, although the overall amount of patulin was similar in both cases. In Granny Smith apples deck-stored for 7, 15 and 33 days, patulin concentration increased from 90 to 2445 ng g^{-1}, but decreased to between 75 and 695 ng g^{-1}, respectively, following a water wash step. Subsequent removal of rotten/damaged fruit decreased patulin levels further (to between 55 and 405 ng g^{-1}, respectively) (Sydenham et al. 1997).

For Peer Review Only

Although high patulin concentrations were found in apples after 5 days, a decrease of concentration found in the rotten tissue was observed after 7-8 days, for both varieties. In rotten Golden delicious apples, in the decayed tissue, after a 2-days induction period, patulin increased and, after running through a maximum of 185000 ng g^{-1} after 5 days, decreased to 0.060 ng g^{-1} after 15 days (Rychlik and Schieberle 2001). Patulin metabolisation by fungal enzymes has been proposed (Damoglou et al. 1985). In their study, however, although patulin was significantly lower in the rotten area after 5 days, its content in juice made from the whole fruit remained on a high level of 1700 ng g^{-1} until the tenth day of incubation, before it finally decreased; this is in accordance with the trend observed in this study, because total patulin content in apples was similar for 5 and 8 days of incubation. This phenomenon may be attributed to the exponential increase of the rotten part by volume during fungal invasion and to patulin diffusion into the sound tissue (Rychlik and Schieberle 2001).

Our results showed that between 2 and 6% of total patulin was found in the sound tissues of apples. The total patulin detected in apparently sound tissues of pears inoculated with *P. expansum* was nearly 25% of the total pear tissues (diseased and healthy) (Laidou et al. 2001). Less than 1% of the total patulin was found in sound tissues of apples inoculated with *P. expansum* (Harwing et al. 1973). A similar study was carried out in *P. expansum* inoculated pears kept at room temperature (18-20℃) till lesions expanded to 10 mm in diameter; in this case 6 mm thick sections were obtained. Patulin was detected in the first three sections at concentrations of 288000, 144000 and 144000 ng g^{-1} from outside to inside of fruits. Patulin could diffuse through 6 mm in sound tissues (Laidou et al. 2001). Apples inoculated with *P.expansum* showed diffusion of patulin up to approximately 10 mm into the surrounding healthy tissues; most of the patulin being present in the first 1 cm of the lesion (6.5 to >10 000

For Peer Review Only

ng g^{-1}, depending on apples) (Taniwaki et al. 1992). No patulin was found at a distance of more than 2 cm from the infected zone (83700 ng g^{-1}) in Golden delicious apples (1270 ng g^{-1} at 1 cm, 4.7 ng g^{-1} at 2 cm and <ld at >3cm) (Rychlik and Schieberle 2001).

Fruit cultivars seem to differ in their susceptibilities to *P. expansum* rot and to contamination with patulin. More patulin was always accumulated in Golden apples (2-6-fold) which were softer and more acidic. Regarding degree of ripeness, higher production was observed in less ripen apples, mainly for Fuji apples, suggesting that high acidity, more than softness was the cause for the improved production, as firmness varied only slightly, and a higher production in more firm apples is unlikely to occur. In fact, pH and patulin production have been shown to be inversely related, with patulin being unstable at high pH (McCallum et al. 2002). Also, Beer and Amand (1974) reported that the amount of patulin produced in apples artificially inoculated with *P. expansum* was inversely proportional to the firmness of the apple.

Total patulin in the sections, diseased and healthy, of apples was between 15 and 115 µg, depending on varieties and degree of ripeness. Harwing et al. (1973) showed that one rotten apple could contain 0.02-17.7 mg patulin. Patulin content of pears inoculated with *P. expansum* was nearly 580 µg g^{-1} (Laidou et al. 2001). Although large variability across literature, and within experiments, can be observed in the reported patulin levels in both inoculated and non-inoculated fruit, the concentrations are, in general, too high in view of obtaining final apple derivatives with levels < 50 ng g^{-1}, as stated in the EU regulations.

For Peer Review Only

Although this study was developed to simulate what it may happen in apples after cold storage, the results may also be applied to ground-picked *P.expansum* infected apples, left in the ground for a certain period of time, and to any other harvested apples which undergo any standby period at room temperature before processing, as long as they have been infected.

As a conclusion, patulin accumulation can occur in a short period of time in *P. expansum* infected apples left at room temperature and attain dramatically high levels. The concentration of patulin seems to be dependent on apple variety and, in particular, on acidity, more acidic conditions leading to a higher production of patulin. In addition, trimming just the rotten tissue is not enough to exclude all patulin, but trimming apple tissue around the rotten part may be a good preventative practice for industry using apple products. Accordingly, Lovett et al. (1975) removed more than 93% of patulin by trimming effective apple tissue from mould-infected rotten apples. One more conclusion is that washing with a high-pressure water spray, is a good control method, but not sufficient to totally eliminate the toxin as it may remove just the soft rotten tissue. Consequently, either trimming or culling should be considered as a routine practice in industries using apples as raw materials.

References

Beer SV, Amand JK. 1974. Production of the mycotoxin patulin in mature fruits of five apple cultivars infected by *Penicillium expansum*. Proceedings of the American Phytopathological Society 1:104-110.

Brause AR, Trucksess MW, Thomas FS, Page WS. 1996. Determination of patulin in apple juice by liquid chromatography: Collaborative study. Journal of the AOAC International 79:451-455.

For Peer Review Only

Brian PW, Elson GW, Lowe D. 1956. Production of patulin in apple fruits by *Penicillium expansum*. Nature 178:263-264.

Damoglou AP, Campbell DS, Button JE. 1985. Some factors governing the production of patulin in apples. Food Microbiology 2:3-10.

European Union, Official Journal of the European Communities (EC), *Commission regulation 1425/2003 amending Comission Regulation 466/2001 setting maximum levels for certain contaminants in foodstuffs* (2001). Brussels, Belgium, pp. L203/1-3.

Harwing J, Chen YK, Kennedy BPC, Scott PM. 1973. Occurrence of patulin and patulin-producing strains of *Penicillium expansum* in natural rots of apple in Canada. Canadian Institute of Food Science and Technology Journal 6:22-25.

Jackson LS, Beacham-Bowden T, Keller SE, Adhikari C, Taylor KT, Chrtel SJ, Merker RI. 2003. Apple quality, storage, and washing treatments affect patulin levels in apple cider. Journal of Food Protection 66:618-624.

Laidou IA, Thanassoulopoulos CC, Liakopoulou-Kyriakides M. 2001. Diffusion of patulin in the flesh of pears inoculated with four post-harvest pathogens. Journal of Phytopathology 149:457-461.

Lovett J, Thompson RG, Boutin BK. 1975. Trimming as a means of removing patulin from fungus-rotted apples. Journal of the AOAC International 58:909-911.

For Peer Review Only

Marín S, Morales H, Ramos AJ, Sanchis V. 2006. Evaluation of growth quantification methods for modelling of *Penicillium expansum* growth in an apple-based medium. Journal of the Science of Food and Agriculture (in press).

McCallum JL, Tsao R, Zhou T. 2002. Factors affecting patulin production by *Penicillium expansum*. Journal of Food Protection 65:1937-1942.

McGuire R. 1992. Reporting of objective color measurements. HortScience 27:1254–1255.

Moake MM, Padilla-Zakour OI, Worobo RW. 2005. Comprehensive review of patulin control methods in foods. Comprehensive reviews in Food Science and Food Safety 1: 8-21.

Morales H, Marín S, Rovira A, Ramos AJ, Sanchis V. 2006a. Patulin accumulation in apples by *Penicillium expansum* during postharvest stages. Letters in Applied Microbiology (in press).

Morales H, Sanchis V, Rovira A, Ramos AJ, Marín S. 2006b. Patulin accumulation in apples during postharvest: Effect of controlled atmosphere storage and fungicide treatments. Food Control (submitted).

Rychlik M. Schieberle P. 2001. Model studies on the diffusion behaviour of the mycotoxin patulin in apples, tomatoes, and wheat bread. European Food Research and Technology 212:274-278.

For Peer Review Only

Sydenham EW, Vismer HF, Marasas WFO, Brown NL, Schlechter M, Rheeder JP. 1995. Reduction of patulin in apple juice samples-influence of initial processing. Food Control 6:195-200.

Sydenham EW, Vismer HF, Marasas WFO, Brown NL, Schlechter M, Rheeder JP. 1997. The influence of deck storage and initial processing on patulin levels in apple juice. Food Additives and Contaminants 14:429-434.

Taniwaki MH, Hoenderboom CJM, de Almeida Vitali A, Uboldi Eirog ME. 1992. Migration of patulin in apples. Journal of Food Protection 55:902-904.

For Peer Review Only

FIGURE CAPTIONS

Figure. 1. Schematic distribution of the obtained sections from each apple cylinder.

Figure 2. Distribution of patulin (µg g^{-1}) in healthy and decayed tissue in apples with 2-cm lesions.

Figure 3. Distribution of patulin (µg g^{-1}) in healthy and decayed tissue in apples with 4-cm lesions.

Figure 4. Patulin (µg g^{-1}) found in each section (rotten plus healthy tissue) as a function of depth from the surface of the rotten apples. □, 2-cm lesion, lot A; ○, 2-cm lesion, lot B; ■, 4-cm lesion, lot A; ●, 4-cm lesion, lot B.

For Peer Review Only

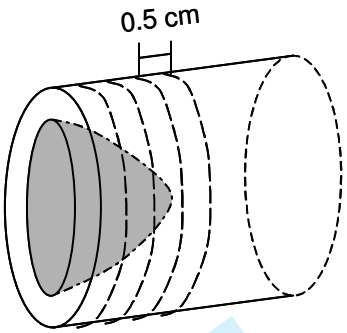

14

For Peer Review Only

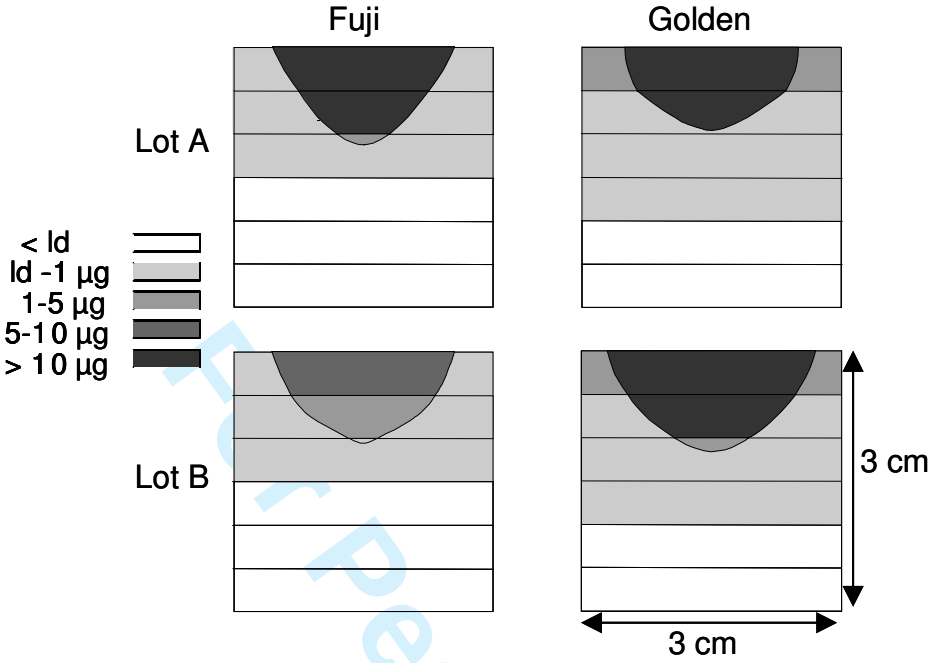

15

For Peer Review Only

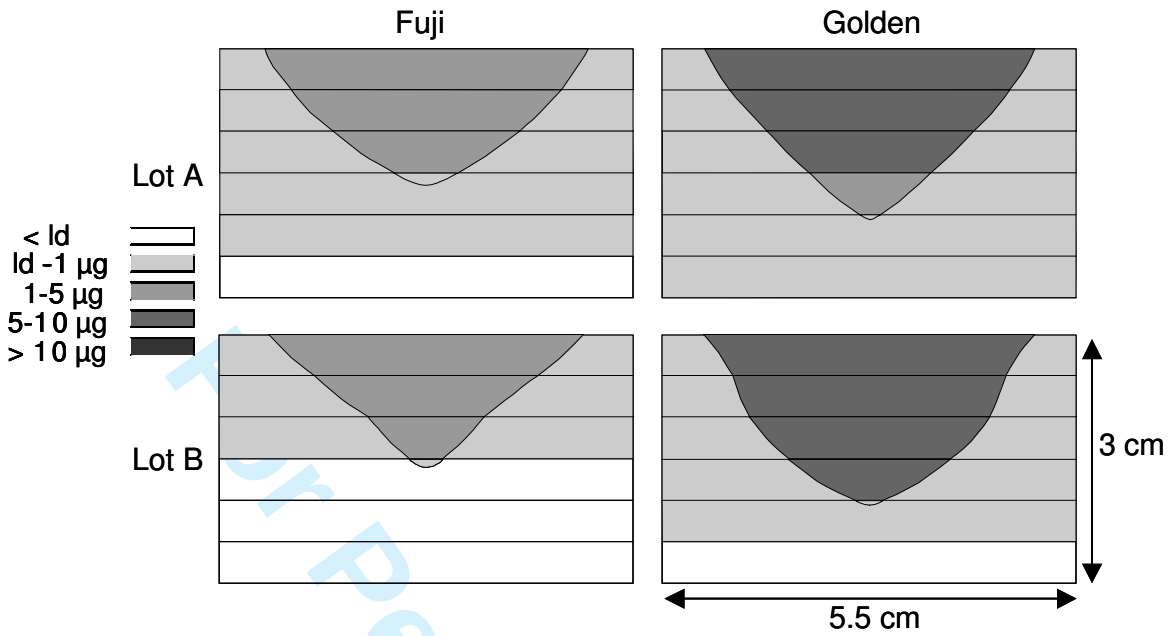

16

For Peer Review Only

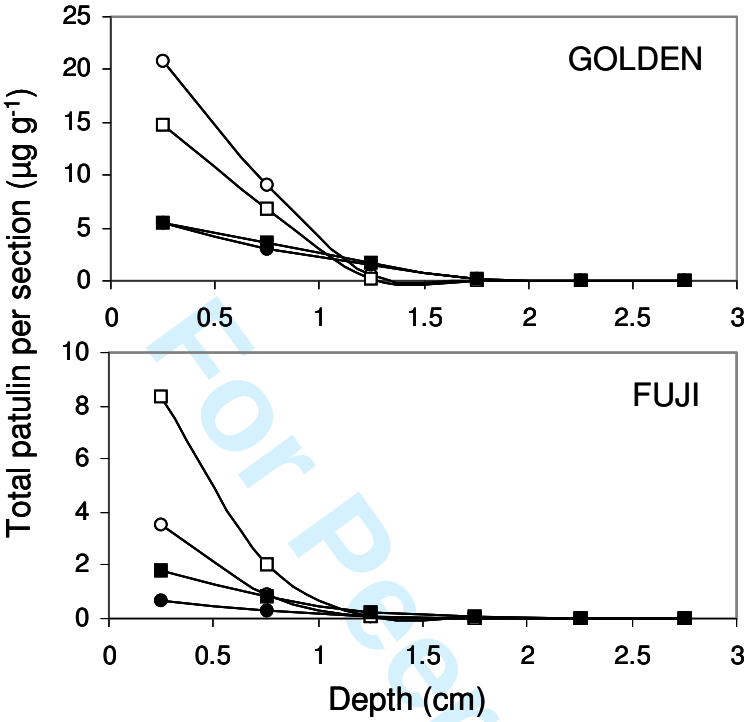

For Peer Review Only

Table I. Relevant quality parameters for the two different lots of Golden and Fuji apples. Values are the mean of three determinations made for 3 different apples. For each row, different letters mean significant differences among the mean values of the measured parameter.

Quality parameters	Golden		Fuji	
	Lot A	Lot B	Lot A	Lot B
Firmness (kg)	6.77b	4.74c	7.85a	7.55a
Soluble solids concentration (°Brix)	14.8a	14.7a	14.5a	15.17a
Acidity (g malic acid l^{-1})	10.68a	9.03b	6.88c	5.36d

For Peer Review Only

Table II. Analysis of variance of patulin concentration found in decayed and sound sections of apples.

Source of variation		Decayed samples		Sound samples	
	DF	MS	F	MS	F
Ripeness (R)	1	18.26	0.53	0.06	1.25
Variety (V)	1	1731.39	50.01**	1.05	23.90**
Depth section (D)	5	1320.05	38.13**	1.92	43.50**
Lesion size (L)	1	1045.36	30.20**	1.87	42.40**
R x D	5	23.23	0.67	0.01	0.23
R x V	1	169.44	4.89*	0.36	8.10**
V x D	5	360.11	10.40**	0.45	10.27**
L x R	1	33.83	0.98	0.00	0.09
L x V	1	99.07	2.86	0.23	5.33*
L x D	4	859.79	24.84**	1.05	23.78**
R x V x D	4	9.81	0.28	0.15	3.39*
L x R x D	3	6.20	0.18	0.00	0.01
L x R x V	1	59.60	1.73	0.40	9.02**
L x V x D	4	210.76	6.09**	0.18	4.09**
L x V x D x R	3	31.60	0.91	0.17	3.96**

**P<0.01

*P<0.05

For Peer Review Only

Table III. Analysis of variance of patulin concentration found in decayed and sound sections of apples; separate analysis are shown for each lesion diameter.

Source of variation		Decayed samples				Sound samples			
		2 cm		4 cm		2 cm		4 cm	
	DF	MS	F	MS	F	MS	F	MS	F
Ripeness (R)	1	33.85	0.79	1.70	0.12	0.02	0.27	0.05	8.59*
Variety (V)	1	1457.53	34.02*	554.62	37.55*	1.27	18.88*	0.16	26.82*
Depth section (D)	5	2346.35	54.77*	156.06	10.57*	3.06	45.30*	0.15	25.65*
R x D	5	24.97	0.58	5.67	0.38	0.01	0.11	0.01	1.05
R x V	1	151.66	3.54*	12.58	0.85	0.51	7.50*	0.00	0.17
V x D	5	559.37	13.06*	57.96	3.92*	0.56	8.35*	0.05	9.02*
R x V x D	5	38.84	0.91	3.59	0.24	0.26	3.91*	0.01	1.29

*P<0.05

For Peer Review Only

Table IV. Mean total patulin (µg) found for each treatment.

Rotten zone	Apple variety	Ripeness	Mean total patulin ± SD	% in decayed portion	% Diffused
2 cm	Fuji	Lot A	33.44±10.53	94	6
		Lot B	15.46±5.07	96	4
	Golden	Lot A	65.10±24.49	96	4
		Lot B	93.71±61.32	97	3
4 cm	Fuji	Lot A	39.12±22.51	94	6
		Lot B	16.20±7.55	94	6
	Golden	Lot A	115.89±84.47	96	4
		Lot B	91.75±63.90	98	2

For Peer Review Only

For Peer Review Only