HAL
open science

Tool path generation and post-processor issues in five-axis high speed machining of hydro turbine blades

Christophe Tournier, Cedric Castagnetti, Sylvain Lavernhe, François Avellan

To cite this version:

Christophe Tournier, Cedric Castagnetti, Sylvain Lavernhe, François Avellan. Tool path generation and post-processor issues in five-axis high speed machining of hydro turbine blades. Fifth International Conference on High Speed Machining, Mar 2006, Metz, France. hal-00577235

HAL Id: hal-00577235

https://hal.science/hal-00577235v1

Submitted on 17 Mar 2011

HAL is a multi-disciplinary open access archive for the deposit and dissemination of scientific research documents, whether they are published or not. The documents may come from teaching and research institutions in France or abroad, or from public or private research centers.

L'archive ouverte pluridisciplinaire **HAL**, est destinée au dépôt et à la diffusion de documents scientifiques de niveau recherche, publiés ou non, émanant des établissements d'enseignement et de recherche français ou étrangers, des laboratoires publics ou privés.

TOOL PATH GENERATION AND POST-PROCESSOR ISSUES IN FIVE-AXIS HIGH SPEED MACHINING OF HYDRO TURBINE BLADES

Christophe Tournier (1), Cédric Castagnetti (1,2), Sylvain Lavernhe (1), François Avellan (2)

(1) Laboratoire Universitaire de Recherche en Production Automatisée ENS de Cachan/Université Paris Sud 11
61 Avenue du Président Wilson, 94235 Cachan Cedex - France
Tel.: +33 (0) 1 47 40 22 11 - Fax.: +33 (0) 1 47 40 22 20 - name@lurpa.ens-cachan.fr

(2) EPFL - Laboratory for Hydraulic Machines, Swiss Federal Institute of Technology, Av. de Cour 33Bis
CH - 1007 Lausanne/Switzerland
Tel.: +41 (21) 693-2505 - Fax: +41 (21) 693-3554 - françois.avellan@epfl.ch

Abstract:

This paper deals with 5-axis milling of hydraulic blades. The issue developed is essentially linked to problems due to the transition from 3 to 5 axes. A specific attention is done to the Inverse Kinematics Transformation (IKT) which can be source of incoherent behavior during machining due to possible multiplicity of solutions. Such behaviors may lead to slowdowns during machining which affect productivity. Moreover, geometrical surface finish may be altered. To study this phenomenon, we propose to machine a test part with the objective to reach the required quality while preserving productivity. After the analysis of the problems linked to the IKT through specific trajectories we propose solution to solve such problems, based on the local modification of the trajectory. The context of the work is a collaboration between the LMH and the LURPA.

Keywords: five-axis machining, high speed machining, inverse kinematical transformation, tool path computation.

1 Introduction

The Laboratory for Hydraulic Machines (LMH) of the Ecole Polytechnique Fédérale de Lausanne (EPFL) carries out teaching, research and services in the field of hydrodynamics rotating machines such as hydraulic turbines, pumps, pump-turbines, ship propellers etc. Within the context of the European project Hydrodyna [1], the LMH is involved in the realization of tests on 1/10 scaled models. The hydraulic machine of the Hydrodyna project is a pump-turbine made of three main parts: the spiral case or volute, the distribution and the wheel (figure 1). The turbine is composed of several parts with different types of copper blades: the fixed guide vanes, which support the mechanical strains due to both water pressure and flow in the stay ring; the wicket gates, which regulate the discharge in the runner by changing the opening angle; the runner blades, which convert the hydraulic energy in mechanical energy.

As LMH has just acquired a new 5-axis high speed milling center, the objective of the collaboration with the Laboratoire Universitaire de Recherche en Production Automatisée (LURPA) is to study the feasibility of blade manufacturing in 5-axis High Speed Milling (HSM). Indeed, these parts present complex geometries for which collisions, surface roughness and productivity issues arise.

The use of 5-axis HSM allows profits in productivity by optimizing tool trajectories and by minimizing the number of part setups. Nevertheless, 5-axis machining requires a better expertise than 3-axis machining since both tool path planning and tool path computation are especially important. Indeed, problems of tool collision as well as the kinematical behavior of the machine tool have a strong influence on the machining progress and on the quality of machined parts.

This paper deals with the machining of the fixed guide vanes (figure 2). In the first section, problems involved by the Inverse Kinematical Transformation (IKT) are exposed. More particularly, a specific attention is done on the problem of IKT multiple solutions and on singularities, which generate collisions or incoherent movements disturbing machining. The second section is dedicated to the illustration of encountered problems in 5-axis machining using test parts, which prompt machine tool axes differently. Finally, some solutions to overcome inverse kinematical transformation problems are proposed.

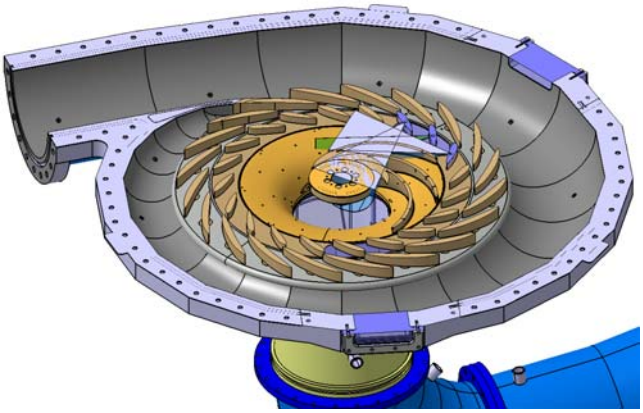

Figure 1: hydraulic pump-turbine

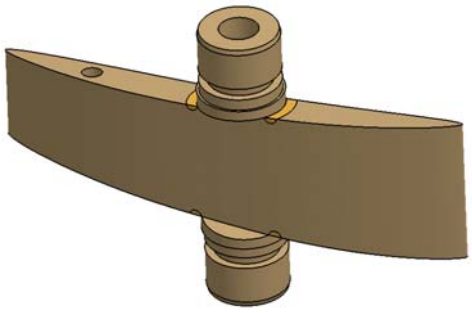

Figure 2: fixed guide vane

2 Inverse Kinematical Transformation

Tool path generation in 5-axis milling using CAM software leads to a trajectory expressed in the programming reference frame attached to the CAD model of the part. The trajectory is expressed as a set of cutter tool locations. Each cutter tool location is defined by (X_p, Y_p, Z_p), the coordinates of the driven point of the tool and (i, j, k), the projections of the tool axis direction onto each axis of the programming reference frame. In addition, a five dimension articular space linked to the three translation axes and the two rotation axes is associated to the 5-axis structure. Therefore, to be complete, the numerical chain must include a geometric transformation, which transforms cutter locations into displacement orders on each machine tool axis $(X_m, Y_m, Z_m, A/B \text{ or } A/C \text{ or } B/C)$. This transformation is called the Inverse Kinematical Transformation (IKT).

According to the Numerical Controller (NC) unit, several solutions are offered to the user to describe the tool trajectory, which is transmitted to the NC unit (figure 3). The first possibility is to directly send the tool trajectory expressed in the reference frame. In this case, the post-processor is used to translate the program generated by the CAM software into APT language (*ISO3592*) or into G code (*ISO6983*) language. The IKT is then carried out in real time by the NC unit. The main advantage of this approach is to keep the consistency within the numerical chain since the program would be the same whatever the machine tool structure used. Another solution is to use a dedicated post-processor the role of which is to compute the IKT. Hence, displacement orders on each axis are calculated in the articular space and are transmitted to the NC unit. This approach is more difficult to manage since we have to control the effective relative movements between the tool and the part and each axis velocity.

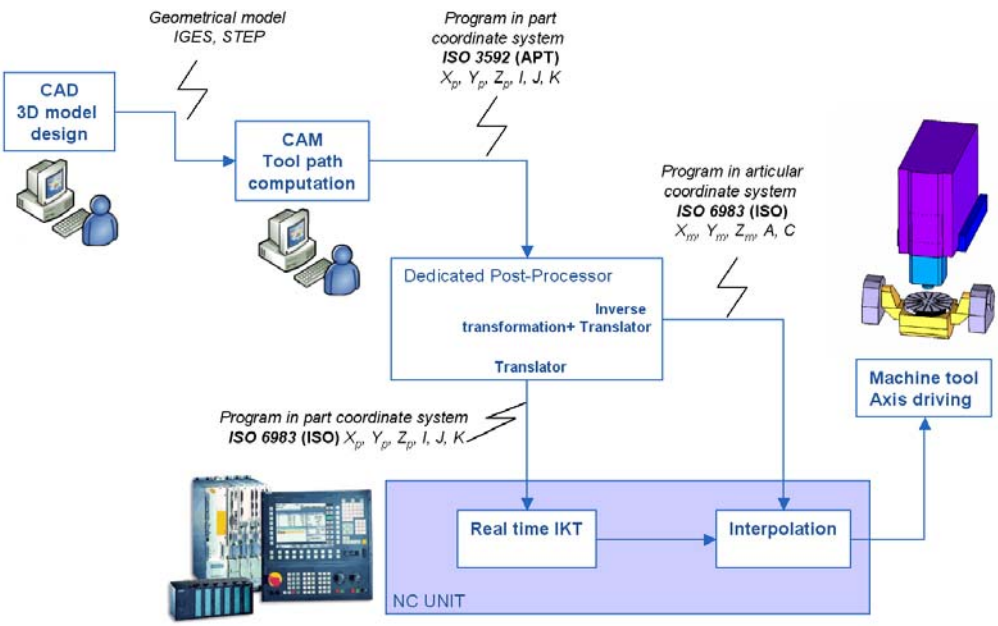

Figure 3: numerical chain in 5-axis milling

The machine tool of LMH is a 5-axis milling center Ferrari with a RTTTR structure with possible rotation on the *C* and *B* axes. The first one corresponds to the part rotation, and the second one is located on the spindle. Concerning the LURPA, the machine tool is a 5-axis milling center Mikron UCP710 with a RRTTT structure with rotation on the *A* and *C* axes on the part. As tests are carried out on both machine tools, we illustrate our remarks concerning the IKT problems using the Mikron machine tool. The same approach has been carried out with the Ferrari machine tool.

For the RRTTT structure, the IKT leads to solve the following equations, which have zero, one, two or an infinite number of solutions:

$$\begin{cases} i = \sin(C)\times\sin(A) \\ j = -\cos(C)\times\sin(A) \\ k = \cos(A) \end{cases} \qquad (1)$$

System (1) has two domains of solutions corresponding to $A>0$ or $A<0$, and solutions vary in function of the (i,j,k) values (table 1).

	i < 0	i = 0	i > 0
j < 0	A_1 = acos(k) C_1 = -atan(i/j)		
	A_2 = -acos(k) C_2 = -atan(i/j)+π		
j = 0	A_1 = acos(k) C_1 = -π/2	A=0 C undefined	A_1 = acos(k) C_1 = π/2
	A_2 = -acos(k) C_2 = π/2		A_2 = -acos(k) C_2 = -π/2
j > 0	A_1 = acos(k) C_1 = -atan(i/j)+π		
	A_2 = -acos(k) C_2 = -atan(i/j)		

Table 1. Domains of solutions (A_1,C_1) and (A_2,C_2).

Due to physical limitations, all solutions for *A* are not practically possible. Different possible cases arise according to *k* values:

- If k is included in the interval $]-1,ArcCos(|Amax|)]$, there is no solution; the programmed orientation is not practically reachable for it is out of the rotary axis range.

- If k is included in the interval $]ArcCos(|Amax|), ArcCos(|Amin|)]$, there is only one solution. This configuration is a major source of collisions between the tool and the part. Indeed, when maximum rotation on A axis is reached in a given space of solution (A_1,C_1), switching from domain 1 $(A_1>0)$ to domain 2 $(A_2<0)$ makes the table C rotates by 180°. This rapid movement may cause rear gouging. Moreover, during this movement, the displacement of the cutter contact on the surface is small; the relative velocity tool-surface is quite zero. As cutting conditions are not satisfied, velocity drops may cause marks on the surface.

- If k is included in the interval $[ArcCos(|Amin|),1[$, two opposite articular solutions (A_1,C_1) and (A_2,C_2) exist. The choice of a solution among those possible is generally solution of an optimization problem [4].

- Lastly, if $k = 1$, an infinity of solutions exists. In this case, as the tool axis is perpendicular to the table any configuration of the C axis is possible [2]. Although this configuration only appears when the cosine directors (i, j, k) is precisely equal to $(0,0,1)$, the resolution and the precision of the rotary axes actually define a conical volume that should not be crossed [3]. The deformation of the tool center trajectory and the tool axis orientation is proposed in [3] to avoid crossing this zone defined as the "cone of singularity".

values of k	]-1,ArcCos(|Amax|)]	]ArcCos(|Amax|), ArcCos(|Amin|)]	[ArcCos(|Amin|),1[	1
number of	0	1	2	∞
solutions	no solution	(A_2,C_2)	(A_1,C_1) or (A_2,C_2)	$A=0$ and C=unspecified

Table 2. Sets of solutions for the IKT.

The different solutions to the IKT problem or the absence of solution are a major source of problems in 5-axis milling as well as interference issues. This analysis of the inverse kinematical transformation will be useful to explain the difficulties which we encountered during the machining of the fixed guide vane in 5-axis milling on both the Ferrarri and the Mikron machines.

3 Machining strategy

Generally, manufacturers of small-scale hydraulic machine models wish to reach the best geometrical characteristics on lower and upper blade surfaces directly from the machining operation, and envisage a manual polishing operation to obtain the correct leading edge roughness. They can thus make the tool path overlap on the leading edges. The new challenge is now to directly machine the leading edge with the best quality possible in order to avoid manual polishing. However, this issue is seldom addressed. Most of the research works focus on finding the best machining strategies for lower and upper surfaces, with the objective to approach the expected roughness and/or to minimize vibrations [4][5][6].

Therefore, finding the best machining strategy for leading edge machining seems an interesting issue which can be useful not only for blade surfaces but also for any type of form presenting strong evolutionary curvature areas. Indeed, if we can make the assumption that on the lower and upper surfaces, the tool reaches the programmed feedrate it is not the case for the leading edges. Rotary axes have to rotate very quickly to make the tool turning all around the part, which generates strong accelerations. As illustrated through the example below, the rotary axis cannot ensure the programmed feedrate although this one is not very high. A programmed feedrate Vf = 2 m/min involves 65450°/min for the A or B rotary axis velocity. As the maximum velocity is 53280°/min for the Ferrari

and 5400°/min for the Mikron, the programmed federate cannot be reached. Dedicated machining strategies can help to improve machining performances.

To analyze this problem, let us consider a filleted end mill, a generic tool in 5-axis milling which geometry can be modified as a ball end mill or flat end mill. We associate to each cutter contact point C_C, the local coordinate frame defined by (C_C, $\boldsymbol{f}$, $\boldsymbol{n}$, $\boldsymbol{t}$), where $\boldsymbol{f}$ is the tool feed direction, $\boldsymbol{n}$ is the normal to the surface and $\boldsymbol{t}$ is the tangent vector to the surface defined so that $\boldsymbol{t} = \boldsymbol{f} \wedge \boldsymbol{n}$. Initially, the tool axis vector $\boldsymbol{u}$, $\boldsymbol{f}$ and $\boldsymbol{n}$ are coplanar. To orient the tool axis, two rotations are considered [7]: the tilt rotation θ_t around $\boldsymbol{t}$ and the yaw rotation θ_n *around* $\boldsymbol{n}$ (Figure 4). Values of θ_t and θ_n can be modified to control the scallop height [8], to avoid collisions [9] or to modify the rotary axis prompting [10]. For instance, they can be adapted to anticipate the evolution of the tool axis orientation on the leading edge in order to respect the tool feedrate (Figure 5).

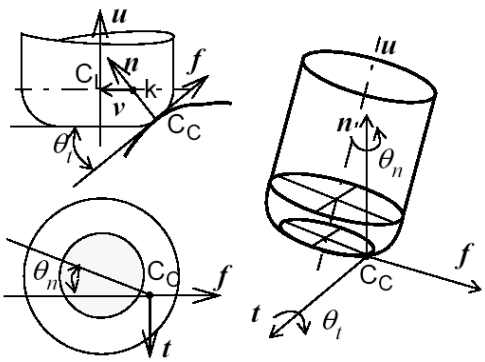

Figure 4: tool axis orientation

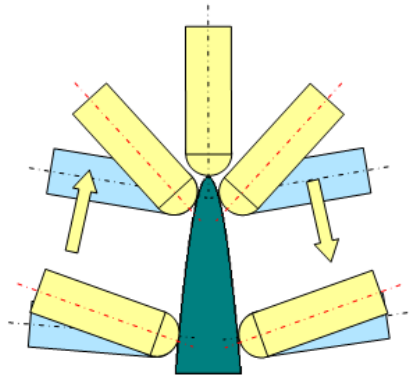

Figure 5: tool axis orientation anticipation on the leading edge.

We propose to use this strategy based on anticipated orientations of the tool axis so that velocities and accelerations of the rotary axes are less important, with the aim of reaching the programmed feedrate. A test part is thus created in order to prompt the rotary axis *A* which is the slowest (Figure 6). The part presents an evolutionary curvature along the leading edge in order to test performances of the *A* axes. Tests are carried out on both 5-axis machining centers. Nevertheless, tests carried out on the MIKRON UCP710 are more detailed as the numerical controller Siemens 840D offers the possibility of monitoring axis characteristic during machining (position, velocity, etc.).

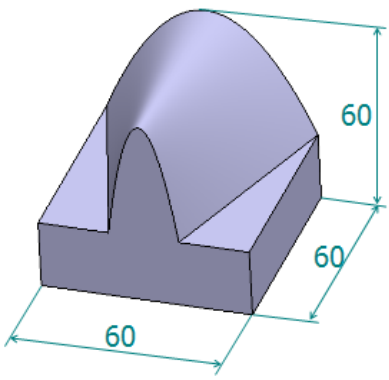

Figure 6: A axis test part

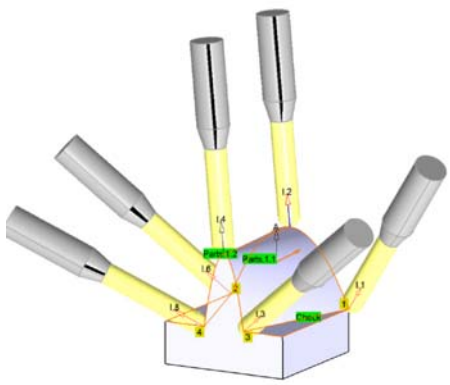

Figure 7: "interpolation" strategy

4 Experiments

We used four different machining strategies to carry out the finishing milling of the part based on a tool guiding according to iso-parametric curves of the surface. For each strategy the management of the tilt and yaw angles varies (Table 3).

Strategy	**« fixed angle » 1**	**« fixed angle » 2**	**« interpolation » 3** *Interpolation between three tool positions(Figure7)*	**« interpolation » 4** *Interpolation between three tool positions(Figure7)*
Tilt angle	*0°*	*5°*	*Start point : 0°* *Middle point : 0°* *End point : 0°*	*Start point : +30°* *Middle point : + 5°* *End point : -20°*
Yaw angle	*0°*	*0°*	*Variable*	*Variable*
Other parameters	5 mm radius **ball end mill**; Machining tolerance = 0.01 mm ; Scallop height = 0.01 mm ; Max sampling step = 0.1 mm ; Max sampling angle = 1°.			

Table 3: machining strategies

4.1 Test part machining

4.1.1 Collisions when swapping from one solution range to the other

For the first three strategies and whatever the machine tool used, the "A axis" test part cannot entirely be machined without swaps from one space of solutions to the other one. Indeed, the calculated amplitude of the *A* axis rotation exceeds axis range limits for every strategy except for the fourth. In this case, the amplitude of *A* axis rotation is reduced by 50° due to the tool axis orientation management. Values of the *A* and *C* angles to be reached and computed by the post-processor of the MIKRON are reported in figure 8. We clearly see the discontinuity when the *A* axis reaches one of its limits A_{min}: it swaps from A_{min} to $-A_{min}$, whereas the *C* axis makes a half turn (rotation of 180°).

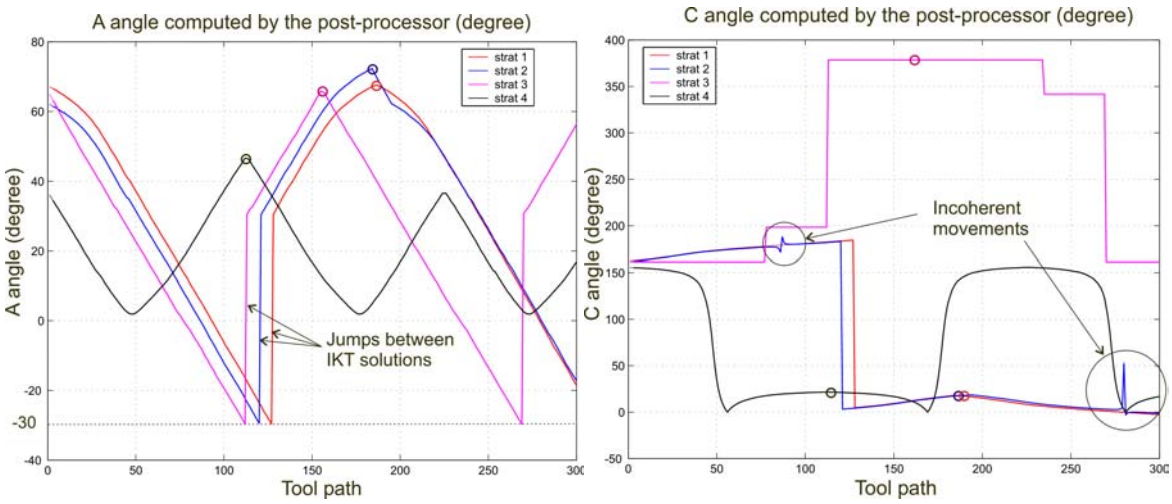

Figure 8: rotary axes commands during machining

This discontinuity generates significant variations in the axis command. The resulting movement between the two successive positions, before and after the discontinuity, depends on the reference frame in which axis commands are computed. Generally, in the part reference frame $(X_p, Y_p, Z_p\ i, j, k)$, the machine must ensure the coordination of the 5 axes (figure 9). But in our case, the machine detects the end of the *A* axis range and does not find the opposite solution, stopping the machining. We then use the alternative mode for which movement instructions transmitted to the NC unit are (X_p, Y_p, Z_p, A, C). Calculation of the *A* and *C* angles is previously carried out by the post-processor. If

the program described the movement of the tool extremity, swapping from one solution to the opposite one generates a mark on the part. Hence, a collision appears between the tool and the part (figure 10). Indeed, the machine does nothing but controls the extremity of the tool without considering the part and tool volumes. The position of the tool extremity point is calculated by the CAM software to ensure a tangent contact to the part for a given orientation of the tool axis. The great displacement of the part thus generates a modification of the tool axis orientation relatively to the part that means a modification of the contact point. The collision is unavoidable, even if the tool remained fixed in the part reference frame.

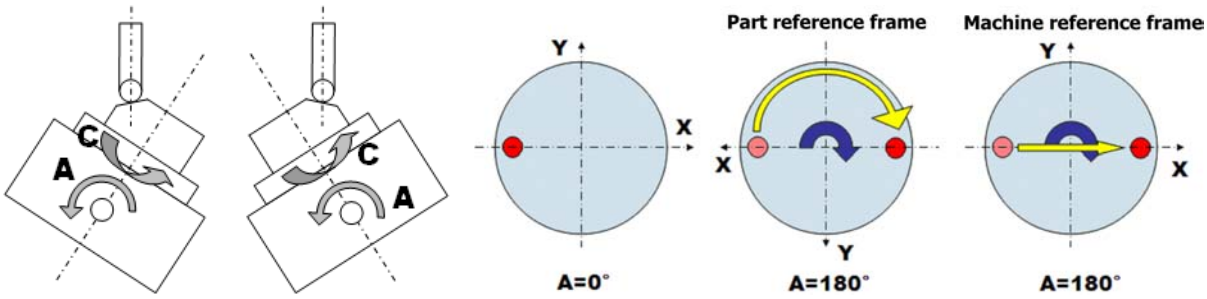

Figure 9: movement between the tool and the part according to the programming frame

In the case of ball-end cutter tool milling, for a given position of the tool center point any orientation of the tool axis preserves the tangent contact between the tool and surface. Then the solution consists in programming the trajectory of the tool center in the CAM system and to decrease the declared tool length in the machine by the tool radius value. With this solution, the collision does not appear but nevertheless we can observe a mark left by the tool. This mark may come from an error of the declared tool length or the declared characteristic length of the machine.

Besides, when axis commands are described in the machine reference frame (X_m, Y_m, Z_m, A, C), there is no coordination. For instance, when the table turns by 180°, the tool trajectory does not follow the movement of the table in order to maintain constant the relative position between the tool and the part (figure 9). The NC unit only manages axis synchronization in the articular space: axes must start and arrive at the same time. The task dedicated to the post-processor is the sampling of the movement in order to reduce the relative movement. In other words, the collision between the tool and the part is unavoidable. In the literature this behavior generates errors qualified as “kinematical errors” [11]. Since, errors are larger when programmed movements are longer, this phenomenon often appears during roughing, and is sometimes associated to jumps between rotary axis configurations.

A solution to the collision when swapping from one solution space to the other one could be the introduction of additional tangent movements before and after swapping. Therefore, the transition between the two positions would be done while the tool is located on a retract plane for instance. Nevertheless, this kind of solution is not optimal as it breaks the numerical chain. Indeed, rotary axis limit is linked to the considered machine tool, which is not known during CAM programming, especially in a decentralized world market with overseas production.

Figure 10: collisions and marks during jumps between IKT solutions

4.1.2 Incoherent movements

During the machining of the part with the strategy 2 (constant 5° tilt angle), we observed incoherent *C* axis movement when the tool is close to the singularity (figure 8). This movement appears very locally for each path but with different amplitudes, and strongly slows down the machining which generates marks on the part. By extracting lines from the ISO code corresponding to the tool path, we note a discontinuity in table evolution (see appendix).

After checking the program expressed in the part reference frame, we note that the location is not exactly at the singularity point. If strategies 1 (null tilt angle) and 2 (constant 5° tilt angle) are compared, we can notice that the singularity point is not approached in the same way. For strategy number 1, the passage at the neighborhood of the singularity and the inversion of the sign of *j* (from $A>0$ to $A<0$) are performed whereas *i* is almost null. In the case of the strategy, the inversion of the sign of *j* is done whereas *i* is not null (figure 11).

From this statement, we studied the evolution of the function $C = -Arctan(i/j)$ all tool path long for the four strategies. The iso-value lines of the *Arctan* function (in blue) and the coordinates *i* and *j* of the tool axis orientation for each point of the considered tool path are plotted in figure 11. Strategies 1 and 2 present a similar behavior but are shifted by a value of *j* corresponding to the 5° tilt angle. Strategies 3 and 4 present a linear behavior due to the constant *i/j* ratio. The offset between the two curves when $i = 0$ is due to the 5° tilt angle difference on the leading edge.

The graph proposed in figure 11 allows the calculation of the gradient associated to the rotation of the *C* axis. For example, considering strategy 4, *C* axis quickly varies from values close to 135° to 0°. By zooming near the singularity point $(i=0,\ j=0)$, we can observe for strategy 2 a point of the trajectory for which the value of the *C* angle is approximately 52°. As the iso-value lines are very tightened in this zone, any point will generate a rapid movement during machining.

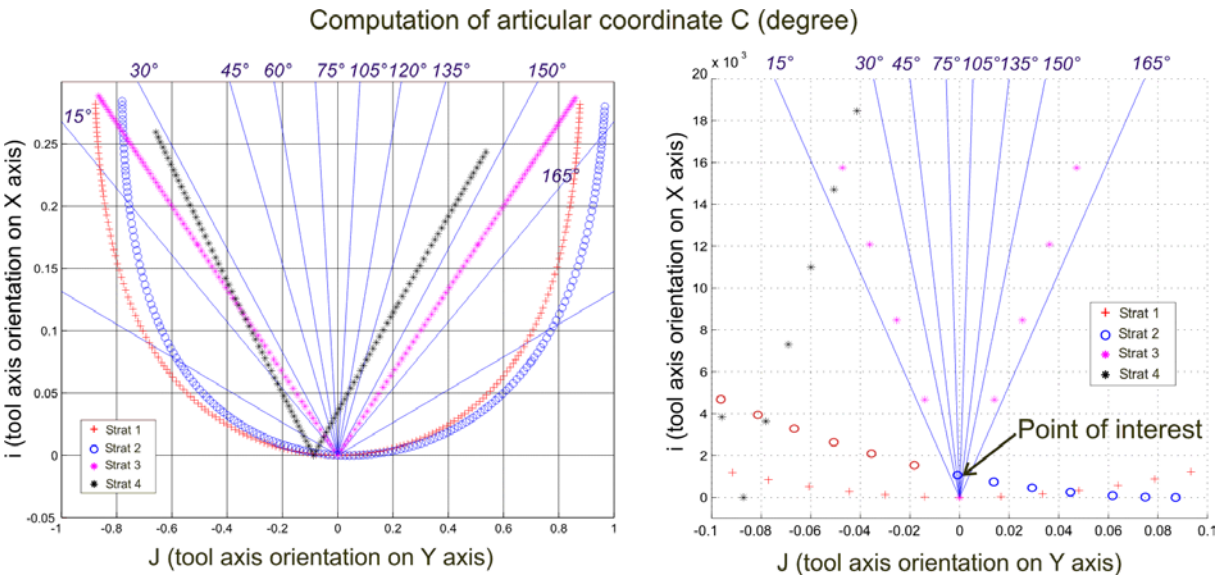

Figure 11: C axis values according to i and j

Nevertheless, if we can emphasize the amplitude of the incoherent movements, thanks to figure 11, the movement itself results once again from the existence of two IKT solutions. Indeed, the passage from *j* negative to *j* positive corresponds to the solution space swapping. That means that swapping from $A_1 = acos(k)$; $C_1 = -atan(i/j)$ to the solution $A_2 = -acos(k)$; $C_2 = -atan(i/j)$ involves a main discontinuity (figure 12). When the ratio *i/j* is a of a high negative value, C_1 is close to 90°, whereas when *i/j* is of a high positive value, C_2 is close to -90°. This generates a 180° discontinuity when passing through $j = 0$ when *i* is not null. Nevertheless, since linear movements of the tool are small

during finishing, generated kinematical errors are not significant, particularly when using a ball-end cutter tool.

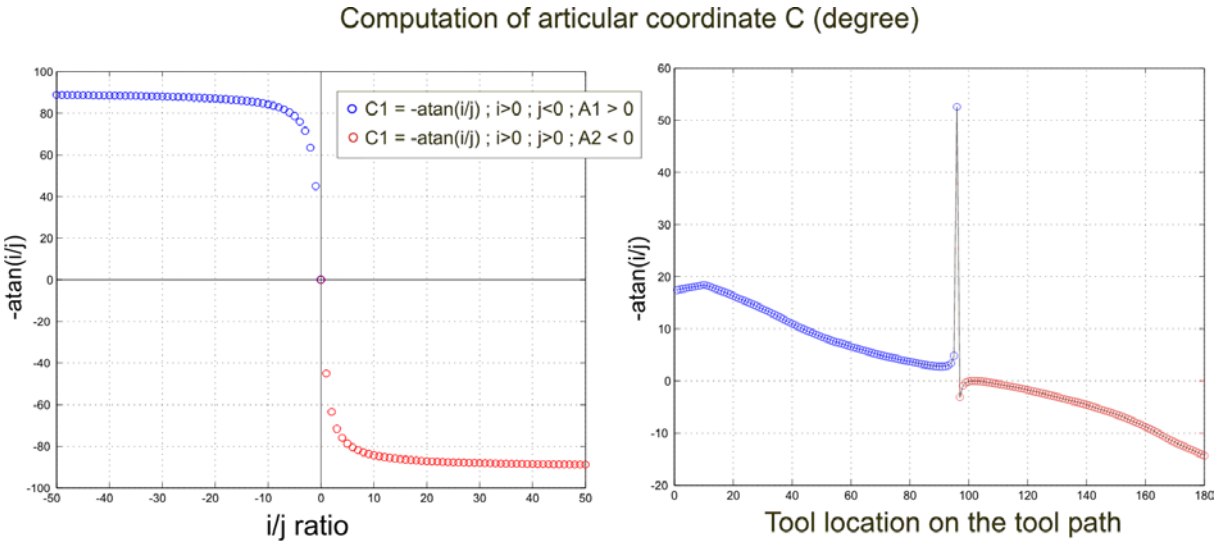

Figure 12: C axis values according to i/j ratio and to the space of solution

Although this phenomenon is not comparable with the problem of singularity cone, the resolution of the problem can be carried out with methods identical to those developed in [3], i.e. by deformation of the 3D trajectory or by modification of the 2D curve in the *ij* plane (figure13). Indeed, the only suppression of the "wrong" point in the program could generate a too significant chordal deviation. Moreover, a deformation-based method preserves continuity in the movement of the rotary axes. The deformation leads to the tool orientation modification by modifying the tilt and yaw angles to pass as closer as possible to the singularity point, as for strategy 1 (null tilt angle) which does not present this difficulty (figure 11). However, if this modification is influence-free on surface roughness when using a ball-end cutter tool, it is not the case with a filleted-end tool [7]. In such a case, the solution cannot come from the post processing of the trajectory considering that to preserve the specified scallop height (thus the required quality), it is necessary to modify the angles of the tool axis orientation in the local reference frame (C_C, $\boldsymbol{f}$, $\boldsymbol{n}$, $\boldsymbol{t}$) relatively to the tangent plane to the surface at the considered C_C point.

In order to maintain the behavior of *A* axis during the tool path modification (*A=acos(k)*), we could impose a deformation in the *ij* plane respecting the following constraint: $i^2 + j^2 = 1 - k^2$. Hence, the modified point on the *ij* plane must be part of a $sqrt(1 - k^2)$ radius circle centered on the origin (Figure 13). We applied this deformation on a set of cutter location points at the neighborhood of the incoherent movement and computed the resulting direct axis command *C* (Figure 13). The transition between IKT solutions is smoother. The NC unit is able to interpolate theses new direct axis commands without difficulty, removing the incoherent movement. However, we point out that the new program communicated to the NC unit in term of *(i, j, k)* could generate a more localized incoherent movement due to the tool path interpolation through the change of IKT solution.

To summarize, strategies which not lead to incoherent movements of the rotary axes are of great interest (as strategy 4 for instance). Anyway, due to the complexity of the inverse kinematical transformation, it remains difficult to anticipate the machine tool kinematical behavior during tool path programming. The choice of the programming strategy is still an iterative procedure dedicated to a given machine tool.

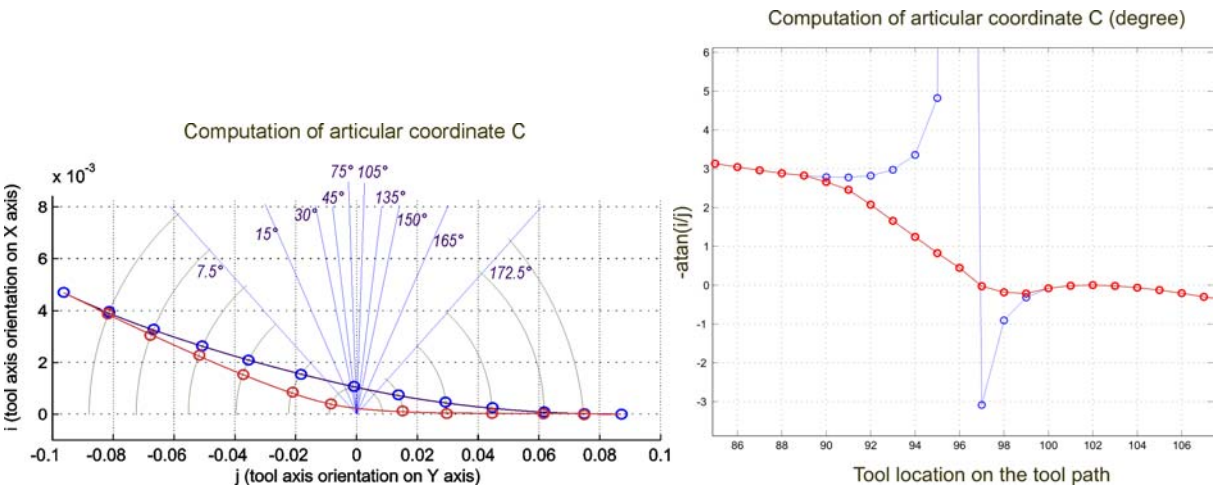

Figure 13: tool path modification in (i,j) plane

5 Conclusions

The production modification from 3-axis machining at conventional cutting speeds to 5-axis high speed machining on the fixed guide vanes presented some difficulties. These difficulties come mainly from the structure of the used machines, the limitations of the axes range and the kinematical performances of the rotary axes, always slowest on this type of machine. The limits of the rotary axes range generates jumps between IKT solutions, which create collisions if the CAM software is not able to propose additional retract movements to safety planes. We used machining strategies with tool axis orientation optimization in order to maximize the tool feedrate while minimizing rotary axes prompting. On the other hand, the machining of the leading edge in configurations where we are close to the singularity does not allow obtaining the awaited profits because of disturbed movements of the part. It is thus necessary to detect these behaviors during simulations of machining in order to modify the trajectory. We proposed an analysis of the tool path in the *(i,j)* plane and a method to modify the orientation of the tool to remove or soften the incoherent movements. In the case of the ball end mill, a modification can be carried out directly in the program trough a post-processing of the tool path. As drawback, the numerical chain is broken, as we cannot keep track of this modification. The most satisfactory solution is to modify the CAD model by modifying the machining strategy, but we are then confronted to the lack of integrate tools into commercial CAM software to carry out this operation easily. Finally, the tests carried out on the two milling center allow to confirm the choice of 5-axis high speed machining to produce copper blades. This will help to reduce the polishing phase of the leading edges.

6 References

[1] HYDRODYNA 2003, Eureka Project N° 1625 http://lmhpc46.epfl.ch/hydrodyna.html

[2] E. BOHEZ, S.S. MAKHANOV, K. SONTHIPERMPOON, "Adaptive nonlinear tool path optimization for five-axis machining", International Journal of Production Research, vol. 38 (17), p. 4329-4343, 2000.

[3] A. AFFOUARD, E. DUC, C. LARTIGUE, J-M. LANGERON, P. BOURDET, "Avoiding 5-axis singularities using tool path deformation", International Journal of Machine Tools & Manufacture, 44(4), p. 415-425, 2004.

[4] A. BRIENT, "Etude de l'influence du processus de fabrication sur les performances des propulseurs marins : approche multimétiers de l'usinage d'hélices" Thèse de doctorat de l'Ecole Centrale de Nantes, 2004.

[5] C.M. LEE, S.W. KIM, Y.H. LEE, D.W. LEE "The optimal cutter orientation in ball end milling of cantilever-shaped thin plate" Journal of Materials Processing Technology, vol. 153-154, p. 900-906, 2004.

[6] N.CORDUAN, F. LAPUJOULADE, J-P COSTES, " Investigation on thin walled piece stability during milling operations", 4th International conference on Integrated Design and Production, Casablanca, Morocco Nov. 2005.

[7] B.K. CHOI, J.W. PARK, C.S. JUN, "Cutter location data optimization in 5-axis surface machining", Computer-Aided Design, vol. 25, no. 6, p. 377-386, 1993.

[8] C. TOURNIER, E. DUC, "Iso-scallop tool path generation in 5-axis milling", International Journal of Advanced Manufacturing Technology, vol. 25 (9-10), p. 867-875, 2005.

[9] Y.S. LEE, "Admissible tool orientation control of gouging avoidance for 5-axis complex surface machining", Computer-Aided Design, vol. 29, no. 7, p. 507-521, 1997.

[10] M-C HO, Y-R HWANG, C-H HU, "Five-axis tool orientation smoothing using quaternion interpolation algorithm", International Journal of Machine Tools & Manufacture, vol. 43, p. 1259-1267, 2003.

[11] M. MUNLIN, S.S. MAKHANOV, E.L.J. BOHEZ, "Optimization of a 5-axis milling machine near stationary points", Computer-Aided Design, vol. 36, p.1117-1128, 2004.

7 Appendix

Strategy 1: extract from ISO program

```
N2900 G1 X-28.39162 Y-0.59334 Z59.98989 A1.953 C0.271
N2910 G1 X-28.39223 Y-0.29671 Z59.99747 A0.976 C0.134
N2920 G1 X-28.39244 Y0.00000 Z60.00000 A0 C0.134
N2930 G1 X-28.39229 Y0.25214 Z59.99817 A-0.83 C-0.115
N2940 G1 X-28.39179 Y0.52714 Z59.99202 A-1.734 C-0.24
```

Strategy 1 : extract from APTSource program

```
GOTO  /  -28.39162,   -0.59334,   59.98989, 0.000161,-0.034071, 0.999419
GOTO  /  -28.39223,   -0.29671,   59.99747, 0.000040,-0.017043, 0.999855
GOTO  /  -28.39244,    0.00000,   60.00000, 0.000000, 0.000000, 1.000000
GOTO  /  -28.39229,    0.25214,   59.99817, 0.000029, 0.014484, 0.999895
GOTO  /  -28.39179,    0.52714,   59.99202, 0.000127, 0.030272, 0.999542
```

Strategy 2 : extract from ISO program

```
N2910 G1 X-28.38197 Y-2.14469 Z59.86773 A2.042 C3.358
N2920 G1 X-28.38474 Y-1.84041 Z59.90263 A1.047 C4.822
N2930 G1 X-28.38709 Y-1.53565 Z59.93222 A0.081 C52.595
N2940 G1 X-28.38873 Y-1.28023 Z59.95290 A-0.79 C-3.086
N2950 G1 X-28.39015 Y-1.01049 Z59.97066 A-1.676 C-0.905
```

Strategy 2 : extract from APTSource program

```
GOTO  /  -28.38197,   -2.14469,   59.86773, 0.002087,-0.035573, 0.999365
GOTO  /  -28.38474,   -1.84041,   59.90263, 0.001538,-0.018231, 0.999833
GOTO  /  -28.38709,   -1.53565,   59.93222, 0.001071,-0.000819, 0.999999
GOTO  /  -28.38873,   -1.28023,   59.95290, 0.000744, 0.013799, 0.999905
GOTO  /  -28.39015,   -1.01049,   59.97066, 0.000462, 0.029251, 0.999572
```

Strategy 3 : extract from ISO program

```
N2450 G1 X-28.38438 Y-1.87481 Z59.89895 A1.537 C378.436
N2460 G1 X-28.38993 Y-1.04297 Z59.96875 A0.846 C378.435
N2470 G1 X-28.39244 Y0.00000 Z60.00000 A0 C378.435
N2480 G1 X-28.38990 Y1.05008 Z59.96832 A-0.846 C341.565
N2490 G1 X-28.38432 Y1.88127 Z59.89825 A-1.537 C341.564
```

Strategy 3 : extract from APTSource program

```
GOTO  /  -28.38438,   -1.87481,   59.89895, 0.008487,-0.025460, 0.999640
GOTO  /  -28.38993,   -1.04297,   59.96875, 0.004678,-0.014034, 0.999891
GOTO  /  -28.39244,    0.00000,   60.00000, 0.000000, 0.000000, 1.000000
GOTO  /  -28.38990,    1.05008,   59.96832, 0.004678, 0.014034, 0.999891
GOTO  /  -28.38432,    1.88127,   59.89825, 0.008487, 0.025460, 0.999640
```

Strategy 4 : extract from ISO program

```
N1900 G1 X-28.27810 Y7.19798 Z58.49283 A1.857 C67.279
N1910 G1 X-28.25241 Y8.00046 Z58.13274 A1.94 C85.124
N1920 G1 X-28.22491 Y8.79216 Z57.73803 A2.189 C100.282
N1930 G1 X-28.19583 Y9.57289 Z57.30986 A2.559 C111.784
N1940 G1 X-28.16684 Y10.30691 Z56.87154 A3.008 C120.179
```

Strategy 4 : extract from APTSource program

```
GOTO  /  -28.27810,    7.19798,   58.49283, 0.029882,-0.012513, 0.999475
GOTO  /  -28.25241,    8.00046,   58.13274, 0.033723,-0.002877, 0.999427
GOTO  /  -28.22491,    8.79216,   57.73803, 0.037584, 0.006818, 0.999270
GOTO  /  -28.19583,    9.57289,   57.30986, 0.041463, 0.016571, 0.999003
GOTO  /  -28.16684,   10.30691,   56.87154, 0.045361, 0.026379, 0.998622
```