HAL
open science

Compact Visibility Representation of Plane Graphs

Jiun-Jie Wang, Xin He

To cite this version:

Jiun-Jie Wang, Xin He. Compact Visibility Representation of Plane Graphs. Symposium on Theoretical Aspects of Computer Science (STACS2011), Mar 2011, Dortmund, Germany. pp.141-152. hal-00573611

HAL Id: hal-00573611

https://hal.science/hal-00573611v1

Submitted on 5 Mar 2011

HAL is a multi-disciplinary open access archive for the deposit and dissemination of scientific research documents, whether they are published or not. The documents may come from teaching and research institutions in France or abroad, or from public or private research centers.

L'archive ouverte pluridisciplinaire **HAL**, est destinée au dépôt et à la diffusion de documents scientifiques de niveau recherche, publiés ou non, émanant des établissements d'enseignement et de recherche français ou étrangers, des laboratoires publics ou privés.

Compact Visibility Representation of Plane Graphs*

Jiun-Jie Wang[1] and Xin He[2]

1 **Department of Comp. Sci. and Eng., Univ. at Buffalo, Buffalo, NY 14260-2000 USA.** `jiunjiew@buffalo.edu`
2 **Department of Comp. Sci. and Eng., Univ. at Buffalo, Buffalo, NY 14260-2000 USA.** `xinhe@buffalo.edu`

Abstract

The visibility representation (VR for short) is a classical representation of plane graphs. It has various applications and has been extensively studied. A main focus of the study is to minimize the size of the VR. It is known that there exists a plane graph G with n vertices where any VR of G requires a grid of size at least $\frac{2}{3}n \times (\frac{4}{3}n - 3)$ (width $\times$ height). For upper bounds, it is known that every plane graph has a VR with grid size at most $\frac{2}{3}n \times (2n - 5)$, and a VR with grid size at most $(n-1) \times \frac{4}{3}n$. It has been an open problem to find a VR with both height and width simultaneously bounded away from the trivial upper bounds (namely with size at most $c_h n \times c_w n$ with $c_h < 1$ and $c_w < 2$).

In this paper, we provide the first VR construction with this property. We prove that every plane graph of n vertices has a VR with height $\leq \max\{\frac{23}{24}n + 2\lceil\sqrt{n}\rceil + 4, \frac{11}{12}n + 13\}$ and width $\leq \frac{23}{12}n$. The area (height$\times$width) of our VR is larger than the area of some of previous results. However, bounding one dimension of the VR only requires finding a good st-orientation *or* a good dual s^*t^*-orientation of G. On the other hand, to bound both dimensions of VR simultaneously, one must find a good st-orientation *and* a good dual s^*t^*-orientation at the same time, and thus is far more challenging. Since st-orientation is a very useful concept in other applications, this result may be of independent interests.

1998 ACM Subject Classification G.2.2 Graph algorithms.

Keywords and phrases plane graph, plane triangulation, visibility representation, st-orientation

Digital Object Identifier 10.4230/LIPIcs.STACS.2011.141

1 Introduction

Drawing plane graphs has emerged as a fast growing research area in recent years (see [1] for a survey). A *visibility representation* (VR for short) is a classical drawing style of plane graphs, where the vertices of a graph G are represented by non-overlapping horizontal line segments (called *vertex segment*), and each edge of G is represented by a vertical line segment touching the vertex segments of its end vertices. Fig. 1 shows a VR of a plane graph G. The problem of computing a compact VR is important not only in algorithmic graph theory, but also in practical applications. A simple linear time VR algorithm was given in [13, 14] for 2-connected plane graphs. It uses an *st-orientation* of G and the corresponding st-orientation of its st-dual G^* to construct a VR. Using this approach, the height of the VR is bounded by $(n-1)$ and the width of the VR is bounded by $(2n-5)$ [13, 14].

* Research supported in part by NSF Grant CCR-0635104.

© Jiun-Jie Wang and Xin He;
licensed under Creative Commons License NC-ND
28th Symposium on Theoretical Aspects of Computer Science (STACS'11).
Editors: Thomas Schwentick, Christoph Dürr; pp. 141–152
Leibniz International Proceedings in Informatics
LIPICS Schloss Dagstuhl – Leibniz-Zentrum für Informatik, Dagstuhl Publishing, Germany
SYMPOSIUM ON THEORETICAL ASPECTS OF COMPUTER SCIENCE

	Plane Graph		4-Connected Plane Graph	
	Width	Height	Width	Height
1	$\leq (2n-5)$ [13, 14]	$\leq (n-1)$ [13, 14]		
2	$\leq \lfloor \frac{3n-6}{2} \rfloor$ [6]			
3	$\leq \lfloor \frac{22n-42}{15} \rfloor$ [9]		$\leq (n-1)$ [7]	
4		$\leq \lfloor \frac{5n}{6} \rfloor$ [16]		
5	$\leq \lfloor \frac{13n-24}{9} \rfloor$ [17]			$\leq \lceil \frac{3n}{4} \rceil$ [15]
6		$\leq \lfloor \frac{4n-1}{5} \rfloor$ [18]		
7		$\leq \frac{2n}{3} + \lfloor 2\sqrt{n} \rfloor$ [4]		
8		$\leq \frac{2n}{3} + 14$ [19]		
9	$\leq \lfloor \frac{4n}{3} \rfloor - 2$ [3]			$\leq \lceil \frac{n}{2} \rceil + 2\lceil \sqrt{\frac{n-2}{2}} \rceil$ [2]
10			$\leq \frac{3}{2}n$ [5]	$\leq \frac{3}{4}n + 2\lceil \sqrt{n} \rceil + 4$ [5]
11	$\leq \frac{23}{12}n$	$\leq \max\{\frac{23}{24}n + 2\lceil \sqrt{n} \rceil + 4, \frac{11}{12}n + 13\}$		

Table 1 Previous and new results on the height and the width of VR. (For the line 8, the original bound given in [19] was Height $\leq 2n/3 + O(1)$. By a more careful calculation, the term $O(1)$ is actually 14.)

As in many other graph drawing problems, one of the main concerns in the VR research is to minimize the grid size (i.e. the height and the width) of the representation. For the lower bounds, it was shown in [16] that there exists a plane graph G with n vertices where any VR of G requires a grid of size at least $(\lfloor \frac{2n}{3} \rfloor) \times (\lfloor \frac{4n}{3} \rfloor - 3)$. Some work has been done to reduce the height and width of the VR by carefully constructing special st-orientations. Table 1 compares related previous results and new result in this paper.

The line 1 in Table 1 gives the trivial upper bounds. All other results, except the line 10 and 11 (the recult in this paper), concentrated on one dimension of the VR (either the width or the height). In Table 1, the un-mentioned dimension is bounded by the trivial upper bound (namely, $n-1$ for the height and $2n-5$ for the width). In [11, 12], heuristic algorithms were developed aiming at reducing the height and the width of VRs simultaneously. The line 10 in Table 1 is the only VR construction with simultaneously reduced height and width. However, it only works for 4-connected plane graphs. The line 11 shows the new result in this paper: we prove that every plane graph with n vertices has a VR with height at most $\max\{\frac{23}{24}n + 2\lceil \sqrt{n} \rceil + 4, \frac{11}{12}n + 13\}$ and width at most $\frac{23}{12}n$. The representation can be constructed in linear time.

The present paper is organized as follows. Section 2 introduces preliminaries. Section 3 presents a decomposition lemma for plane graphs. Section 4 presents the construction of VR with the stated height and width. Section 5 concludes the paper.

2 Preliminaries

In this paper, we only consider simple graphs (namely without self-loops and multiple edges). A *planar graph* is a graph $G = (V, E)$ such that the vertices of G can be drawn in the plane and the edges of G can be drawn as non-intersecting curves. Such a drawing is called an *embedding*. The embedding divides the plane into a number of connected regions. Each region is called a *face*. The unbounded face is the *exterior face*. The other faces are *interior faces*. The vertices and edges that are not on the boundary of the exterior face are called interior

vertices and edges, respectively. A *plane graph* is a planar graph with a fixed embedding. A *plane triangulation* is a plane graph where every face is a triangle (including the exterior face). $|G|$ denotes the number of vertices of G. $I(G)$ denotes the set of interior vertices of G. Thus $|I(G)| = |G| - 3$ for a plane triangulation G.

For a path P, length(P) (or $|P|$) denotes the number of edges in P. For two vertices a, b in P, $P(a, b)$ denotes the sub-path of P from a to b (inclusive). (We slightly abuse the notation here: For a graph G, $|G|$ denotes the number of vertices in G. For a path P, $|P|$ denotes the number of edges in P.)

When discussing VRs, we assume the input graph G is a plane triangulation. (If not, we get a triangulation G' by adding dummy edges into G. After constructing a VR for G', we can get a VR of G by deleting the vertical line segments for the dummy edges). From now on, G always denotes a plane triangulation.

A *numbering* $\mathcal{O}$ of a set $S = \{a_1, \ldots, a_k\}$ is a one-to-one mapping between S and the set $\{1, 2, \ldots, k\}$. We write $\mathcal{O} = \langle a_{i_1}, a_{i_2}, \ldots, a_{i_k} \rangle$ to indicate $\mathcal{O}(a_{i_1}) = 1$, $\mathcal{O}(a_{i_2}) = 2$ ... etc. A set S with a numbering written this way is called an *ordered list*. For two elements a_i and a_j, if a_i is assigned a smaller number than a_j in $\mathcal{O}$, we write $a_i \prec_{\mathcal{O}} a_j$. Let S_1 and S_2 be two disjoint sets. If $\mathcal{O}_1$ is a numbering of S_1 and $\mathcal{O}_2$ is a numbering of S_2, their concatenation, written as $\mathcal{O} = \langle \mathcal{O}_1, \mathcal{O}_2 \rangle$, is the numbering of $S_1 \cup S_2$ where $\mathcal{O}(x) = \mathcal{O}_1(x)$ for all $x \in S_1$ and $\mathcal{O}(y) = \mathcal{O}_2(y) + |S_1|$ for all $y \in S_2$.

G is called an *directed graph* (digraph) if each edge of G is assigned a direction. An *orientation* of a (undirected) graph G is a digraph obtained from G by assigning a direction to each edge of G. We use G to denote both the resulting digraph and the underlying undirected graph unless otherwise specified. (Its meaning will be clear from the context.)

Let $G = (V, E)$ be an undirected graph. A numbering $\mathcal{O}$ of V induces an orientation of G as follows: each edge of G is directed from its lower numbered end vertex to its higher numbered end vertex. The resulting digraph, denoted by $G_{\mathcal{O}}$, is called the *orientation derived from* $\mathcal{O}$ which, obviously, is an acyclic digraph. We use $\text{length}_G(\mathcal{O})$ (or simply length$(\mathcal{O})$ if G is clear from the context) to denote the length of the longest directed path in $G_{\mathcal{O}}$.

For a 2-connected plane graph G and an exterior edge (s, t), an orientation of G is called an *st-orientation* if the resulting digraph is acyclic with s as the only source and t as the only sink. Such a digraph is also called an *st-graph*. Lempel et al. [8] showed that for every 2-connected plane graph G and an exterior edge (s, t), there exists an st-orientation. For more properties of st-orientation and st-graph, we refer readers to [10].

Let G be a 2-connected plane graph and (s, t) an exterior edge. An *st-numbering* of G is a one-to-one mapping $\xi : V \to \{1, 2, \ldots, n\}$, such that $\xi(s) = 1$, $\xi(t) = n$, and each vertex $v \neq s, t$ has two neighbors u, w with $\xi(u) < \xi(v) < \xi(w)$, where u (w, resp.) is called a *smaller neighbor* (*bigger neighbor*, resp.) of v. Given an st-numbering ξ of G, the orientation of G derived from ξ is obviously an st-orientation of G. On the other hand, if $G = (V, E)$ has an st-orientation $\mathcal{O}$, we can define an one-to-one mapping $\xi : V \to \{1, \ldots, n\}$ by topological sort. It is easy to see that ξ is an st-numbering and the orientation derived from ξ is $\mathcal{O}$. From now on, we will interchangeably use the term "an st-numbering" of G and the term "an st-orientation" of G, where each edge of G is directed accordingly.

▶ **Definition 1.** Let G be a plane graph with an st-orientation $\mathcal{O}$, where (s, t) is an exterior edge drawn at the left on the exterior face of G. The *st-dual* graph G^* of G and the dual orientation $\mathcal{O}^*$ of $\mathcal{O}$ is defined as follows:

- Each face f of G corresponds to a node f^* of G^*. In particular, the unique interior face adjacent to the edge (s, t) corresponds to a node s^* in G^*, the exterior face corresponds to a node t^* in G^*.

- For each edge $e \neq (s,t)$ of G separating a face f_1 on its left and a face f_2 on its right, there is a dual edge e^* in G^* from f_1^* to f_2^*.
- The dual edge of the exterior edge (s,t) is directed from s^* to t^*.

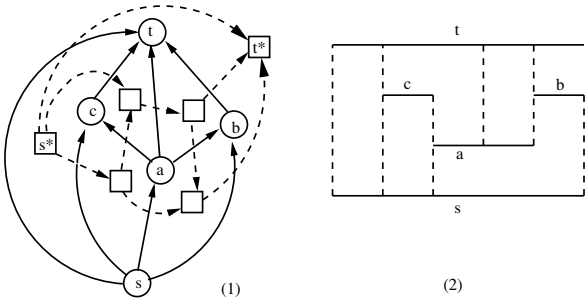

Figure 1 (1) An st-graph G and its st-dual graph G^*; (2) A VR of G.

Fig. 1 (1) shows an st-graph G and its st-dual graph G^*. (Circles and solid lines denote the vertices and the edges of G. Squares and dashed lines denote the nodes and the edges of G^*.) It is well known that the st-dual graph G^* defined above is an st-graph with source s^* and sink t^*. The correspondence between an st-orientation $\mathcal{O}$ of G and the dual st-orientation $\mathcal{O}^*$ is a one-to-one correspondence. The following theorem was given in [13, 14]:

▶ **Theorem 2.** *Let G be a 2-connected plane graph with an st-orientation $\mathcal{O}$. Let $\mathcal{O}^*$ be the dual st-orientation of the st-dual graph G^*. A VR of G can be obtained from $\mathcal{O}$ in linear time. The height of the VR is* $\text{length}(\mathcal{O})$. *The width of the VR is* $\text{length}(\mathcal{O}^*)$. *Since G has n vertices and G^* has $2n-4$ nodes, any st-orientation of G leads to a VR with height $\leq n-1$ and width $\leq 2n-5$.*

Fig. 1 (2) shows a VR of the graph G shown in Fig. 1 (1). The width of the VR is $\text{length}(\mathcal{O}^*) = 5$. The height of the VR is $\text{length}(\mathcal{O}) = 3$.

The following theorems were given in [19, 3, 5], and will be needed later for our VR construction.

▶ **Theorem 3.** *[19] Every plane triangulation with n vertices has a VR with width $\leq 2n-5$ and height $\leq \frac{2}{3}n + 14$, which can be constructed in linear time.*

▶ **Theorem 4.** *[3] Every plane triangulation with n vertices has a VR with height $\leq n-1$ and width $\leq \lfloor \frac{4}{3}n \rfloor - 2$, which can be constructed in linear time.*

▶ **Theorem 5.** *[5] Every 4-connected plane triangulation with n vertices has a VR with height $\leq \frac{3}{4}n + 2\lceil\sqrt{n}\rceil + 4$ and width $\leq \frac{3}{2}n$, which can be constructed in linear time.*

From Theorem 2, results in above theorems can also be stated in terms of the length of the orientations of G. The statement "G has an st-orientation $\mathcal{O}$ such that $\text{length}(\mathcal{O}) \leq x$ and $\text{length}(\mathcal{O}^*) \leq y$" is equivalent to the statement "the VR of G derived from $\mathcal{O}$ has height $\leq x$ and width $\leq y$". We will use these two statements interchangeably.

3 A Decomposition Lemma

The basic idea of our VR construction is as follows: We use the VR constructions in Theorems 2, 3, 4 and 5 for different subgraphs of G, some of them have small width and others have small height. The crux of the construction is to find a proper balance that reduces overall

height and width of the VR. In this section, we prove a decomposition lemma that is needed by our VR construction to achieve the balance.

Let $G = (V, E)$ be a plane graph. A *triangle* of G is a set of three mutually adjacent vertices. The notation $\triangle = (a, b, c)$ denotes a triangle consisting of vertices a, b, c. A triangle $\triangle$ divides the plane into its interior and exterior regions. We say $\triangle = (a, b, c)$ is a *separating triangle* if $G - \{a, b, c\}$ is disconnected. In other words, $\triangle = (a, b, c)$ is a separating triangle if there are vertices in both its interior and exterior regions. The following fact by Whitney is well known:

▶ **Fact 1.** A plane triangulation G is 4-connected if and only if G has no separating triangles.

Let $\triangle = (a, b, c)$ be a separating triangle. $G_\triangle$ denotes the subgraph of G induced by $\{a, b, c\} \cup \{v \in V \mid v \text{ is in interior of } \triangle\}$. $\triangle$ is *maximal* if there is no other separating triangle $\triangle'$ such $G_\triangle \subset G_{\triangle'}$. Two triangles $\triangle_1$ and $\triangle_2$ are *related* if either $G_{\triangle_1} \subseteq G_{\triangle_2}$ or $G_{\triangle_2} \subseteq G_{\triangle_1}$.

Let G_1 and G_2 be two plane triangulations. If G_1 has an internal face f such that the vertex set of f and the vertex set of the outer face of G_2 are identical, we can *embed* G_2 *into* G_1 by identifying the face f and the exterior face of G_2. The resulting plane triangulation is denoted by $G_1 \oplus_f G_2$ (or simply $G_1 \oplus G_2$).

▶ **Definition 6.** Let G_1 and G_2 be two plane triangulations such that G_2 can be embedded into G_1 by a common face $f = \{a, b, c\}$. Let $\mathcal{O}_1$ be an st-orientation of G_1 and $\mathcal{O}_2$ be an st-orientation of G_2 such that the three edges $\{(a, b), (b, c), (c, a)\}$ are oriented the same way in $\mathcal{O}_1$ and $\mathcal{O}_2$. $\mathcal{O}_{G_1} \oplus \mathcal{O}_{G_2}$ denotes the union of $\mathcal{O}_1$ and $\mathcal{O}_2$, which is an orientation of $G_1 \oplus G_2$.

▶ **Lemma 7.** *Let G_1, G_2, $\mathcal{O}_1$, and $\mathcal{O}_2$ be as in Definition 6. Then $\mathcal{O}_{G_1} \oplus \mathcal{O}_{G_2}$ is an st-orientation of $G_1 \oplus G_2$.*

Proof. Immediate from the definition. ◀

▶ **Definition 8.** The *4-block tree* of a plane triangulation G is a rooted tree T defined as follows:

- If G has no separating triangles (i.e. G is 4-connected), then T consists of a single root r.
- If not, let $\triangle_1, \ldots, \triangle_p$ be the maximal separating triangles of G. Let T_i be the 4-block tree of $G_{\triangle_i}$. Then T is the tree with root r and the roots of T_i $(1 \le i \le p)$ as the children of r.

From the definition, we have the following properties:

- Each non-root node u of T corresponds to a separating triangle $\triangle_u$ of G.
- For any $u, v \in T$, u and v have ancestor-descendant relation if and only if $\triangle_u$ and $\triangle_v$ are related in G.

For a node u of T, G_u denotes the subgraph $G_{\triangle_u} - (\cup_{v \in C(u)} I(G_{\triangle_v}))$ where $C(u)$ is the set of children of u in T. In other words, G_u is obtained from $G_{\triangle_u}$ by deleting all vertices that are in the interior of the maximal separating triangles of $G_{\triangle_u}$. Since G_u has no separating triangles, G_u is 4-connected. Each G_u is called a *4-block component* of G. Fig. 2 shows a plane triangulation G, the 4-block components and the 4-block tree of G.

For a node $u \in T$, define $|T_u| = |G_{\triangle_u}|$.

▶ **Lemma 9.** *Let G be a triangulation and T be its 4-block tree. At least one of the following two conditions holds.*

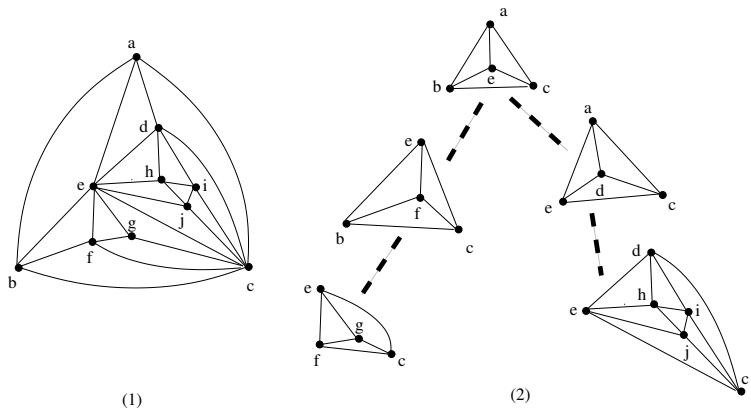

Figure 2 (1) A triangulation G; (2) 4-block components and the 4-block tree T of G.

1. *There exists a node v in T such that $|G_v| \geq \frac{n}{6}$.*
2. *There exists a set of unrelated separating triangles $\{\triangle_1, \triangle_2, \ldots, \triangle_h\}$, such that $|G_{\triangle_i}| \geq 5$ and $\frac{n}{4} - 3 \leq \sum_{i=1}^{h} |I(G_{\triangle_i})| \leq \frac{3}{4}n - 3$.*

Proof. Let r be the root of T. Let H be a maximal path in T from r to some node v of T such that for each node $u \in H$, $|T_u| \geq \frac{3n}{4}$ (v can be the root r).

If v is a leaf of T, then $|G_v| \geq \frac{3n}{4} > \frac{n}{6}$. So condition (1) is satisfied.

Now, suppose v is not a leaf. Let $\{v_1, v_2, \ldots, v_p\}$ be the children of v in T. Without loss of generality, assume $|T_{v_1}| \leq |T_{v_2}| \leq \ldots \leq |T_{v_p}|$. Then, either $\frac{n}{4} \leq |T_{v_p}| < \frac{3n}{4}$; or $|T_{v_i}| < \frac{n}{4}$ for all $v_i \in \{v_1, v_2, \ldots, v_p\}$.

If $\frac{n}{4} \leq |T_{v_p}| < \frac{3n}{4}$, then the separating triangle $\triangle_{v_p}$ satisfies $\frac{n}{4} - 3 \leq |I(G_{\triangle_{v_p}})| \leq \frac{3n}{4} - 3$. So the single separating triangle $\triangle_{v_p}$ satisfies condition (2).

Now suppose $|T_{v_i}| < \frac{n}{4}$ for all v_i. Let i_m be the index such that $|T_{v_i}| \leq 4$ for all $i \leq i_m$ and $|T_{v_i}| \geq 5$ for all $i > i_m$. There are three cases.

(1) $\sum_{i>i_m}(|T_{v_i}| - 3) < \frac{n}{4} - 3$.

Let $n_1 = |G_v|$. Since G_v is a triangulation with n_1 vertices, G_v has $2n_1 - 5$ internal faces by Euler's formula. Each child v_i of v corresponds to a maximal separating triangle of $G_{\triangle_v}$, and each such separating triangle is one of the interior faces of G_v. Thus, $i_m \leq p \leq 2n_1 - 5$. Since $|I(G_{\triangle_{v_i}})| = 1$ for all $i \leq i_m$, we have:

$$\begin{aligned} \frac{3}{4}n &\leq |T_v| = n_1 + \sum_{i \leq i_m} |I(G_{\triangle_{v_i}})| + \sum_{i > i_m} |I(G_{\triangle_{v_i}})| \\ &= n_1 + i_m + \sum_{i > i_m} |I(G_{\triangle_{v_i}})| \leq n_1 + (2n_1 - 5) + \sum_{i > i_m} |I(G_{\triangle_{v_i}})| \end{aligned}$$

From the assumption $\sum_{i>i_m} |I(G_{\triangle_{v_i}})| < \frac{n}{4} - 3$, we have: $3n_1 - 5 > \frac{3}{4}n - \frac{n}{4} = \frac{n}{2}$. This implies $|G_v| = n_1 \geq \frac{n}{6} + \frac{5}{3}$. So G_v satisfies (1).

(2) $\frac{n}{4} - 3 \leq \sum_{i>i_m}(|T_{v_i}| - 3) \leq \frac{3}{4}n - 3$.

This is equivalent to $\frac{n}{4} - 3 \leq \sum_{i>i_m} |I(G_{\triangle_{v_i}})| \leq \frac{3}{4}n - 3$. So the set of unrelated separating triangles $\{\triangle_{v_{i_m+1}}, \triangle_{v_{i_m+2}}, \ldots, \triangle_{v_{i_p}}\}$ satisfies (2).

(3) $\sum_{i>i_m}(|T_{v_i}| - 3) > \frac{3}{4}n - 3$

Let i_t be the first index such that $\sum_{i_m<i\le i_t}(|T_{v_i}|-3) \ge \frac{n}{4}-3$. Because each $|T_{v_i}| < \frac{n}{4}$, clearly $\sum_{i_m<i\le i_t}(|T_{v_i}|-3) \le \frac{3}{4}n-3$. So the set of unrelated separating triangles $\{\triangle_{v_{i_m+1}}, \triangle_{v_{i_m+2}}, \ldots, \triangle_{v_{i_t}}\}$ satisfies (2). ◀

4 Compact Visibility Representation

In this section. we describe our compact VR construction of a plane triangulation G. In order to reduce VR's height and width simultaneously, we construct a VR of G by using different VRs for some subgraphs of G. As stated in theorems 2, 3, 4 and 5, some of these VRs have small height and others have small width. Roughly speaking, we select a set of separating triangles, $\{\triangle_1, \triangle_2, \ldots, \triangle_h\}$ of G. For the subgraph of G that is outside of $\{G_{\triangle_1}, G_{\triangle_2}, \ldots, G_{\triangle_h}\}$ (call it G'), we use a VR of G' with small height. For each $G_{\triangle_i}$, we use a VR with small width. Then, we embed each $G_{\triangle_i}$ into G'.

Define $\mathcal{X}(k) = \lceil \frac{2}{3}k \rceil - 1$. It is easy to verify:

- $\mathcal{X}(k)$ is a non-decreasing function; and $\mathcal{X}(k) \ge 1$ and $\mathcal{X}(k) \ge k/3$ for all $k \ge 2$.

▶ **Theorem 10.** *Let $S = \{\triangle_1, \triangle_2, \ldots, \triangle_h\}$ be a set of unrelated separating triangles of G. Then G has an st-orientation $\mathcal{O}$ such that* $\text{length}(\mathcal{O}) \le \frac{2n}{3} + \frac{\sum_{i=1}^{h}|I(G_{\triangle_i})|}{3} + 14$ *and* $\text{length}(\mathcal{O}^*) \le 2n - 5 - \sum_{i=1}^{h}\mathcal{X}(|I(G_{\triangle_i})|)$.

Proof. Define $G_{ext} = G - \cup_{i=1}^{h} I(G_{\triangle_i})$ and $G_j = G_{ext} \cup (\cup_{i=1}^{j} G_{\triangle_i})$. We will show that G_j $(0 \le j \le h)$ has an st-orientation $\mathcal{O}_j$ so that:

▶ **Claim 1.** $\text{length}(\mathcal{O}_j) \le \frac{2}{3}|G_j| + \frac{\sum_{i=1}^{j}|I(G_{\triangle_i})|}{3} + 14$.

▶ **Claim 2.** $\text{length}(\mathcal{O}_j^*) \le 2|G_j| - 5 - \sum_{i=1}^{j}\mathcal{X}(|I(G_{\triangle_i})|)$.

Then the theorem follows. We prove claims 1 and 2 by induction.

Base case $j = 0$: From Theorem 3, $G_0 = G_{ext}$ has an st-orientation $\mathcal{O}_0$ such that $\text{length}(\mathcal{O}_0) \le \frac{2}{3}|G_0| + 14$ and $\text{length}(\mathcal{O}_0^*) \le 2|G_0| - 5$. So the claims hold for the base case.

Induction hypothesis: G_k has an st-orientation $\mathcal{O}_k$ such that: $\text{length}(\mathcal{O}_k) \le \frac{2}{3}|G_k| + \frac{\sum_{i=1}^{k}|I(G_{\triangle_i})|}{3} + 14$. and $\text{length}(\mathcal{O}_k^*) \le 2|G_k| - 5 - \sum_{i=1}^{k}\mathcal{X}(|I(G_{\triangle_i})|)$.

Suppose that $\triangle_{k+1} = \{a_{k+1}, b_{k+1}, c_{k+1}\}$. Without loss of generality, assume the edges of $\triangle_{k+1}$ are oriented in $\mathcal{O}_k$ as $\{(a_{k+1} \to b_{k+1}), (b_{k+1} \to c_{k+1}), (a_{k+1} \to c_{k+1})\}$.

By Theorem 4, $G_{\triangle_{k+1}}$ has an st-orientation $\mathcal{O}_{\triangle_{k+1}}$, with a_{k+1} as the source and c_{k+1} as the sink, such that: $\text{length}(\mathcal{O}_{\triangle_{k+1}}) \le |G_{\triangle_{k+1}}| - 1$ and $\text{length}(\mathcal{O}^*_{\triangle_{k+1}}) \le \lfloor \frac{4}{3}|G_{\triangle_{k+1}}| \rfloor - 2$.

Let $\mathcal{O}_{k+1} = \mathcal{O}_k \oplus \mathcal{O}_{\triangle_{k+1}}$. First we show $\text{length}(\mathcal{O}_{k+1}) \le \frac{2}{3}|G_{k+1}| + \frac{\sum_{i=1}^{k+1}|I(G_{\triangle_i})|}{3} + 14$.

Note that $|G_{k+1}| = |G_k| + |I(G_{\triangle_{k+1}})| = |G_k| + |G_{\triangle_{k+1}}| - 3$.

Let P_{k+1} be a longest path in $\mathcal{O}_{k+1}$ from s to t in G_{k+1}; P_k a longest path in $\mathcal{O}_k$ from s to t in G_k; and $P_{\triangle_{k+1}}$ a longest path in $\mathcal{O}_{\triangle_{k+1}}$ from a_{k+1} to c_{k+1}. There are several cases:

(i) P_{k+1} does not contain any interior edge in $G_{\triangle_{k+1}}$. Then P_{k+1} is a path in G_k. By induction hypothesis,

$$\text{length}(\mathcal{O}_{k+1}) = |P_{k+1}| \le \frac{2}{3}|G_k| + \frac{\sum_{i=1}^{k}|I(G_{\triangle_i})|}{3} + 14 \le \frac{2}{3}|G_{k+1}| + \frac{\sum_{i=1}^{k+1}|I(G_{\triangle_i})|}{3} + 14.$$

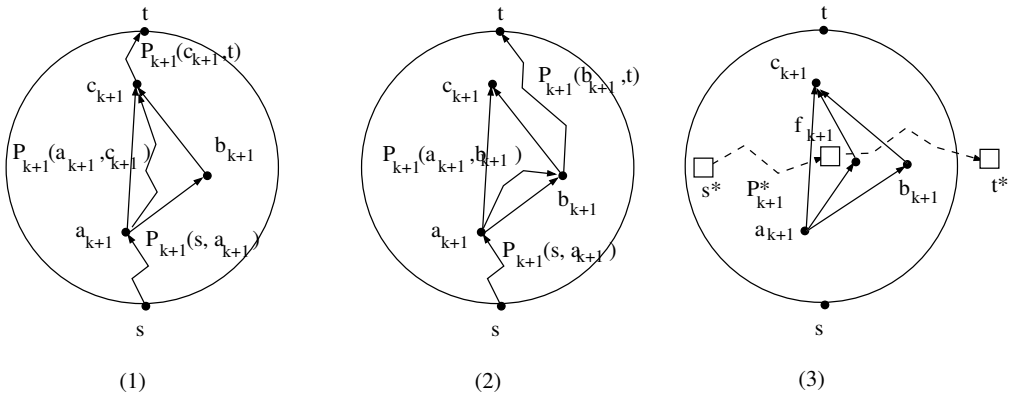

Figure 3 The proof of Theorem 10 (1) Case 2; (2) Case 3; (3) Path in the dual graph.

(ii) P_{k+1} passes through a path in $G_{\triangle_{k+1}}$ from a_{k+1} to c_{k+1} (see Fig. 3 (1)). P_{k+1} can be divided into 3 sub-paths: $\{P_{k+1}(s,a_{k+1}), P_{k+1}(a_{k+1},c_{k+1}), P_{k+1}(c_{k+1},t)\}$. Here $P_{k+1}(s,a_{k+1}), P_{k+1}(c_{k+1},t)$ are paths in G_k. $P_{k+1}(a_{k+1},c_{k+1})$ is a path in $G_{\triangle_{k+1}}$. Since $P_{\triangle_{k+1}}$ is a longest path in $G_{\triangle_{k+1}}$, we have: $|P_{k+1}(a_{k+1},c_{k+1})| \leq |P_{\triangle_{k+1}}|$.
Let P' be the concatenation of: $P_{k+1}(s,a_{k+1})$ followed by the edges $(a_{k+1} \to b_{k+1})$ and $(b_{k+1} \to c_{k+1})$; followed by $P_{k+1}(c_{k+1},t)$. Then P' is a path in G_k. Thus $|P'| = |P_{k+1}(s,a_{k+1})| + 2 + |P_{k+1}(c_{k+1},t)| \leq |P_k|$. This implies: $|P_{k+1}(s,a_{k+1})| + |P_{k+1}(c_{k+1},t)| \leq |P_k| - 2$. Hence:

$$\begin{aligned}
\text{length}(\mathcal{O}_{k+1}) &= |P_{k+1}| = |P_{k+1}(s,a_{k+1})| + |P_{k+1}(a_{k+1},c_{k+1})| + |P_{k+1}(c_{k+1},t)| \\
&\leq |P_k| - 2 + |P_{\triangle_{k+1}}| \leq \frac{2}{3}|G_k| + \frac{\sum_{i=1}^{k}|I(G_{\triangle_i})|}{3} + 14 + |G_{\triangle_{k+1}}| - 1 - 2 \\
&= \frac{2}{3}|G_k| + \frac{\sum_{i=1}^{k}|I(G_{\triangle_i})|}{3} + (|I(G_{\triangle_{k+1}})| + 3) + 14 - 3 \\
&= \frac{2}{3}(|G_k| + |I(G_{\triangle_{k+1}})| + 3) + \frac{\sum_{i=1}^{k+1}|I(G_{\triangle_i})| + 3}{3} + 14 - 3 \\
&= \frac{2}{3}|G_{k+1}| + \frac{\sum_{i=1}^{k+1}|I(G_{\triangle_i})|}{3} + 14
\end{aligned}$$

(iii) P_{k+1} passes through a path in $G_{\triangle_{k+1}}$ from a_{k+1} to b_{k+1} (see Fig. 3 (2)).
P_{k+1} can be divided into three sub-paths: $\{P_{k+1}(s,a_{k+1}), P_{k+1}(a_{k+1},b_{k+1}), P_{k+1}(b_{k+1},t)\}$. Here $P_{k+1}(s,a_{k+1}), P_{k+1}(b_{k+1},t)$ are paths in G_k, while $P_{k+1}(a_{k+1},b_{k+1})$ is a path in $G_{\triangle_{k+1}}$. The concatenation of $P_{k+1}(a_{k+1},b_{k+1})$ and the edge $b_{k+1} \to c_{k+1}$ is a path in $G_{\triangle_{k+1}}$. Hence: $|P_{k+1}(a_{k+1},b_{k+1})| + 1 \leq |P_{\triangle_{k+1}}|$. The concatenation of $P_{k+1}(s,a_{k+1})$ followed by the edge $a_{k+1} \to b_{k+1}$, followed by $P_{k+1}(b_{k+1},t)$ is a path in G_k. So: $|P_{k+1}(s,a_{k+1})| + 1 + |P_{k+1}(b_{k+1},t)| \leq |P_k|$. Hence:

$$\begin{aligned}
\text{length}(\mathcal{O}_{k+1}) &= |P_{k+1}| = |P_{k+1}(s,a_{k+1})| + |P_{k+1}(a_{k+1},b_{k+1})| + |P_{k+1}(b_{k+1},t)| \\
&\leq (|P_k| - 1) + (|P_{\triangle_{k+1}}| - 1) \\
&\leq \frac{2}{3}|G_k| + \frac{\sum_{i=1}^{k}|I(G_{\triangle_i})|}{3} + 14 + |G_{\triangle_{k+1}}| - 3 \\
&= \frac{2}{3}|G_{k+1}| + \frac{\sum_{i=1}^{k+1}|I(G_{\triangle_i})|}{3} + 14
\end{aligned}$$

(iv) P_{k+1} passes through a path in $G_{\triangle_{k+1}}$ from b_{k+1} to c_{k+1}. The proof is symmetric to Case 3.

Next we prove Claim 2. Let P_k^* be a longest path of $\mathcal{O}_k^*$ from s^* to t^*. From induction hypothesis, $|P_k^*| \leq 2|G_k| - 5 - \sum_{i=1}^{k} \mathcal{X}(|I(G_{\triangle_i})|)$. Let $P_{\triangle_{k+1}}^*$ be a longest path in $G_{\triangle_{k+1}}^*$. By Theorem 4, $|P_{\triangle_{k+1}}^*| \leq \lfloor \frac{4}{3}|G_{\triangle_{k+1}}| \rfloor - 2$.

Let P_{k+1}^* be a longest path of $\mathcal{O}_{k+1}^*$ from s^* to t^*. Let f_{k+1} be the face in G_{k+1} that is in the interior of $\triangle_{k+1}$ adjacent to the edge $a_{k+1} \to c_{k+1}$ (see Fig. 3 (3).) (In other words, f_{k+1} corresponds to the source node of dual st-orientation of $G_{\triangle_{k+1}}^*$.) If P_{k+1}^* uses any edge in $G_{\triangle_{k+1}}^*$, it must cross the edge $a_{k+1} \to c_{k+1}$ and enter the face f_{k+1}. There are two cases.

(a) P_{k+1}^* does not pass f_{k+1}. Then P_{k+1}^* is a path in G_k^* and the claim trivially holds.
(b) P_{k+1}^* passes through f_{k+1}.

$$\begin{aligned}
\text{length}(\mathcal{O}_{k+1}^*) &= |P_k^*| + |P_{\triangle_{k+1}}^*| - |\{f_{k+1}\}| \leq 2|G_k| - 5 \\
&\qquad - \sum_{i=1}^{k} \mathcal{X}(|I(G_{\triangle_i})|) + \lfloor \frac{4}{3}|G_{\triangle_{k+1}}| \rfloor - 2 - 1 \\
&= 2(|G_{k+1}| - |I(G_{\triangle_{k+1}})|) - 5 \\
&\qquad - \sum_{i=1}^{k} \mathcal{X}(|I(G_{\triangle_i})|) + \lfloor \frac{4}{3}(|I(G_{\triangle_{k+1}})| + 3) \rfloor - 3 \\
&= 2|G_{k+1}| - 5 - \sum_{i=1}^{k} \mathcal{X}(|I(G_{\triangle_i})|) - 2|I(G_{\triangle_{k+1}})| + \lfloor \frac{4}{3}|I(G_{\triangle_{k+1}})| \rfloor + 1 \\
&= 2|G_{k+1}| - 5 - \sum_{i=1}^{k} \mathcal{X}(|I(G_{\triangle_i})|) - (\lceil \frac{2}{3}|I(G_{\triangle_{k+1}}| \rceil - 1) \\
&= 2|G_{k+1}| - 5 - \sum_{i=1}^{k+1} \mathcal{X}(|I(G_{\triangle_i})|)
\end{aligned}$$

◀

▶ **Lemma 11.** *Let $S = \{\triangle_1, \triangle_2, \ldots, \triangle_h\}$ be a set of unrelated separating triangles of G such that $G' = G - (\cup_{i=1}^{h} I(G_{\triangle_i}))$ is a 4-connected graph. Then, G has an st-orientation $\mathcal{O}$ such that* $\text{length}(\mathcal{O}) \leq \frac{3}{4}n + \frac{\sum_{i=1}^{h} |I(G_{\triangle_i})|}{4} + 2\lceil \sqrt{|G'|} \rceil + 4$ *and* $\text{length}(\mathcal{O}^*) \leq \frac{3}{2}n + \frac{\sum_{i=1}^{h} |I(G_{\triangle_i})|}{2}$.

Proof. Define $G_j = G' \cup (\cup_{i=1}^{j} G_{\triangle_i})$. We show, by induction, that G_j has an st-orientation $\mathcal{O}_j$ such that

1. $\text{length}(\mathcal{O}_j) \leq \frac{3}{4}n + \frac{\sum_{i=1}^{j} |I(G_{\triangle_i})|}{4} + 2\lceil \sqrt{|G'|} \rceil + 4$
2. $\text{length}(\mathcal{O}_j^*) \leq \frac{3}{2}n + \frac{\sum_{i=1}^{j} |I(G_{\triangle_i})|}{2}$.

Base case $j = 0$: Since $G_0 = G'$ is 4-connected, by Theorem 5, G' has an st-orientation $\mathcal{O}'$ such that $\text{length}(\mathcal{O}') \leq \frac{3}{4}|G'| + 2\lceil \sqrt{|G'|} \rceil + 4$ and $\text{length}(\mathcal{O}'^*) \leq \frac{3}{2}|G'|$. The claims are trivially true.

Suppose the claims are true for $j = k$.

Suppose that $\triangle_{k+1} = \{a_{k+1}, b_{k+1}, c_{k+1}\}$. Without loss of generality, assume the edges of $\triangle_{k+1}$ are oriented in $\mathcal{O}_k$ as $\{(a_{k+1} \to b_{k+1}), (b_{k+1} \to c_{k+1}), (a_{k+1} \to c_{k+1})\}$.

By Theorem 2, $G_{\triangle_{k+1}}$ has an st-orientation $\mathcal{O}_{\triangle_{k+1}}$, with a_{k+1} as the source and c_{k+1} as the sink, such that $\text{length}(\mathcal{O}_{\triangle_{k+1}}) \leq |G_{\triangle_{k+1}}| - 1$ and $\text{length}(\mathcal{O}_{\triangle_{k+1}}^*) \leq 2|G_{\triangle_{k+1}}| - 5$.

We show the orientation $\mathcal{O}_{k+1} = \mathcal{O}_k \oplus \mathcal{O}_{\triangle_{k+1}}$ satisfies the claims.

The proof of Claim 1 is similar to the first part of the proof of Theorem 10. We only prove Claim 2.

By induction hypothesis, G_k has an st-orientation $\mathcal{O}_k$ such that $\text{length}(\mathcal{O}_k^*) \leq \frac{3}{2}|G_k| + \frac{\sum_{i=1}^{k}|I(G_{\triangle_i})|}{2}$. Also, we know that $\text{length}(\mathcal{O}^*_{\triangle_{k+1}}) \leq 2|G_{\triangle_{k+1}}|-5$. As in the proof of Theorem 10, there are two cases for analyzing $\text{length}(\mathcal{O}^*_{k+1})$.

(a) P^*_{k+1} does not pass f_{k+1}. Then P^*_{k+1} is a path in G^*_k and the claim trivially holds.
(b) P^*_{k+1} passes f_{k+1}. Then:

$$\begin{aligned}\text{length}(\mathcal{O}) &\leq \frac{3}{2}|G_k| + \frac{1}{2}\sum_{i=1}^{k}|I(G_{\triangle_i})| + 2|G_{\triangle_{k+1}}| - 5 - 1\\ &= \frac{3}{2}|G_k| + \frac{1}{2}\sum_{i=1}^{k}|I(G_{\triangle_i})| + 2|I(G_{\triangle_{k+1}})| \leq \frac{3}{2}|G_{k+1}| + \frac{1}{2}\sum_{i=1}^{k+1}|I(G_{\triangle_i})|\end{aligned}$$

This completes the induction. ◀

▶ **Theorem 12.** *Let G_v be a 4-block component of G, with the corresponding separating triangle $\triangle_v$ in G. Then G has an st-orientation $\mathcal{O}$ such that* $\text{length}(\mathcal{O}) \leq \frac{3}{4}n + \frac{1}{4}(n - |G_v|) + 2\lceil\sqrt{|G_v|}\rceil + 4$ *and* $\text{length}(\mathcal{O}^*) \leq \frac{3}{2}n + \frac{n-|G_v|}{2}$.

Proof. Let $S = \{\triangle_1, \triangle_2, \ldots, \triangle_h\}$ be the set of maximal separating triangles of $G_{\triangle_v}$. Since G_v is 4-connected, by Lemma 11, $G_{\triangle_v}$ has an st-orientation $\mathcal{O}_{\triangle_v}$ such that:

$$\begin{aligned}\text{length}(\mathcal{O}_{\triangle_v}) &\leq \frac{3}{4}|G_{\triangle_v}| + 2\lceil\sqrt{|G_v|}\rceil + 4 + \frac{\sum_{i=1}^{h}|I(G_{\triangle_i})|}{4}\\ \text{length}(\mathcal{O}^*_{\triangle_v}) &\leq \frac{3}{2}|G_{\triangle_v}| + \frac{\sum_{i=1}^{h}|I(G_{\triangle_i})|}{2}.\end{aligned}$$

Let $G_{ext} = G - I(G_{\triangle_v})$. Then G_{ext} has an st-orientation such that $\text{length}(\mathcal{O}_{ext}) \leq |G_{ext}| - 1$ and $\text{length}(\mathcal{O}^*_{ext}) \leq 2|G_{ext}| - 5$. Let $\mathcal{O} = \mathcal{O}_{ext} \oplus \mathcal{O}_{\triangle_v}$. Then:

$$\begin{aligned}\text{length}(\mathcal{O}) &\leq \text{length}(\mathcal{O}_{ext}) + \text{length}(\mathcal{O}_{\triangle_v}) - 2\\ &\leq (|G_{ext}| - 1) + \frac{3}{4}|G_{\triangle_v}| + 2\lceil\sqrt{|G_v|}\rceil + 4 + \frac{\sum_{i=1}^{h}|I(G_{\triangle_i})|}{4} - 2\\ &= \frac{3}{4}|G_{ext}| + \frac{1}{4}|G_{ext}| + \frac{3}{4}|G_{\triangle_v}| + 2\lceil\sqrt{|G_v|}\rceil + \frac{\sum_{i=1}^{h}|I(G_{\triangle_i})|}{4} + 1\\ &= \frac{3}{4}(|G| + 3) + \frac{1}{4}(|V(G_{ext}) \cup (\cup_{i=1}^{h} I(G_{\triangle_i}))|) + 2\lceil\sqrt{|G_v|}\rceil + 1\\ &= \frac{3}{4}(n + 3) + \frac{1}{4}(n - |G_v| + 3) + 2\lceil\sqrt{|G_v|}\rceil + 1\\ &= \frac{3}{4}n + \frac{1}{4}(n - |G_v|) + 2\lceil\sqrt{|G_v|}\rceil + 4\\ \text{length}(\mathcal{O}^*) &= \text{length}(\mathcal{O}*_{ext}) + \text{length}(\mathcal{O}^*_{\triangle_v}) - 1\\ &\leq (2|G_{ext}| - 5) + (\frac{3}{2}|G_{\triangle_v}| + \frac{\sum_{i=1}^{h}|I(G_{\triangle_i})|}{2}) - 1\\ &= \frac{3}{2}|G_{ext}| + \frac{3}{2}|G_{\triangle_v}| + \frac{1}{2}|G_{ext}| + \frac{\sum_{i=1}^{h}|I(G_{\triangle_i})|}{2} - 6\\ &= \frac{3}{2}(|G| + 3) + \frac{1}{2}(|I(G_{ext}) \cup (\cup_{i=1}^{h} I(G_{\triangle_i}))| + 3) - 6 = \frac{3}{2}n + \frac{1}{2}(n - |G_v|)\end{aligned}$$

This completes the proof. ◀

▶ **Theorem 13.** *Every plane triangulation G of n vertices has a VR with height* $\leq \max\{\frac{23}{24}n + 2\lceil\sqrt{n}\rceil + 4, \frac{11}{12}n + 13\}$ *and width* $\leq \frac{23}{12}n$.

Proof. By Lemma 9, there are two cases:

Case 1: G has a 4-block component with size $n_1 \geq n/6$. By Theorem 12, G has an st-orientation $\mathcal{O}$ such that $\text{length}(\mathcal{O}) \leq \frac{3}{4}n + \frac{n-n_1}{4} + 2\lceil\sqrt{n}\rceil + 4$ and $\text{length}(\mathcal{O}^*) \leq \frac{3n}{2} + \frac{(n-n_1)}{2}$. Since $n_1 \geq \frac{n}{6}$, we have: $\text{length}(\mathcal{O}) \leq \frac{23}{24}n + 2\lceil\sqrt{n}\rceil + 4$ and $\text{length}(\mathcal{O}^*) \leq \frac{23}{12}n$.

Case 2: G has a set of unrelated separating triangles $\{\triangle_1, \triangle_2, \ldots, \triangle_h\}$ such that:

- For all i, $|G_{\triangle_i}| \geq 5$, (which implies $|I(G_{\triangle_i})| \geq 2$).
- $\frac{n}{4} - 3 \leq \sum_{i=1}^{h} |I(G_{\triangle_i})| \leq \frac{3}{4}n - 3$.

Since $\mathcal{X}(z) \geq z/3$ for all $z \geq 2$, we have:

$$\sum_{i=1}^{h} \mathcal{X}(|I(G_{\triangle_i})|) \geq \frac{\sum_{i=1}^{h} |I(G_{\triangle_i})|}{3}.$$

By Theorem 10, G has an st-orientation $\mathcal{O}$ such that

$$\begin{aligned}
\text{length}(\mathcal{O}) &\leq \frac{2n}{3} + \frac{|\cup_{i=1}^{h} I(G_{\triangle_i})|}{3} + 14 \leq \frac{2n}{3} + \frac{3n/4 - 3}{3} + 14 = \frac{11}{12}n + 13 \\
\text{length}(\mathcal{O}^*) &\leq 2n - 5 - \sum_{i=1}^{h} \mathcal{X}(|I(G_{\triangle_i})|) \leq 2n - 5 - \frac{n/4 - 3}{3} < \frac{23}{12}n.
\end{aligned}$$

In either case, the orientation $\mathcal{O}$ leads to a VR of G with the stated width and height. ◀

5 Conclusion

In this paper, we showed that every plane graph of n vertices has a VR with height $\leq \max\{\frac{23}{24}n + 2\lceil\sqrt{n}\rceil + 4, \frac{11}{12}n + 13\}$ and width $\leq \frac{23}{12}n$. This is the first VR construction for general plane graphs that simultaneously bounds the height and the width from the trivial upper bound. The gap between the size of our VR and the known lower bound is still large. It would be interesting to find more compact VR constructions.

References

1. G. di Battista, P. Eades, R. Tammassia, and I. Tollis, Graph Drawing: Algorithms for the Visualization of Graphs, Prentice Hall, 1999.
2. C.Y. Chen and Y.F. Hung and H.I. Lu, Visibility Representations of Four Connected Plane Graphs with Near Optimal Heights, *GD 2009*, LNCS, vol. 5417, pp. 67-77, Springer, 2009.
3. J.H. Fan, C.C. Lin, H.I. Lu and H.C. Yen, Width-optimal visibility representations of plane graphs, *ISSAC 2007*, LNCS vol. 4835, pp. 160-171, Springer, 2007.
4. H. Zhang and X. He, Nearly optimal visibility representations on plane graphs, *ICALP 2006*, LNCS, vol. 4051, pp. 407-418, Springer, 2006.
5. X. He, J-J Wang, and H. Zhang Compact Visibility Representation of 4-Connected Plane Graphs, to appear in Proc. *COCOA 2010*.
6. G. Kant, A more compact visibility representation. *International Journal of Computational Geometry and Applications* 7, pp. 197-210, 1997.

7 G. Kant and X. He, Regular edge labeling of 4-connected plane graphs and its applications in graph drawing problems. *Theoretical Computer Science* 172, pp. 175-193, 1997.

8 A. Lempel, S. Even and I. Cederbaum, An algorithm for planarity testing of graphs, in *Theory of Graphs (Proc. of an International Symposium, Rome,July 1966)*, pp. 215-232, 1967.

9 C.-C. Lin, H.-I. Lu and I-F. Sun, Improved compact visibility representation of planar graph via Schnyder's realizer, *SIAM Journal on Discrete Mathematics*, 18, pp. 19-29, 2004.

10 P. Ossona de Mendez, Orientations bipolaires. PhD thesis, Ecole des Hautes Etudes en Sciences Sociales, Paris, 1994.

11 Charalampos Papamanthou and Ioannis G. Tollis, Applications of Parameterized st-Orientations in Graph Drawing Algorithms, *Proc. 13th International Symposium on Graph Drawing*, LNCS vol. 3843, pp. 355-367, Springer, 2005.

12 Charalampos Papamanthou and Ioannis G. Tollis, Parameterized st -Orientations of Graphs: Algorithms and Experiments, *Proc. 14th International Symposium on Graph Drawing*, LNCS Vol. 4372, pp. 220-233, Springer, 2006.

13 P. Rosenstiehl and R. E. Tarjan, Rectilinear planar layouts and bipolar orientations of planar graphs. *Discrete Comput. Geom.* 1, pp. 343-353, 1986.

14 R. Tamassia and I.G.Tollis, An unified approach to visibility representations of planar graphs. *Discrete Comput. Geom.* 1, pp. 321-341, 1986.

15 H. Zhang and X. He, Canonical Ordering Trees and Their Applications in Graph Drawing, *Discrete Comput. Geom.* 33, pp. 321-344, 2005.

16 H. Zhang and X. He, Visibility Representation of Plane Graphs via Canonical Ordering Tree, *Information Processing Letters* 96, pp. 41-48, 2005.

17 H. Zhang and X. He, Improved Visibility Representation of Plane Graphs, *Computational Geometry: Theory and Applications* 30, pp. 29-29, 2005.

18 H. Zhang and X. He, An Application of Well-Orderly Trees in Graph Drawing, *Proc. 13th International Symposium on Graph Drawing*, LNCS Vol. 3843, pp. 458-467, Springer, 2005.

19 H. Zhang and X. He, Optimal *st*-orientations for plane triangulations, *J. Comb. Optim.* 17, pp. 367-377, 2009.