HAL
open science

The synthesis of cost optimal heat exchanger networks with unconstrained topology

Andrea Toffolo

To cite this version:

Andrea Toffolo. The synthesis of cost optimal heat exchanger networks with unconstrained topology. Applied Thermal Engineering, 2009, 29 (17-18), pp.3518. 10.1016/j.applthermaleng.2009.06.009 . hal-00573477

HAL Id: hal-00573477

https://hal.science/hal-00573477v1

Submitted on 4 Mar 2011

HAL is a multi-disciplinary open access archive for the deposit and dissemination of scientific research documents, whether they are published or not. The documents may come from teaching and research institutions in France or abroad, or from public or private research centers.

L'archive ouverte pluridisciplinaire **HAL**, est destinée au dépôt et à la diffusion de documents scientifiques de niveau recherche, publiés ou non, émanant des établissements d'enseignement et de recherche français ou étrangers, des laboratoires publics ou privés.

Accepted Manuscript

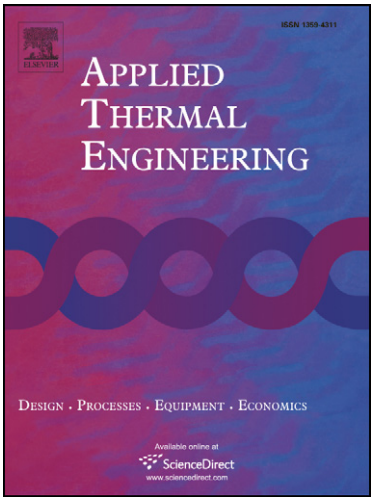

The synthesis of cost optimal heat exchanger networks with unconstrained topology

Andrea Toffolo

PII: S1359-4311(09)00187-2
DOI: 10.1016/j.applthermaleng.2009.06.009
Reference: ATE 2836

To appear in: *Applied Thermal Engineering*

Received Date: 29 September 2008
Accepted Date: 6 June 2009

Please cite this article as: A. Toffolo, The synthesis of cost optimal heat exchanger networks with unconstrained topology, *Applied Thermal Engineering* (2009), doi: 10.1016/j.applthermaleng.2009.06.009

This is a PDF file of an unedited manuscript that has been accepted for publication. As a service to our customers we are providing this early version of the manuscript. The manuscript will undergo copyediting, typesetting, and review of the resulting proof before it is published in its final form. Please note that during the production process errors may be discovered which could affect the content, and all legal disclaimers that apply to the journal pertain.

ACCEPTED MANUSCRIPT

THE SYNTHESIS OF COST OPTIMAL HEAT EXCHANGER NETWORKS WITH UNCONSTRAINED TOPOLOGY

Andrea Toffolo*
Department of Mechanical Engineering
University of Padova
Via Venezia, 1 - 35131 Padova – Italy

ABSTRACT

The optimization of heat exchanger network (HEN) synthesis still remains an open problem because of the complexity of the space comprising all the possible solutions, and most of the proposed methods introduce simplifying assumptions that mainly affect the topological features of the candidate solutions considered and thus artificially limit the boundaries of the search space.

This work is devoted to the pursuit of cost-optimal HENs with unconstrained topology, exploiting the advantages deriving from two graph representations of a HEN. One representation is used by an evolutionary algorithm to manage HEN topology and the other is used by a NLP algorithm to manage heat load distribution among the exchangers. The proposed two-level hybrid optimization method is applied to four test cases taken from the literature about HEN synthesis, among which the well-known Aromatics Plant problem.

Keywords: synthesis optimization, heat exchanger networks, graph theory.

NOMENCLATURE

c	unit annualized cost [$/kWy]
C	annualized cost [$/y]

* corresponding author. Phone: + 39 049 827 6748
Fax: +39 049 827 6785, E-mail: andrea.toffolo@unipd.it

ACCEPTED MANUSCRIPT

FC_P	heat capacity flow rate [kW/K]
h	side film coefficient [kW/m^{2}K]
H	enthalpy flow rate [kW]
m	surface exponent
n	number of
Q	heat load [kW]
S	heat exchanger surface [m^2]
T	temperature [K or °C]
U	heat transfer coefficient [kW/m^{2}K]

Subscripts

c	cold side
C	cooler
CU	cold utility
e	exit
EX	heat exchanger
f	fixed
h	hot side
H	heater
HU	hot utility
i	inlet
LM	logarithmic mean
s	surface dependent
t	total

Acronyms

EG	evaluation graph

ACCEPTED MANUSCRIPT

ACCEPTED MANUSCRIPT

HEN	heat exchanger network
MER	maximum energy recovery
MINLP	mixed integer non-linear programming
NLP	non-linear programming
RG	representation graph
SQP	sequential quadratic programming

1. INTRODUCTION

The problem of heat exchanger network (HEN) synthesis is widely studied in the field of process integration, due to its importance in determining the amount of the internal energy recovery, and thus the savings in primary energy consumption. The most recent publications about applications of process integration (see, e.g., [1-5]) and various aspects of HEN synthesis (see, e.g., [6-10]) confirm the interest of the research community in this field, the ultimate aim of which is cleaner production.

In particular, in the HEN synthesis problem a challenging compromise between the reduction of the requirements from external hot and cold utilities and the increase in the number and in the heat transfer surface of heat exchanger units has to be found in assessing minimum total costs. The difficulty of this task is due to the vastness of the search space that has to be considered. In fact, the number of combinations resulting from stream splitting and remixing, stream matching and the distribution of heat loads among the exchangers is enormous even for a small number of hot and cold streams.

In their comprehensive review of this research field [11], Furman and Sahinidis conclude that important issues are still to be addressed in spite of the latest new or improved techniques:

ACCEPTED MANUSCRIPT

ACCEPTED MANUSCRIPT

- heuristic-based methods do not seem to provide a worst-case performance guarantee;
- efficient optimization algorithms and robust formulations should be used to deal with the combinatorial complexity of the problem and the presence of local optima;
- restrictive simplifying assumptions preclude the path towards the global optimal solution of a complete formulation of the problem.

In particular, the latter issue is the main motivation to this paper, since most of the HEN synthesis strategies proposed in the literature limit in advance the types and the number of elementary topological features that are considered in the optimization process.

On the contrary, this work presents a new optimization algorithm for the synthesis of HENs, which allows networks with unconstrained topology to be defined. This means that neither network topology is bounded (e.g. the number of stream matches is not limited) nor its features are decided in advance (e.g. the maximum number of branches per split stream and the maximum number of heat exchangers arranged in a branch are not fixed). If the purpose is to let network topology be really unconstrained, then it cannot be handled by deterministic algorithms, which are usually associated with the definition of a superstructure embedding the subset of all the considered solutions. As a consequence, an evolutionary algorithm is used here to manage HEN topology, and this is made possible by establishing a suitable codification of the structure of a candidate solution, so that it can be handled by genetic operators. In fact, the key to dealing with unconstrained topologies relies in the representation of HEN structure. A suitable representation should be able to codify *any* feasible topology and to codify it *bi-univocally* (i.e. there should be a one-to-one correspondence between a network and its representation). According to these basic requirements, for example, a

ACCEPTED MANUSCRIPT

matrix representation of stream matches is disregarded, because it is not univocal and it cannot codify, for instance, two stream matches on a given stream branch. A very simple and effective graph-based representation is suggested in this work, focusing on heat exchanger sides, their junctions and the matches among them. Then this representation is further transformed into another graph-based one that focuses on the enthalpy flows circulating in the network and is suitable for the optimization of the heat load distribution among the exchangers of a given HEN topology.

In the following sections the problem of HEN synthesis optimization is defined, a brief survey is given about the methods proposed in the literature to solve it and some details of the proposed algorithm are introduced; finally, the latter is applied to four test cases taken from the literature, one of them being the well-known Aromatics Plant problem.

2. FORMULATION OF THE HEN SYNTHESIS PROBLEM

Grass-root HEN synthesis problem is generally formulated as:

"design from scratch a network of heat exchangers with minimum total (investment and operating) costs given

1. a set of hot streams to be cooled, with their inlet and outlet temperatures, heat capacity flow rates and film coefficients;
2. a set of cold streams to be heated, with their inlet and outlet temperatures, heat capacity flow rates and film coefficients;
3. a set of cost laws for the heat exchangers and for the use of auxiliary heat sources or sinks (the external utilities)."

ACCEPTED MANUSCRIPT

ACCEPTED MANUSCRIPT

As in most of the problems proposed in the literature, the objective function used in this work evaluates the annualized total costs (to be minimized) according to the following expression:

$$C_t = \sum_j^{n_{EX}} \left(C_{f,EX,j} + C_{s,EX,j} S_j^{m_j} \right) + c_{HU} \sum_j^{n_H} Q_{HU,j} + c_{CU} \sum_j^{n_C} Q_{CU,j} \quad (1)$$

in which the same type of cost law is used for all the heat exchangers (coolers and heaters included), that is the sum of a fixed component ($C_{f,EX}$) and a surface-dependent component ($C_{s,EX}S^m$). Heat exchanger surfaces are calculated assuming a counter-current heat transfer:

$$S_j = Q_{EX,j} / \left(U \Delta T_{LM} \right) \quad (2)$$

in which the heat transfer coefficient is:

$$U = \left(1/h_h + 1/h_c \right)^{-1} \quad (3)$$

The exponent m in Eq. 1 is usually in the range between 0.6 and 1. If m=1 and $C_{f,EX}$ is low, HEN optimal design will be quite independent from the number of heat exchanger units, whereas, if m<1 and $C_{f,EX}$ is relatively high, small units will be penalized and designs featuring a lower number of units will be promoted. Finally, if both $C_{f,EX}$ and $C_{s,EX}$ can be neglected, the search is driven towards a maximum energy recovery (MER) design that minimizes the transfer from/to external utilities.

3. APPROACHES AND ALGORITHMS FOR HEN SYNTHESIS

The approaches suggested in the literature for optimized HEN synthesis can be divided into two main categories [11]: sequential and simultaneous.

Sequential approaches use some heuristics to decompose a priori the optimization problems into a chain of sub-problems requiring a much lower

ACCEPTED MANUSCRIPT

computational burden. The sub-problems are solved in a given sequence, so that the solution of a sub-problem is used as a constraint for the following ones. A typical decomposition consists in:

1. minimizing the need of (i.e. the cost due to) external utilities;
2. minimizing the number of HEN units;
3. minimizing heat exchanger surfaces.

Design guidelines and heuristic rules (e.g., the Pinch Design Method [12]) or mathematical programming techniques (see, e.g., [13]) are applied to solve the sub-problems and to obtain the final HEN design. However, this kind of approach is not suitable to guarantee the optimal solution, since it considers the cost of external utilities as the most dominating and therefore it is biased towards MER designs.

Simultaneous approaches exploit other simplifying assumptions to reduce the computational complexity. In general, a HEN superstructure is defined, i.e. a complex topology that embeds all the possible network configurations and all the possible stream matches that the designer chooses to consider. The optimal HEN design, the topology of which can only be a simplified version of the superstructure, is searched by applying mixed-integer non-linear programming (MINLP) techniques, integer decision variables governing network topology (e.g., presence/absence of heat exchangers, stream splitting) and real decision variables governing exchanger heat loads. The superstructure proposed by Yee et al. [14] is the most popular in the literature about HEN synthesis. Network topology is subdivided into stages with no actual physical meaning (Figure 1), in which each stream of one type (hot/cold) is split into a number of branches that is equal to the number of streams of the other type and heat exchangers are allowed to transfer heat from any stream of one type to any stream of the other type, but only once. No bypass stream is allowed, and the split streams are re-mixed isothermally at the end

ACCEPTED MANUSCRIPT

of each stage. This elementary structure is repeated for a fixed number of times, which is not greater than the maximum number of cold or hot streams, and one utility heat exchanger is placed at the outlet of each stream.

In simultaneous approaches, non-deterministic algorithms are mostly used to search for the optimal HEN configuration and heat loads. In fact, Furman and Sahinidis [15] demonstrated that the HEN synthesis problem belongs to a particularly difficult class of optimization problems (it is NP-hard in the strong sense) for which a computationally efficient (i.e. polynomial) exact solution algorithm does not exist. This has opened the path to the use of evolutionary algorithms and meta-heuristic methods (e.g., tabu search), which do not guarantee that the true optimum is found but have proved to explore effectively the complex search space of the problem finding the most promising regions. However, these techniques are applied in general to restricted formulations of the HEN synthesis problem, as it is shown in the following four examples.

The evolutionary strategy suggested by Gross et al. [16] tries to codify the candidate optimal networks into a graph representation that can be handled by evolutionary operators. Graph nodes represent network components (heat exchangers, splitters and mixers) and graph edges represent the connections among the components. The maximum number of nodes is fixed and the different candidate network topologies are obtained by switching the nodes from an active to a non-active state (or vice versa) and rearranging the connections accordingly. However, if nodes cannot be switched from one component type to another as well by the evolutionary algorithm, this representation is actually equivalent to a superstructure defined in advance.

In the method proposed by Lewin [17] a genetic algorithm manages topology optimization, integer variables being involved to represent possible stream matches. The

ACCEPTED MANUSCRIPT

order of stream matches is taken into account using the concept of "level": only a restricted combination of stream matches is permitted within each level, and structural complexity is governed by the chosen maximum number of levels. Actually, under these hypotheses the resulting possible configurations are only a subset of those embedded in the stagewise superstructure proposed by Yee and al. [14].

Lin and Miller [18] apply tabu search, a meta-heuristic approach that is suitable for combinatorial optimization problems, to the stagewise superstructure by Yee et al. [14] exclusively. Tabu search consists in a memory-based neighbor search approach which guides the process using a list of the tabu (forbidden) moves to keep track of search history.

Pariyani et al. [19] use a random search algorithm, the structure of a candidate optimal network being defined by limiting the number of heat exchangers in each stream to a maximum and by assigning randomly the matches. Only one stream per network can be split in two branches only (with isothermal mixing). The only variant from the other topologies mentioned in this section is that a branch of a split stream may pass through more than one heat exchanger.

Finally, it is worth noting that very recent publications about evolutionary methods for HEN synthesis still restrict a priori the topology of the candidate solution considered:

- Ravagnani et al. [20] use an ordered list of stream matches to represent HEN topology. Stream splitting, which cannot be taken into account in such a representation, is decided in an earlier step in which the problem is heuristically divided into sub-problems and sub-networks;
- Jezowski et al. [21] define a superstructure of the possible stream matches for the solution of HEN retrofit problems;

ACCEPTED MANUSCRIPT

- Dipama et al. [22] use a level-based representation similar to the one proposed by Lewin [17] and do not consider stream splitting;
- Yerramsetty and Murty [23] define a stagewise topology in which the number of stages and the number of branches into which a stream can be split within one stage are limited. Moreover, each branch can have a maximum of one exchanger in a particular stage.
- Ponce-Ortega et al. [24] and Luo et al. [25] use the stagewise superstructure suggested by Yee et al. [14];
- Khorasany and Fesanghary [26] use the level-based representation by Lewin [17].

4. THE PROPOSED ALGORITHM FOR HEN SYNTHESIS OPTIMIZATION

The algorithm proposed in this work for the optimization of HEN synthesis is organized in two levels, as shown in Figure 2. The optimization is driven by the upper level algorithm, which is an evolutionary algorithm that generates new candidate HEN topologies by applying genetic operators to a graph-based representation of the HEN. The lower level algorithm is a sequential quadratic programming (SQP) algorithm that evaluates the objective function for the topologies generated by the upper level algorithm, minimizing the annualized total costs (Eq. 1) of a given topology. The essentials of both algorithms are discussed in the following.

4.1 The Upper Level Algorithm and the Representation Graph

The upper level algorithm follows the steps of an elitist evolutionary strategy starting from a set of network topologies ("old population" in Figure 2). In the reproduction phase, a reproduction pool is formed by randomly choosing some of these

ACCEPTED MANUSCRIPT

topologies and an "offspring population" is generated by applying a mutation operator to each of the topologies in the pool. These operators, which are described below, randomly modify the "old" topology to generate an "offspring" topology that is similar, but not identical, to the original one (as it is shown in Figure 2). After the minimum total costs of the topologies in the offspring population have been evaluated by the lower level algorithm, the topologies of both the old and offspring populations are sorted in the selection phase, and those having the higher minimum total costs are discarded. The remaining topologies form the "new population" that replaces the old one in the next iteration ("generation") of the upper level algorithm.

The directed graph that is used in the upper level algorithm to deal with HEN topology is called the Representation Graph (RG). All RG edges represent a heat exchanger side, except for stream inlet edges (stream outlet edges represent heater cold sides or cooler hot sides). RG vertices represent the junctions among inlets and outlets of heat exchanger sides, so they represent splitters and mixers when a vertex is shared by more than two edges. Edge direction is the same of the flow within a stream. The pairing between heat exchanger sides is taken into account by assigning an integer to each RG edge, except for stream inlet and outlet edges. Figure 3 shows the RG of a simple HEN.

This representation is very flexible and suitable to handle topologies of any level of complexity without limitations or constraints on the number of stream matches and on the number of branches after stream splitting. The only forbidden topologies are:

- loops and auto-loops (mass recirculations within a stream);
- by-passes (branches that do not contain a heat exchanger side);
- any other heaters or coolers besides those on stream outlet edges,

ACCEPTED MANUSCRIPT

because it is easy to demonstrate that, problem data being equal, these features would make the distance between the hot and cold composite curves narrower, increasing heat exchanger surfaces and, as a consequence, HEN total costs.

The mutation operators applied in the reproduction phase to generate offspring topologies from the old ones are three and their effects are shown in Figure 4:

M1) adds a heat exchanger, i.e. adds a side to a hot stream, a side to a cold stream and links the two (probability = 50%);

M2) deletes an existing heat exchanger (35%);

M3) swaps the links between the hot and cold sides of two existing heat exchangers (15%).

In order to guarantee that network topology does not evolve according to a small number of features fixed in advance, a heat exchanger side can be added to a stream in three different ways (with equal probability):

- two vertices of the RG are selected at random and a new edge (i.e. the new heat exchanger side) is added to connect them (see the first two rows in Figure 5);
- an existing edge of the RG is split in two edges, one of the two (at random) being the one that represents the new heat exchanger side (see the third row in Figure 5);
- an existing vertex of the RG is selected and substituted with two vertices, one being the end vertex of the edges entering the original one and the other being the starting vertex of the edges exiting the original one. The two vertices are then connected with a new edge that represents the new heat exchanger side (see the fourth row in Figure 5);

It is also worth noting that when a heat exchanger side is deleted from a stream the resulting network topology may feature streams with unfeasible intermediate sources or

ACCEPTED MANUSCRIPT

sinks. In order to avoid this, the two vertices of the removed edge must be merged into one if one of the two vertices has a degree equal to 1 after the removal. The need for this precaution is illustrated in the last two rows in Figure 5.

4.2 The Lower Level Algorithm and the Evaluation Graph

The lower level SQP algorithm searches for the minimum C_t (Eq. 1) of a given HEN topology exploiting some ideas already proposed in [27] and further developed in this work. Another graph describing HEN topology, the Evaluation Graph (EG), is built from the RG according to the following rules (see Figure 6):

- a vertex, representing the heat exchanger side, is added in the middle of each RG edge (except for stream inlet edges);
- new edges are added to connect the pairs of heat exchanger sides, from the hot side to the cold side;
- heater cold sides and cooler hot sides are connected, according to the direction of heat transfer, to a new vertex ("E" in Figure 6) representing external utilities.

This special representation allows EG edges, considered with their direction, to be associated with the enthalpy flows inside the HEN. This is very important in order to exploit a property of the EG graph that significantly simplifies the formulation of the nonlinear optimization problem. Let H_{0j} be the enthalpy flows of a candidate solution to the optimization problem (i.e. they satisfy the enthalpy balances at EG vertices and comply with problem data). Then, according to graph theory [28], the enthalpy flows H_j of any other candidate solution can be expressed as:

$$H_j = H_{0j} + \sum_{k=1}^{nc} \alpha_{jk} \overline{H}_k \qquad (4)$$

ACCEPTED MANUSCRIPT

in which each $\overline{H}_k$ is an appropriate enthalpy flow circulating in the *k*-th cycle of a set of the *nc* independent cycles of the EG (see the example in Figure 6) and the coefficients α_{jk} are equal to:

- 0 if the *j*-th EG edge does not belong to the *k*-th independent cycle;
- +1 if the *j*-th EG edge belongs to the *k*-th independent cycle and its direction is the same chosen for $\overline{H}_k$;
- -1 if the *j*-th EG edge belongs to the *k*-th independent cycle and its direction is opposite to that chosen for $\overline{H}_k$.

The number of independent cycles in the EG (*nc*) is equal to the number of EG edges minus the number of EG vertices plus 1 [28]. As it appears from the example in Figure 6, EG cycles basically result from either stream matches or stream splitters.

Taking advantage of this fundamental property of the EG, the $\overline{H}_k$ are used as the decision variables of the optimization problem, and the H_{0j} (which can be considered as the enthalpy flows of the initial solution) are evaluated by imposing that all heat exchanger loads are equal to zero (except for heaters and coolers, so that all T_e are reached relying on the external utilities only) and mass flow rates are equally partitioned at splitters.

The constraints the objective function is subject to are:

- the heat loads of all heat exchangers matching two streams (i.e. the enthalpy flows of the edges connecting hot sides to cold sides) must be greater than or equal zero;
- the heat loads of heaters and coolers (i.e. the enthalpy flows of the edges entering or exiting the “E” vertex) must be greater than or equal to zero;

ACCEPTED MANUSCRIPT

- the enthalpy flows in all EG edges representing a physical stream or one of its branches must be greater than or equal to zero, in order to avoid mass recirculations among stream branches;
- the temperature differences at both ends of each heat exchanger must be greater than a minimum value ΔT_{min} assumed as a technological limit.

It is worth noting that in this formulation enthalpy balances are automatically satisfied thanks to EG property expressed in Eq. 4. Accordingly, no equality constraints have to be imposed, contrary to the case in which mass flow rates and temperature were chosen as decision variables.

5. THE TEST CASES

In this section, the presented method is applied to four test cases taken from the literature about HEN synthesis. These cases are selected in order to set a comparison with as many solutions as possible that are proposed in the works by other authors as best results of the methods they suggest.

5.1 The 4SP problem

This is a very simple problem with only two hot and two cold streams (see problem data in Table 1), yet it can be used to show effectively that the networks with unconstrained topologies are superior to those derived from superstructures. In fact, the cost optimal network found by the proposed algorithm (which was run for 100 generations using a population of 50 individuals) has a topological feature that is not considered in the usual superstructures, that is a series of two heat exchangers in a branch of stream H1 (Figure 7). The comparison in Table 2 shows that total cost of the

ACCEPTED MANUSCRIPT

ACCEPTED MANUSCRIPT

network shown in Figure 7 is lower than the two other solutions taken from the literature, because of a better trade-off between the number of units and the sum of unit surfaces (exponent *m* in Eq. 1 is equal to 1 and costs due to cold utility requirement are the same for all the solutions).

5.2 The 6SP problem

This problem features 5 hot streams and just one cold stream (see problem data in Table 3), but the distinctive attribute of this test case is that the hot streams cannot be split (and, therefore, the genetic operators manipulating these streams are modified accordingly). The cost optimal network found by the proposed algorithm (which was run for 100 generations using a population of 100 individuals) is shown in Figure 8. As a result of the constraint on hot stream structure, the cold stream has a quite complex and unusual topology. The comparison in Table 4 reveals that the total cost of the network shown in Figure 8 is lower than that of two other solutions taken from the literature. It is worth noting that the exponent *m* in the objective function (equal to 0.6) promotes heat exchanger units with larger duties, and this is the reason why the cost-optimal HEN found is not a MER design, although heat transfer across the pinch point (380-370K) occurs only in one exchanger (the one matching H3 and one of the branches of the cold stream). Two solutions having lower total costs can be found in [15] and [16] and they too are reported in Table 4 (571,698$/y and 572,476$/y, respectively), but the constraint ΔT_{min}=10K (Table 3) is not included in those formulations of the 6SP problem. If the constraint on ΔT_{min} is removed, the proposed algorithm is still able to find a network (Figure 9) the total costs of which are lower (570930$/y, see Table 4).

5.3 The Aromatics Plant problem

ACCEPTED MANUSCRIPT

The Aromatics Plant problem proposed by Linnhoff and Ahmad [31] (see problem data in Table 5) has been widely studied in the literature. One of the most challenging features is that the hot utility (oil) has to be cooled to a temperature (250°C) which is lower than the final temperatures of two of the cold streams (C1 and C5, which must be heated up to 300°C).

The proposed algorithm was run for 200 generations using a population of 200 individuals (only 40,000 HEN topologies were examined) and the best solution found is shown in Figure 10. It features a large number of units (n_{EX}=15), since the objective function has a linear dependence from heat exchanger surfaces. Note that network topology cannot be derived from the stagewise superstructure proposed in [14], because one of the branches of stream H4 is matched to two cold streams (C1 and C2). The comparison with other solutions from the literature, proposed in Table 6, shows that the HEN in Figure 10 is cheaper than the other solutions because of the apparently lower hot and cold utility requirements.

Another solution to the same problem, the minimum total costs of which are very close to the optimal value found (2,920,272$/y instead of 2,920,130$/y), is shown in Figure 11. This network has fewer units than the optimal one (12 instead of 15), but its external utility requirements are higher. Near optimal solutions are important because they may feature design variations that could be preferable if other criteria, such as control, were to be considered.

5.4 The 10SP1 problem

The last test case features 5 hot and 5 cold streams (see problem data in Table 7). The cost optimal network found by the proposed algorithm (which was run for 200 generations using a population of 200 individuals) is shown in Figure 12. The

ACCEPTED MANUSCRIPT

comparison in Table 8 shows that this network is the cheapest among the solutions proposed in the literature, although the margin for improvement is narrow. In fact, fixed costs of heat exchanger units are not considered in the problem (so the number of units does not affect total costs) and all the solutions have the same cold utility requirements. The only chance to lowering total costs is, therefore, to reduce the surface-dependent costs of the heat exchanger units, keeping in mind that the exponent *m* (equal to 0.6) penalizes units with small duties.

6. CONCLUSIONS AND FUTURE WORK

This work presented a two-level hybrid optimization methodology for the synthesis of HENs. The advantages of HEN representation by means of directed graphs were fully exploited in order to:

- deal with HEN topologies of any level of complexity, avoiding the use of superstructures and other limiting assumptions;
- simplify the formulation of the nonlinear optimization problem about the minimization of the total costs for a given HEN topology by considering the enthalpy flows circulating in a set of graph independent cycles as decision variables.

A promising result was obtained on a well-known test case taken from the literature.

Further developments will be aimed at taking into account multiple objectives in HEN synthesis optimization and at extending the analysis of HEN costs by considering pressure drop effects and other details about heat exchanger design.

ACCEPTED MANUSCRIPT

ACCEPTED MANUSCRIPT

REFERENCES

[1] V.K. Bulasara, R. Uppaluri, A.K. Ghoshal, Revamp study of crude distillation unit heat exchanger network: Energy integration potential of delayed coking unit free hot streams. Applied Thermal Engineering (2008), doi:10.1016/j.applthermaleng.2008.11.013

[2] C.-L. Chen , C.-Y. Chang, A resource-task network approach for optimal short-term/periodic scheduling and heat integration in multipurpose batch plants. Applied Thermal Engineering 29 (2009) 1195–1208.

[3] M. Higa, A.J. Freitas, A.C. Bannwart, R.J. Zemp, Thermal integration of multiple effect evaporator in sugar plant. Applied Thermal Engineering 29 (2009) 515–522.

[4] S. Bandyopadhyay, J. Varghese, V. Bansal, Targeting for cogeneration potential through total site integration. Applied Thermal Engineering (2009), doi:10.1016/j.applthermaleng.2009.03.007

[5] H. Tokos, Z.N. Pintarič, P. Glavič, Energy saving opportunities in heat integrated beverage plant retrofit. Applied Thermal Engineering (2009), doi:10.1016/j.applthermaleng.2009.03.008

[6] D.C.Y. Foo, Y.H. Chew, C.T. Lee, Minimum units targeting and network evolution for batch heat exchanger network. Applied Thermal Engineering 28 (2008) 2089–2099.

[7] A.I.A. Salama, Optimal assignment of multiple utilities in heat exchange networks, Applied Thermal Engineering (2008), doi: 10.1016/j.applthermaleng.2008.12.011

[8] R. Nordman, T. Berntsson, Use of advanced composite curves for assessing cost-effective HEN retrofit I: Theory and concepts. Applied Thermal Engineering 29 (2009) 275–281.

[9] R. Nordman, T. Berntsson, Use of advanced composite curves for assessing cost-effective HEN retrofit II: Case studies. Applied Thermal Engineering 29 (2009) 282–289.

[10] L. Sikos, J. Klemeš, Reliability, availability and maintenance optimisation of heat exchanger networks, Applied Thermal Engineering (2009), doi: 10.1016/j.applthermaleng.2009.02.013

[11] K.C. Furman, N.V. Sahinidis, A critical review and annotated bibliography for heat exchanger network synthesis in the 20th century. Industrial & Engineering Chemistry Research 41 (2002) 2335–2370.

[12] B. Linnhoff, E. Hindmarsh, The Pinch Design Method for heat exchanger networks. Chemical Engineering Science 38 (1983) 745-763.

[13] C.A. Floudas, A.R. Ciric, I.E. Grossmann, Automatic synthesis of optimum heat exchanger network configurations. AIChE Journal 32 (1986) 276-290.

[14] T.F. Yee, I.E. Grossmann, Z. Kravanja, Simultaneous optimization models for heat integrations - I. Area and energy targeting and modeling of multi-stream exchangers. Computers & Chemical Engineering 14 (1990) 1151-1164.

[15] K.C. Furman, N.V. Sahinidis, Computational complexity of heat exchanger network synthesis. Computers & Chemical Engineering 25 (2001) 1371–1390.

[16] B. Groβ, U. Hammel, P. Maldaner, A. Meyer, P. Roosen, M. Schütz, Optimization of heat exchanger networks by means of evolution strategies, in Proceedings of the International Conference on Evolutionary Computation, 1996.

ACCEPTED MANUSCRIPT

[17] D.R. Lewin, A generalized method for HEN synthesis using stochastic optimization - II. Synthesis of cost-optimal networks. Computers & Chemical Engineering 22 (1998) 1387–1405.
[18] B. Lin, D.C. Miller, Solving heat exchanger network synthesis problems with Tabu search. Computers & Chemical Engineering 28 (2004) 1451–1464.
[19] A. Pariyani, A. Gupta, P. Ghosh, Design of heat exchanger networks using randomized algorithm. Computers & Chemical Engineering 30 (2006) 1046-1053.
[20] M.A.S.S. Ravagnani, A.P. Silva, P.A. Arroyo, A.A. Constantino, Heat exchanger network synthesis and optimisation using genetic algorithm. Applied Thermal Engineering 25 (2005) 1003–1017.
[21] J. Jezowski, R. Bochenek, G. Poplewski, On application of stochastic optimization techniques to designing heat exchanger- and water networks. Chemical Engineering and Processing 46 (2007) 1160–1174.
[22] J. Dipama, A. Teyssedou, M. Sorin, Synthesis of heat exchanger networks using genetic algorithms. Applied Thermal Engineering 28 (2008) 1763–1773.
[23] K.M. Yerramsetty, C.V.S. Murty, Synthesis of cost-optimal heat exchanger networks using differential evolution. Computers & Chemical Engineering 32 (2008) 1861–1876.
[24] J.M. Ponce-Ortega, M. Serna-Gonzalez, A. Jimenez-Gutierrez, Synthesis of multipass heat exchanger networks using genetic algorithms. Computers & Chemical Engineering 32 (2008) 2320–2332.
[25] X. Luo, Q.-Y. Wen, G. Fieg, A hybrid genetic algorithm for synthesis of heat exchanger networks. Computers & Chemical Engineering (2008), doi:10.1016/j.compchemeng.2008.12.003
[26] R.M. Khorasany, M. Fesanghary, A novel approach for synthesis of cost-optimal heat exchanger networks. Computers & Chemical Engineering (2008), doi:10.1016/j.compchemeng.2008.12.004
[27] R.K.C. Mehta, S.K. Devalkar, S. Narasimhan, An optimization approach for evolutionary synthesis of heat exchanger networks. Chemical Engineering Research and Design Part A 79 (2001) 143-150
[28] N. Deo, Graph theory and applications to engineering and computer science, Prentice Hall, New Jersey, 1974.
[29] J.M. Zamora, I.E. Grossmann, A global MINLP optimization algorithm for the synthesis of heat exchanger networks with no stream splits. Computers & Chemical Engineering 22 (1998) 367-384.
[30] T.F. Yee, I.E. Grossmann, Z. Kravanja, Simultaneous optimization models for heat integrations - II. Heat exchanger network synthesis. Computers & Chemical Engineering 14 (1990) 1165-1184.
[31] B. Linnhoff, S. Ahmad, Cost optimum heat exchanger networks – 1. Minimum energy and capital using simple models for capital cost. Computers & Chemical Engineering 14 (1990) 729–750.
[32] X.X. Zhu, B.K. O'Neill, J.R. Roach, R.M. Wood, A method for automated heat exchanger network synthesis using block decomposition and non-linear optimization. Chemical Engineering Research and Design Part A 73 (1995) 919–930.
[33] S. Chakraborty, P. Ghosh, Heat exchanger network synthesis: the possibility of randomization. Chemical Engineering Journal 72 (1999) 209-216.
[34] J.R. Flower, B. Linnhoff, Synthesis of heat exchanger networks: II. Evolutionary generation of networks with various criteria of optimality. AIChE Journal 24 (1978) 642-654.

ACCEPTED MANUSCRIPT

ACCEPTED MANUSCRIPT

[35] D.R. Lewin, H. Wang, O. Shalev, A generalized method for HEN synthesis using stochastic optimization - I. General framework and MER optimal synthesis. Computers & Chemical Engineering 22 (1998) 1503–1513.

ACCEPTED MANUSCRIPT

ACCEPTED MANUSCRIPT

FIGURE CAPTIONS

Figure 1 – An example of the stagewise superstructure suggested in [14] for a network with two hot and three cold streams.

Figure 2 – Scheme of the proposed two-level hybrid algorithm.

Figure 3 – A simple HEN and its RG.

Figure 4 – Examples of the effects of the three mutation operators on network topology.

Figure 5 – Insertion and deletion of heat exchanger sides in the RG.

Figure 6 – The EG of the simple HEN in Figure 3 and its independent cycles.

Figure 7 - The solution to the 4SP problem found by the proposed algorithm (temperatures [K] in normal font and heat exchanger loads [kW] in italics).

Figure 8 - The solution to the 6SP problem found by the proposed algorithm (temperatures [K] in normal font and heat exchanger loads [kW] in italics).

Figure 9 - The solution to the 6SP problem found by the proposed algorithm without the constraint on ΔT_{min} (temperatures [K] in normal font and heat exchanger loads [kW] in italics).

Figure 10 - The solution to the Aromatics Plant problem found by the proposed algorithm (temperatures [°C] in normal font and heat exchanger loads [kW] in italics).

Figure 11 - A near optimal solution to the Aromatics Plant problem found by the proposed algorithm (temperatures [°C] in normal font and heat exchanger loads [kW] in italics).

Figure 12 - The solution to the 10SP1 problem found by the proposed algorithm (temperatures [K] in normal font and heat exchanger loads [kW] in italics).

Table 1 – 4SP problem data [29].

Table 2 - A comparison among the solutions to the 4SP problem.

Table 3 – 6SP problem data [17].

Table 4 - A comparison among the solutions to the 6SP problem.

Table 5 – Aromatics Plant problem data [31].

Table 6 - A comparison among the solutions to the Aromatics Plant problem.

Table 7 – 10SP1 problem data [34].

Table 8 - A comparison among the solutions to the 10SP1 problem.

ACCEPTED MANUSCRIPT

ACCEPTED MANUSCRIPT

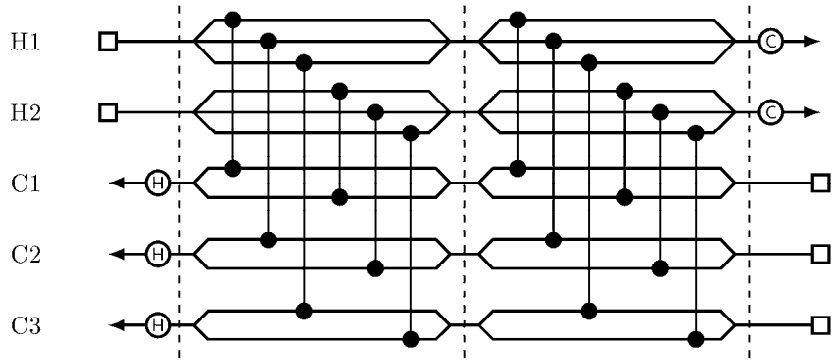

Figure 1 – An example of the stagewise superstructure suggested in [14] for a network with two hot and three cold streams.

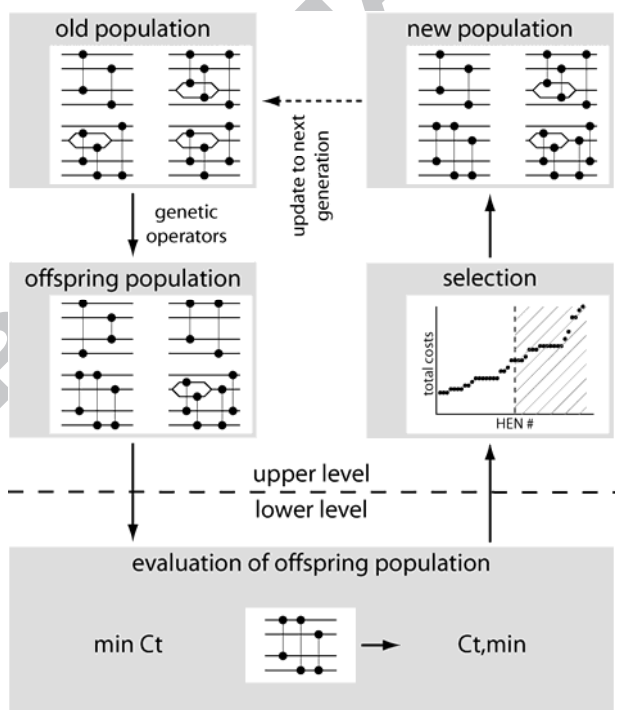

Figure 2 – Scheme of the proposed two-level hybrid algorithm.

ACCEPTED MANUSCRIPT

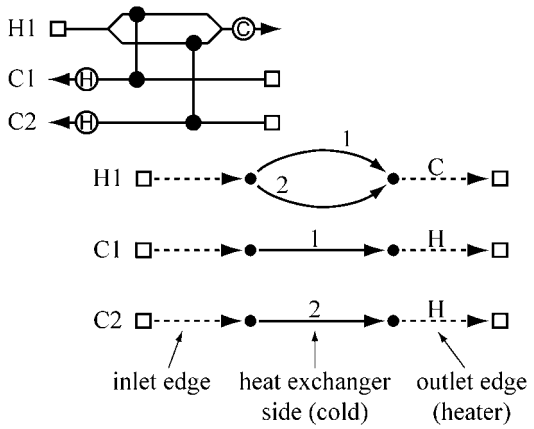

Figure 3 – A simple HEN and its RG.

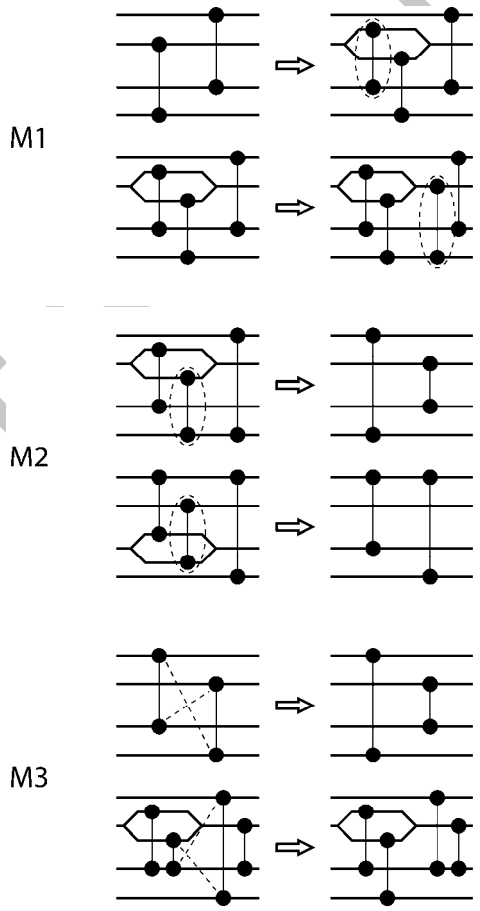

Figure 4 – Examples of the effects of the three mutation operators on network topology.

ACCEPTED MANUSCRIPT

Figure 5 – Insertion and deletion of heat exchanger sides in the RG.

ACCEPTED MANUSCRIPT

ACCEPTED MANUSCRIPT

Figure 6 – The EG of the simple HEN in Figure 3 and its independent cycles.

ACCEPTED MANUSCRIPT

ACCEPTED MANUSCRIPT

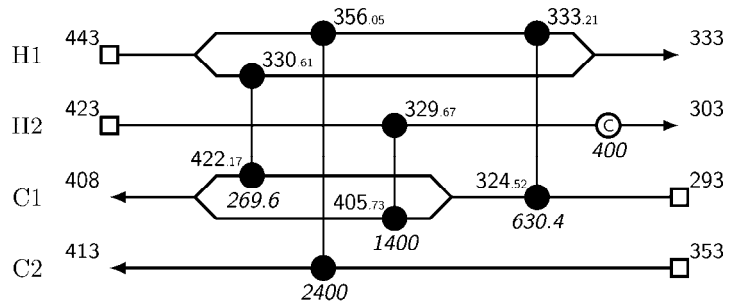

Figure 7 - The solution to the 4SP problem found by the proposed algorithm (temperatures [K] in normal font and heat exchanger loads [kW] in italics).

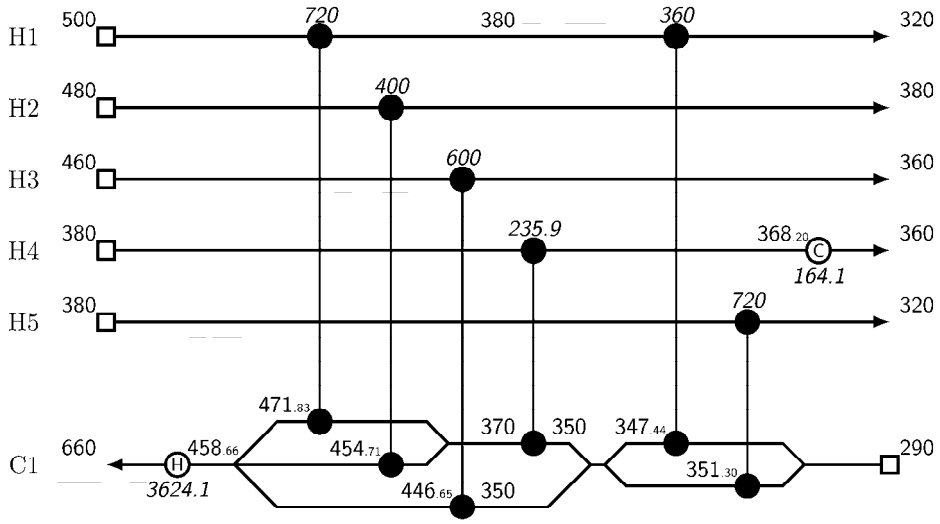

Figure 8 - The solution to the 6SP problem found by the proposed algorithm (temperatures [K] in normal font and heat exchanger loads [kW] in italics).

ACCEPTED MANUSCRIPT

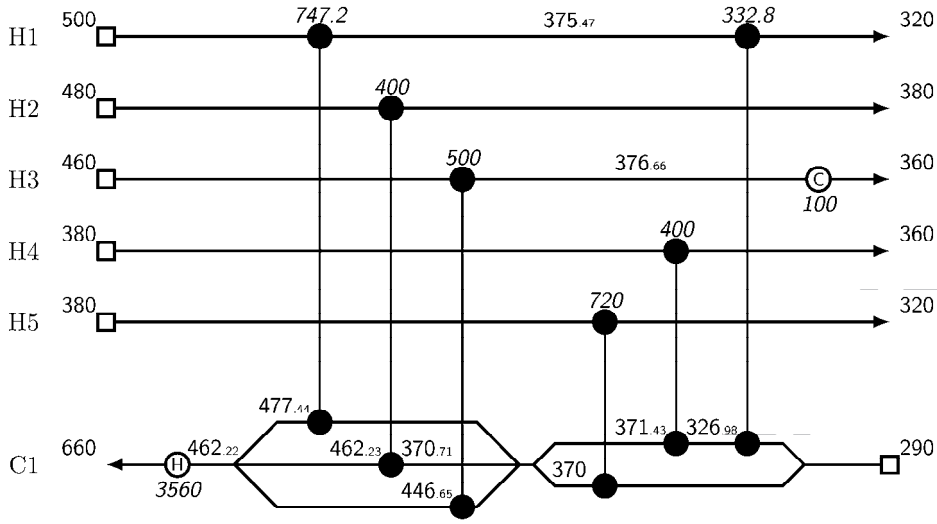

Figure 9 - The solution to the 6SP problem found by the proposed algorithm without the constraint on ΔT_{min} (temperatures [K] in normal font and heat exchanger loads [kW] in italics).

Figure 10 - The solution to the Aromatics Plant problem found by the proposed algorithm (temperatures [°C] in normal font and heat exchanger loads [kW] in italics).

ACCEPTED MANUSCRIPT

Figure 11 - A near optimal solution to the Aromatics Plant problem found by the proposed algorithm (temperatures [°C] in normal font and heat exchanger loads [kW] in italics).

ACCEPTED MANUSCRIPT

ACCEPTED MANUSCRIPT

Figure 12 - The solution to the 10SP1 problem found by the proposed algorithm (temperatures [K] in normal font and heat exchanger loads [kW] in italics).

ACCEPTED MANUSCRIPT

ACCEPTED MANUSCRIPT

Table 1 – 4SP problem data [29].

Stream	T_i [K]	T_e [K]	FC_P	h
H1	443	333	30	-
H2	423	303	15	-
C1	293	408	20	-
C2	353	413	40	-
Steam	450	450	-	-
Water	293	313	-	-

ΔT_{min} [K] = 0.1 ;
U [kW/m^{2}K] = 0.8 for all matches except those involving steam;
U [kW/m^{2}K] = 1.2 for matches involving steam;
C_{EX} [\$/y] = 6250+83.26 S for exchangers and coolers;
C_{EX} [\$/y] = 6250+99.91 S for heaters;
c_{HU} [\$/kWy] = 80 (steam cost);
c_{CU} [\$/kWy] = 20 (water cost).

Table 2 - A comparison among the solutions to the 4SP problem.

Method	n_{EX}	ΣQ_{HU} [kW]	ΣQ_{CU} [kW]	C_t [\$/y]
Ref. [29]	5	0	400	87236
Ref. [19]	6	0	400	85307
Ref. [23]	6	0	400	84222
This work	5	0	400	82363

ACCEPTED MANUSCRIPT

ACCEPTED MANUSCRIPT

Table 3 – 6SP problem data [17].

Stream	T_i [K]	T_e [K]	FC_P	h
H1	500	320	6	-
H2	480	380	4	-
H3	460	360	6	-
H4	380	360	20	-
H5	380	320	12	-
C1	290	660	18	-
Steam	700	700	-	-
Water	300	320	-	-

ΔT_{min} [K] = 10 ;
U [kW/m^{2}K] = 1.0 for all matches;
C_{EX} [\$/y] = 1200 $S^{0.6}$ for all exchangers;
c_{HU} [\$/kWy] = 140 (steam cost);
c_{CU} [\$/kWy] = 10 (water cost).

Table 4 - A comparison among the solutions to the 6SP problem.

Method	n_{EX}	ΣQ_{HU} [kW]	ΣQ_{CU} [kW]	C_t [k\$/y]
Ref. [30]	7	3676	216	576.6
Ref. [17]	9	3620	160	574.8
This work	8	3624	164	573.2
Ref. [26]*	8	3557	97	572.5
Ref. [25]*	8	3559	99	571.7
This work*	8	3560	100	570.9

* without the constraint on ΔT_{min}

ACCEPTED MANUSCRIPT

ACCEPTED MANUSCRIPT

Table 5 – Aromatics Plant problem data [31].

Stream	T_i [°C]	T_e [°C]	FC_P	h
H1	327	40	100	0.50
H2	220	160	160	0.40
H3	220	60	60	0.14
H4	160	45	400	0.30
C1	100	300	100	0.35
C2	35	164	70	0.70
C3	85	138	350	0.50
C4	60	170	60	0.14
C5	140	300	200	0.60
Hot oil	330	250	-	0.50
Water	15	30	-	0.50

ΔT_{min} [K] = 10 ;
C_{EX} [\$/y] = 2000+70 S
c_{HU} [\$/kWy] = 60 (oil cost);
c_{CU} [\$/kWy] = 6 (water cost);

Table 6 - A comparison among the solutions to the Aromatics Plant problem.

Method	n_{EX}	ΣQ_{HU} [MW]	ΣQ_{CU} [MW]	C_t [k\$/y]
Ref. [32]	14	26.2	33.9	2970
Ref. [33]	12	25.9	33.6	2970
Ref. [31]	13	25.3	33.0	2960
Ref. [17]	11	25.7	33.4	2946
Ref. [23]	15	25.9	33.6	2942
Ref. [25]	14	23.6	31.3	2922
This work	15	23.7	31.4	2920

ACCEPTED MANUSCRIPT

ACCEPTED MANUSCRIPT

Table 7 – 10SP1 problem data [34].

Stream	T_i [K]	T_e [K]	FC_P	h
H1	433	366	8.79	-
H2	522	411	10.55	-
H3	544	422	12.56	-
H4	500	339	14.77	-
H5	472	339	17.73	-
C1	355	450	17.28	-
C2	366	478	13.90	-
C3	311	494	8.44	-
C4	333	433	7.62	-
C5	389	495	6.08	-
Steam	509	509	-	-
Water	311	355	-	-

ΔT_{min} [K] = 10 ;
U [kW/m^{2}K] = 0.852 for all matches except those involving steam;
U [kW/m^{2}K] = 1.136 for matches involving steam;
C_{EX} [\$/y] = 145.63 $S^{0.6}$
c_{HU} [\$/kWy] = 37.64 (steam cost);
c_{CU} [\$/kWy] = 18.12 (water cost);

Table 8 - A comparison among the solutions to the 10SP1 problem.

Method	n_{EX}	ΣQ_{HU} [MW]	ΣQ_{CU} [kW]	C_t [\$/y]
Ref. [34]	10	0	1879	43934
Ref. [35]	10	0	1879	43752
Ref. [23]	10	0	1879	43538
Ref. [19]	10	0	1879	43439
Ref. [18]	10	0	1879	43329
This work	10	0	1879	43314

ACCEPTED MANUSCRIPT

ACCEPTED MANUSCRIPT

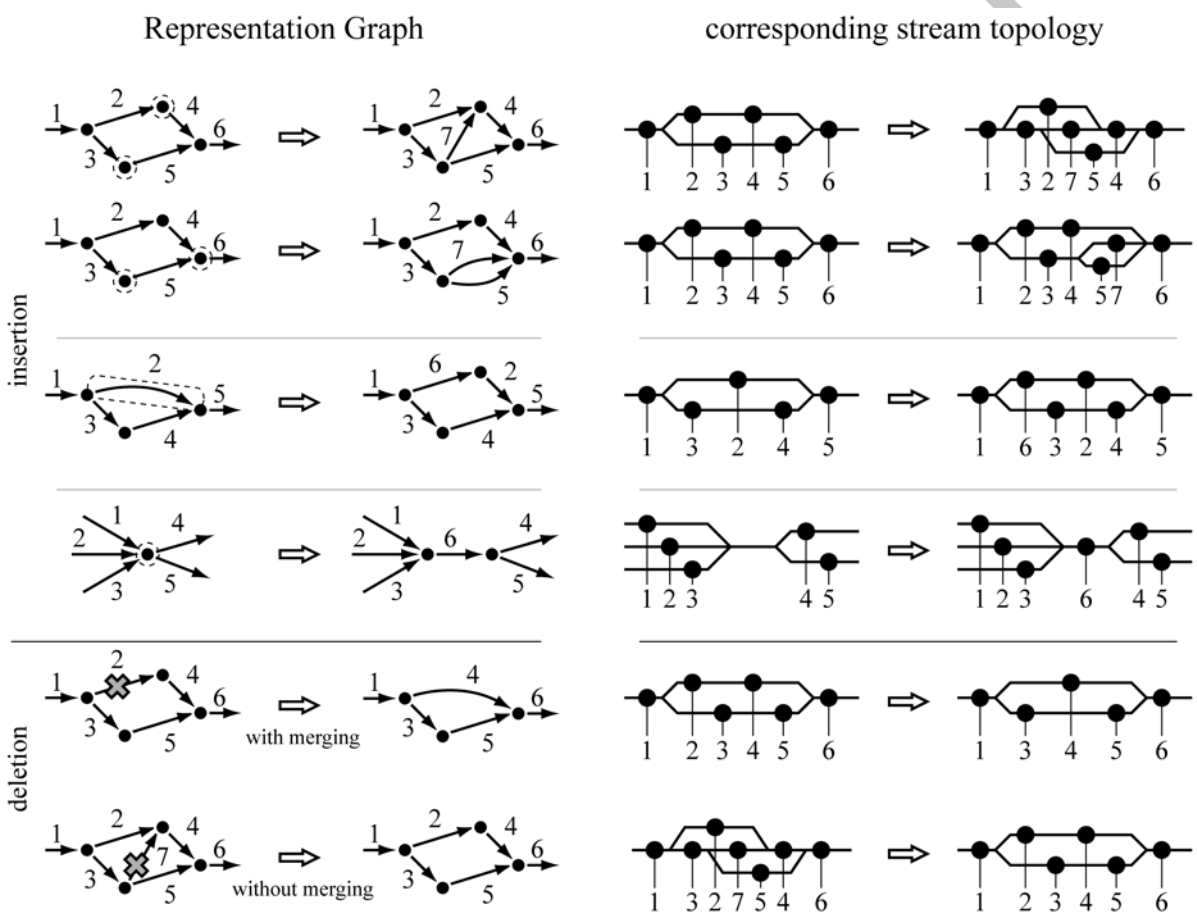

ACCEPTED MANUSCRIPT

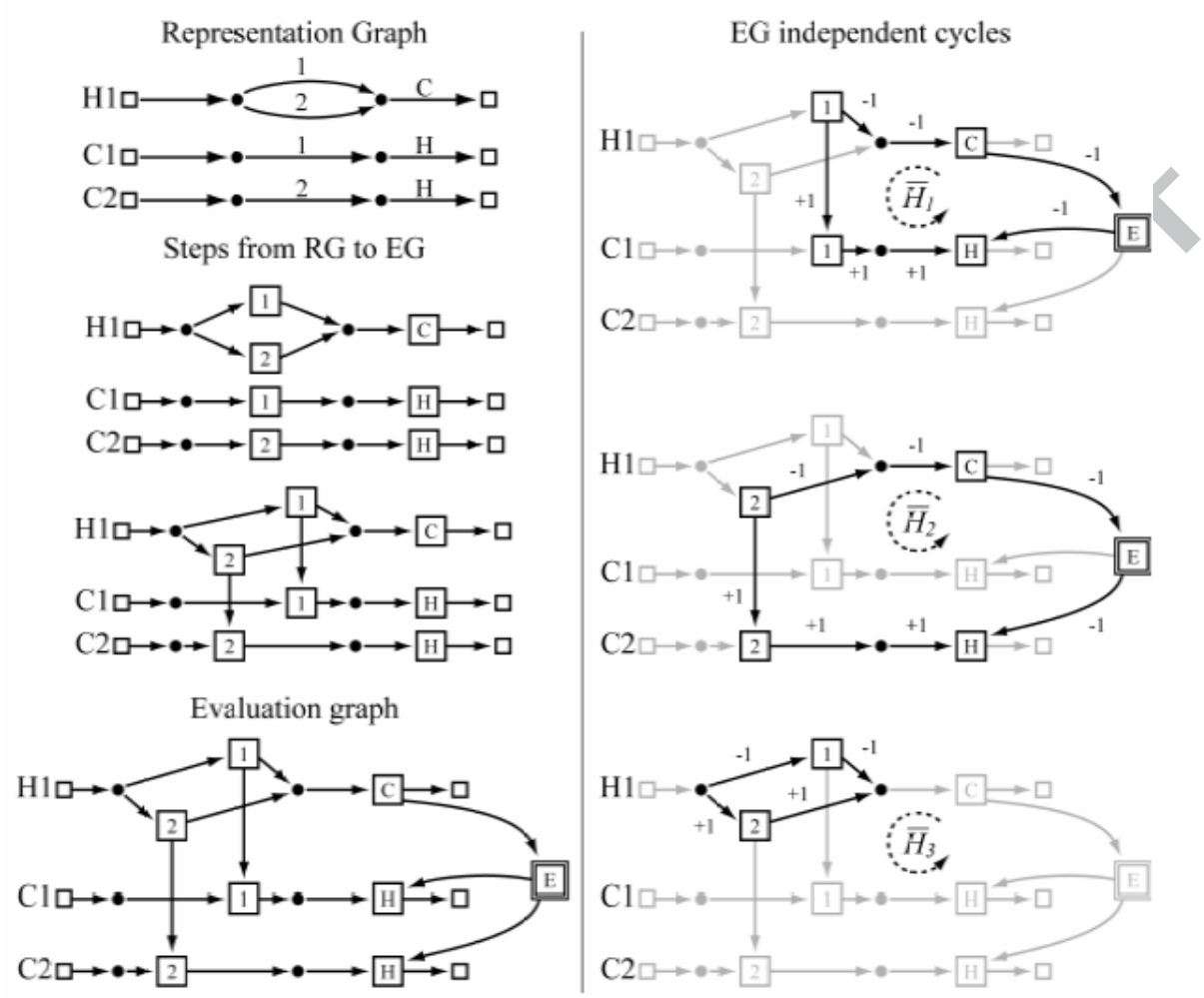

Figure 6

ACCEPTED MANUSCRIPT

Figure 10

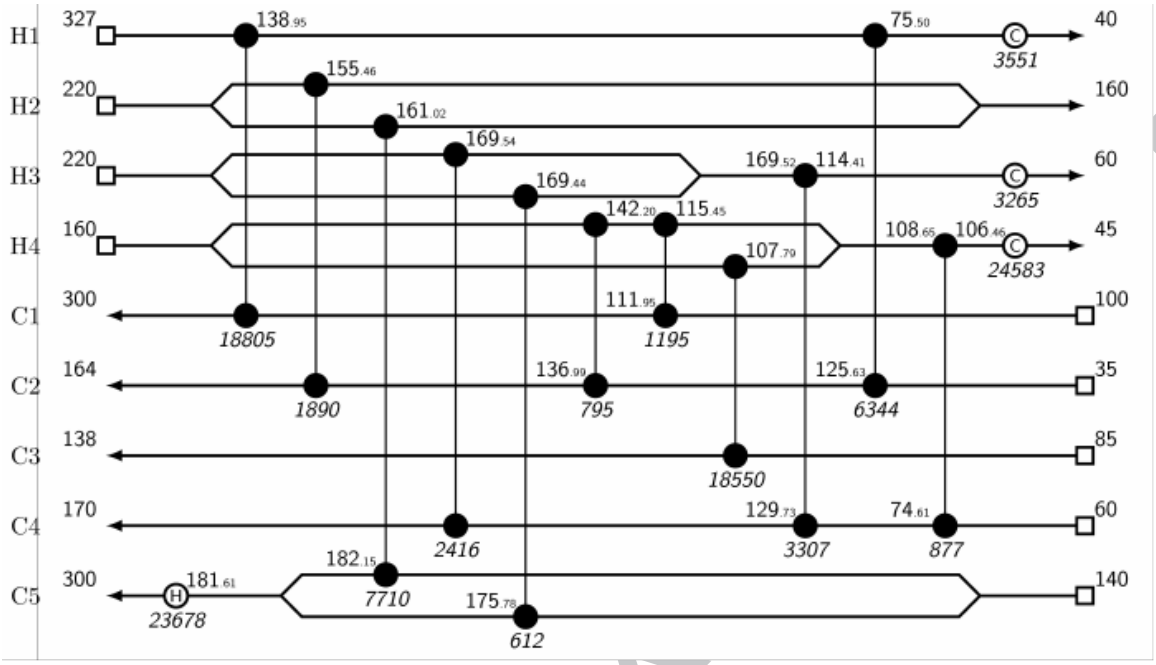

ACCEPTED MANUSCRIPT

ACCEPTED MANUSCRIPT

Figure 11

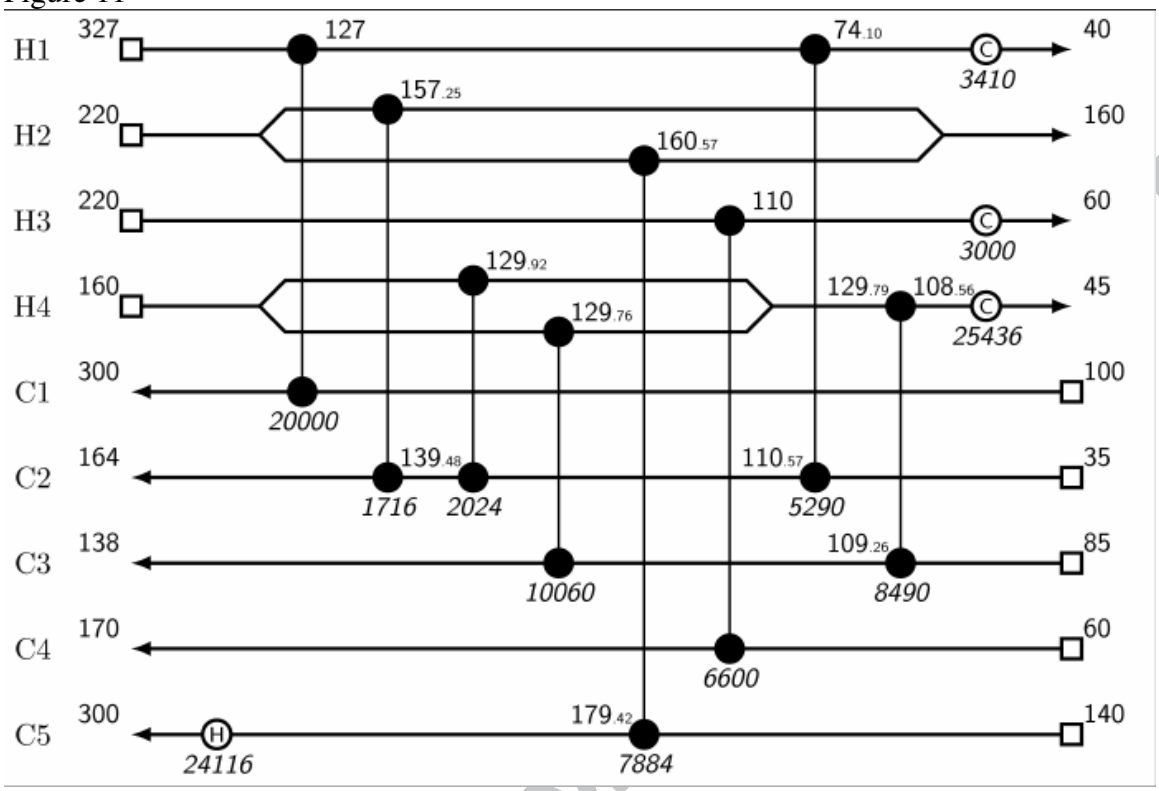

ACCEPTED MANUSCRIPT

ACCEPTED MANUSCRIPT

Figure 12

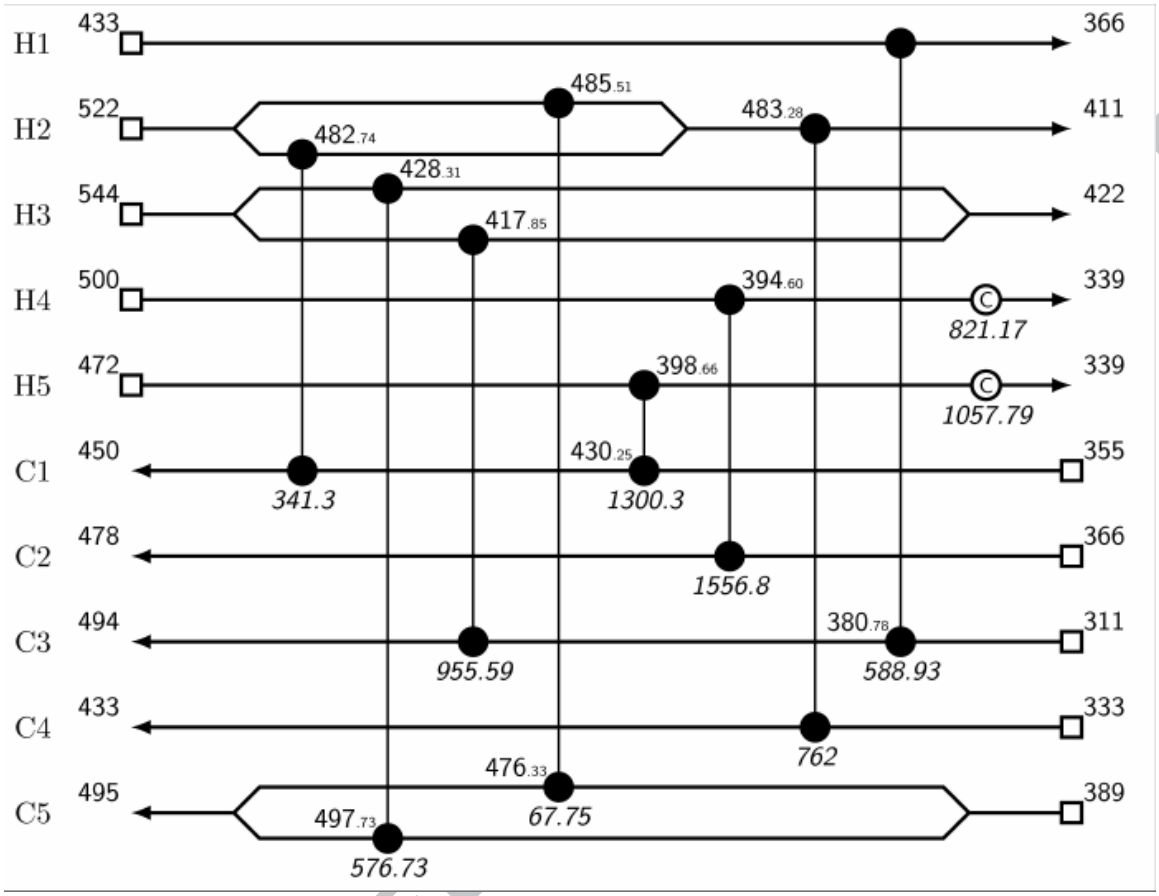

ACCEPTED